









Chelsea® Power Take-Off

Applications Catalog

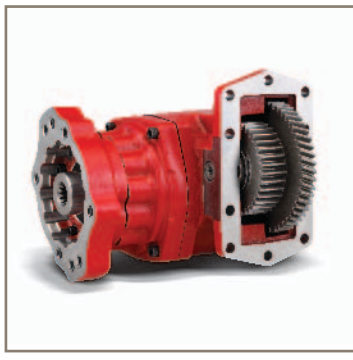

Parker Chelsea

ENGINEERING YOUR SUCCESS.

⚠ WARNING — User Responsibility

FAILURE OR IMPROPER SELECTION OR IMPROPER USE OF THE PRODUCTS DESCRIBED HEREIN OR RELATED ITEMS CAN CAUSE DEATH, PERSONAL INJURY AND PROPERTY DAMAGE.

This document and other information from Parker-Hannifin Corporation, its subsidiaries and authorized distributors provide product or system options for further investigation by users having technical expertise.

The user, through its own analysis and testing, is solely responsible for making the final selection of the system and components and assuring that all performance, endurance, maintenance, safety and warning requirements of the application are met. The user must analyze all aspects of the application, follow applicable industry standards, and follow the information concerning the product in the current product catalog and in any other materials provided from Parker or its subsidiaries or authorized distributors.

To the extent that Parker or its subsidiaries or authorized distributors provide component or system options based upon data or specifications provided by the user, the user is responsible for determining that such data and specifications are suitable and sufficient for all applications and reasonably foreseeable uses of the components or systems.

Offer of Sale

The items described in this document are hereby offered for sale by Parker Hannifin Corporation, its subsidiaries or its authorized distributors. This offer and its acceptance are governed by the provisions stated in the "Offer of Sale".

© Copyright 2016, Parker Hannifin Corporation, All Rights Reserved

Parker Hannifin Corporation
Chelsea Products Division
Olive Branch, MS 38654 USA

General Safety Information ..... Pages 1.1 thru 1.16

Proper Matching of PTO 1.1
Rotating Auxiliary Driveshafts 1.2
Pump Installation Precautions 1.3
Direct Mount Pump Support Requirements ..... 1.4 thru 1.9
How to Use the Catalog ..... 1.10 thru 1.13
Power Take-Off Worksheet 1.14
Transmission Opening Chart 1.15
Input Gear Designators 1.16

Section 1

PTO Options & Kits ..... Pages 2.1 thru 2.44

Mechanical 6-Bolt PTOs ..... 2.1 thru 2.6
Mechanical 8-Bolt PTOs ..... 2.7 thru 2.13
Mechanical Rear Mount 2.14
PowerShift Hydraulic 6-Bolt PTOs ..... 2.15 thru 2.16
PowerShift Pneumatic or Hydraulic 6/8-Bolt PTOs ..... 2.17 thru 2.19
PowerShift 8-Bolt PTOs 2.20
PowerShift Hydraulic 10-Bolt PTOs ..... 2.21 thru 2.22
Constant Mesh 10-Bolt PTOs ..... 2.23 thru 2.24
PowerShift Rear Mount PTOs 2.25
Split Shaft Gear Boxes 2.26
Crankshaft Driven ..... 2.27 thru 2.28
Geared Adapters ..... 2.29 thru 2.37
Kits ..... 2.38 thru 2.41
PTO Shift Options 2.42
Pumps 2.43

Section 2

Flange Dimensions ..... Pages 3.1 thru 3.48

This section can be used for quick reference of flange dimensions.

Section 3

Assembly Options ..... Pages 4.1 thru 4.42

This section can be used for quick reference to PTO options or ordering units.

Section 4

Applications ..... Pages 5.1.1 thru 5.15.9

This section contains the latest Transmission/PTO application information by Transmission Manufacturer.

Offer of Sale ..... Page 5.16.1

Section 5

Parker Hannifin Corporation
Chelsea Products Division
Olive Branch, MS 38654 USA

Parker Hannifin Corporation
Chelsea Products Division
Olive Branch, MS 38654 USA

GENERAL SAFETY INFORMATION



Parker Chelsea

ENGINEERING YOUR SUCCESS.

Parker Hannifin Corporation
Chelsea Products Division
Olive Branch, MS 38654 USA

General Safety Information.....1.1 thru 1.18
Proper Matching of PTO.....1.1
Rotating Auxiliary Driveshafts.....1.2
Pump Installation Precautions.....1.3
Direct Mount Pump Support Requirements.....1.4 thru 1.9
How to Use the Catalog.....1.10 thru 1.13
Power Take-Off Worksheet.....1.14
Transmission Opening Chart.....1.15
Input Gear Designators.....1.16

Parker Hannifin Corporation
Chelsea Products Division
Olive Branch, MS 38654 USA

Parker Hannifin Corporation
Chelsea Products Division
Olive Branch, MS 38654 USA

Safety

The following instructions are for your safety and the safety of the end user. Read them carefully and make sure you understand them thoroughly.

To Prevent Injury to Yourself and/or Damage to the Equipment:

- Read carefully all owner's manuals, service manuals, and/or other instructions.
- Always follow proper procedures, and use proper tools and safety equipment.
- Be sure to receive proper training.
- Never work alone while under a vehicle or while repairing or maintaining equipment.
- Always use proper components in applications for which they are approved.
- Be sure to assemble components properly.
- Never use worn-out or damaged components.
- Always block any raised or moving device that may injure a person working on or under a vehicle.
- Never operate the controls of the Power Take-Off (PTO) or other driven equipment from any position that could result in getting caught in the moving machinery.

Proper Matching of PTO

WARNING: A Power Take-Off must be properly matched to the vehicle transmission and to the auxiliary equipment being powered. An improperly matched Power Take-Off could cause severe damage to the vehicle transmission, the auxiliary driveshaft, and/or the auxiliary equipment being powered. Damaged components or equipment could malfunction causing serious personal injury to the vehicle operator or to others nearby.

To avoid personal injury and/or equipment damage:

- Always refer to Chelsea catalogs, literature, and owner's manuals and follow Chelsea recommendations when selecting, installing, repairing, or operating a Power Take-Off.
- Never attempt to use a Power Take-Off not specifically recommended by Chelsea for the vehicle transmission.
- Always match the Power Take-Offs specified output capabilities to the requirements of the equipment to be powered.
- Never use a Power Take-Off whose range of speed could exceed the maximum safe speed of the equipment to be powered.

Cold Weather Operation of PowerShift PTOs

WARNING: During extreme cold weather operation [32°F (0°C) and lower], a disengaged PowerShift Power Take-Off can momentarily transmit high torque that will cause unexpected output shaft rotation. This is caused by the high viscosity of the transmission oil when it is extremely cold. As slippage occurs between the Power Take-Off clutch plates, the oil will rapidly heat up and the viscous drag will quickly decrease.

The Power Take-Off output shaft rotation could cause unexpected movement of the driven equipment resulting in serious personal injury, death, or equipment damage.

To avoid personal injury and/or equipment damage:

- Driven equipment must have separate controls.
- The driven equipment must be left in the disengaged position when not in operation.
- Do not operate the driven equipment until the vehicle is allowed to warm up.

This symbol warns of possible personal injury.

Parker Hannifin Corporation
Chelsea Products Division
Olive Branch, MS 38654 USA

Safety

Rotating Auxiliary Driveshafts

WARNING: Rotating auxiliary driveshafts are dangerous. You can snag clothes, skin, hair, hands, etc. This can cause serious injury or death.

- Do not go under the vehicle when the engine is running.
- Do not work on or near an exposed shaft when the engine is running.
- Shut off the engine before working on the Power Take-Off or driven equipment.
- Exposed rotating driveshafts must be guarded.

Guarding Auxiliary Driveshafts

WARNING: We strongly recommend that a Power Take-Off and a directly mounted pump be used to eliminate the auxiliary driveshaft whenever possible. If an auxiliary driveshaft is used and remains exposed after installation, it is the responsibility of the vehicle designer and PTO installer to install a guard.

Using Set Screws

WARNING: Auxiliary driveshafts may be installed with either recessed or protruding set screws. If you choose a square head set screw, you should be aware that it will protrude above the hub of the yoke and may be a point where clothes, skin, hair, hands, etc. could be snagged. A socket head set screw, which may not protrude above the hub of the yoke, does not permit the same amount of torquing as does a square head set screw. Also a square head set screw, if used with a lock wire, will prevent loosening of the screw caused by vibration. Regardless of the choice made with respect to a set screw, an exposed rotating auxiliary driveshaft must be guarded.

Important: Safety Information and Owner's Manual

Chelsea Power Take-Offs are packaged with safety information decals, instructions, and an owner's manual. These items are located in the envelope with the PTO mounting gaskets. Also, safety information and installation instructions are packaged with some individual parts and kits. Be sure to read the owner's manual and safety information before installing or operating the PTO. Always install the safety information decals according to the instructions provided. Place the owner's manual in the vehicle glove compartment.

Operating the PTO with the Vehicle in Motion

WARNING: Some Power Take-Offs may be operated when the vehicle is in motion. To do so, the PTO must have been properly selected to operate at highway speeds and correctly matched to the vehicle transmission and the requirements of the driven equipment.

If in doubt about the PTOs specifications and capabilities, avoid operating the PTO when the vehicle is in motion. Improper application and / or operation can cause serious personal injury or premature failure of the vehicle, the driven equipment, and / or the PTO

Always remember to disengage the PTO when the driven equipment is not in operation.

This symbol warns of possible personal injury.

Pump Installation Precautions

Use a bracket to support the pump to the transmission if:

- The combined weight of pump, fittings and hose exceed 40 pounds [18.14 kg].
- The combined length of the PTO and pump is **18 inches** or more from the PTO centerline to the end of the pump.

ALSO: Remember to pack the female PTO shaft with grease before installing the pump on the PTO. It is the responsibility of the installer to ensure the PTO / Pump are properly supported. See pages 1.4 - 1.9 for more information.

Power Take-Off Maintenance

Due to the normal and sometime severe torsional vibrations that Power Take-Off units experience, operators should follow a set maintenance schedule for inspections. Failure to service loose bolts or Power Take-Off leaks could result in potential auxiliary Power Take-Off or transmission damage.

Periodic PTO MAINTENANCE is required by the owner/operator to ensure proper, safe, and trouble free operation.

Daily: Check all air, hydraulic and working mechanisms before operating PTO. Perform maintenance as required.

Monthly: Inspect for possible leaks and tighten all air, hydraulic, and mounting hardware, if necessary. Torque all bolts, nuts, etc. to Chelsea specifications. Ensure that splines are properly lubricated, if applicable. Perform maintenance as required.

With regards to the direct mounted pump splines, the PTO requires the application of a specially formulated anti-fretting, high pressure, high temperature grease. The addition of the grease has been proven to reduce the effects of the torsional vibrations, which result in fretting corrosion on the PTO internal splines as well as the pump external splines. Fretting corrosion appears as a “rusting and wearing” of the pump shaft splines. Severe duty applications, which require long PTO running times and high torque may require more frequent regreasing. Applications such as Utility Trucks that run continuously and are lightly loaded also require frequent regreasing due to the sheer hours of running time. It is important to note that service intervals will vary for each and every application and is the responsibility of the end user of the product. Chelsea also recommends that you consult your pump owner’s manuals and technical services for their maintenance guidelines. Fretting corrosion is caused by many factors and without proper maintenance the anti-fretting grease can only reduce its effectiveness on components.

Chelsea offers the grease to our customers in two packages. The first is a 5/8 fluid ounce tube (379688), which is included with every applicable PTO, and the second is a 14-ounce grease cartridge (379831). Chelsea also offers greaseable shafts for most output option designators for select PTO Series.

Warranty: Failure to comply entirely with the provisions set forth in the appropriate Owner’s Manual will result in voiding of ALL Warranty consideration.

This symbol warns of possible personal injury.

Direct Mount Pump Support Requirements (Universal)

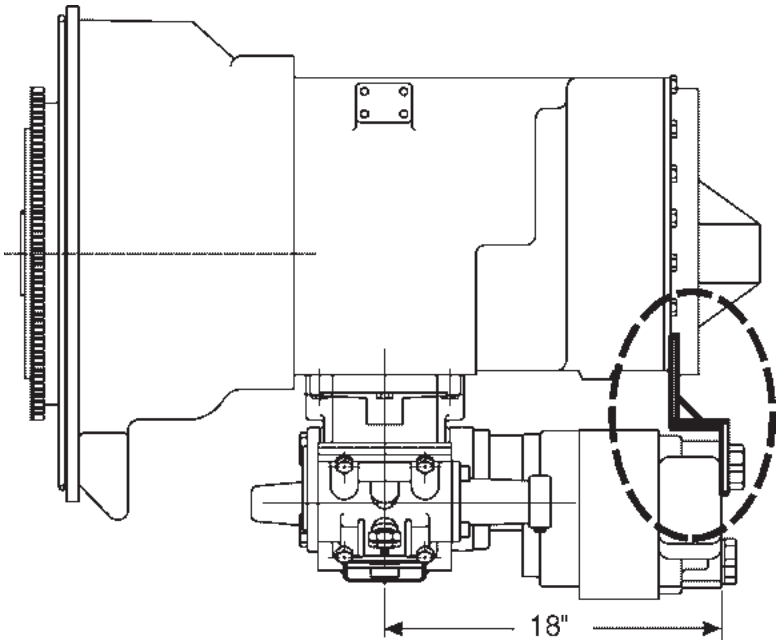

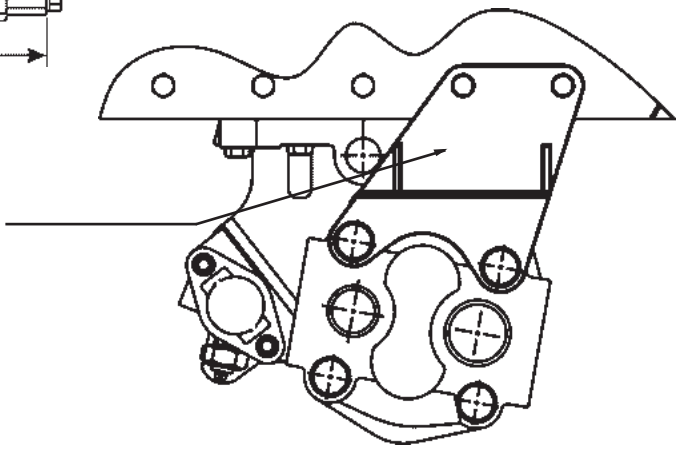

NOTE:
For Proper Bracketing, Attach at 2 or More Transmission Bolt Locations and 2 or More Pump Locations. Contact Transmission Manufacturer for Proper Bracket Mounting Locations.

Use CAUTION to ensure the support bracket does not pre-load pump / PTO mounting. When mounting the pump, it should be fully supported by a jack until the support bracket is secured in place, then the jack can be released. This will make sure the PTO is not being stressed by the bracket.

Chelsea requires the use of pump supports (Support Brackets) in all applications to ensure the Maximum Bending Moment (MBM) of the PTO / Pump assembly is not exceeded. Exceeding the MBM can result in damage to PTO, transmission, driven equipment, and / or personnel. It is the responsibility of the installer to ensure that adequate support is implemented. All applications are unique and it is important to consider all parameters in designing a proper support bracket.

PTO warranty will be void if a pump bracket is not used when one of the following conditions are present:

1. The combined weight of pump, fittings and hose exceed 40 pounds [18.14 kg].

2. The combined length of the PTO and pump is 18 inches [45.72 cm] or more from the PTO centerline to the end of the pump.

ALSO: Remember to pack the female PTO shaft with grease before installing the pump on the PTO (reference Chelsea grease pack 379688).

This symbol warns of possible personal injury.

Direct Mount Pump Support Requirements (890 Series)

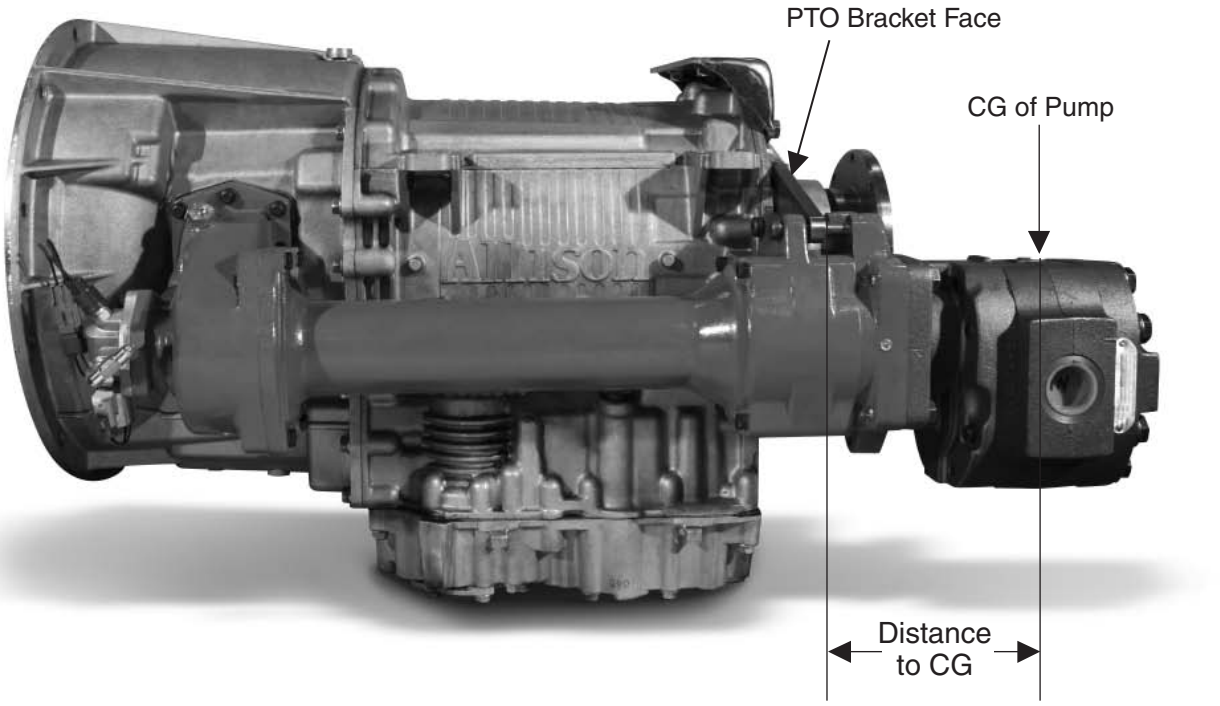

Use CAUTION to ensure that bracket does not pre-load pump / PTO mounting.

Chelsea requires the use of pump support brackets in all applications. PTO warranty will be void if a pump bracket is not used when:

1. Equivalent Bending Moment (EBM) from the pump exceeds 180 lbs-ft (2160 lbs-in).
2. Pump weight exceeds 120 lbs, unless approved by Chelsea Engineering.
3 A center of gravity that exceeds 24" and 2160 lbs-in.

   (Pump Weight [lbs]) x (Distance of CG of pump to PTO Bracket Face) = < 2160 lbs-in

   Example 1: 60 lbs x 18" = 1080 lbs-in (no bracket required)

   Example 2: 120 lbs x 17.9" = 2148 lbs-in (no bracket required)

   Example 3: 90 lbs x 25" = 2250 lbs-in (bracket required)

CG = Center of Gravity

Always refer to current Owners Manual for updated information.

This symbol warns of possible personal injury.

Parker Hannifin Corporation
Chelsea Products Division
Olive Branch, MS 38654 USA

Direct Mount Pump Support Requirements (CAT Series)

If bolts are removed from the CX31 transmission to add mounting brackets, etc. they must be replaced with longer bolts so that thread engagement is maintained. The replacement bolts must be of the same grade and torqued to the required specifications.

Thread engagement length and bolt torques are critical on the Aluminum Case and Cover of the CX Transmissions.

The bolts selected must have a thread engagement length of twice the bolt diameter. Standard torques on short bolts will strip the threads. The bolts must not be too long because the bolts will bottom out and damage the case.

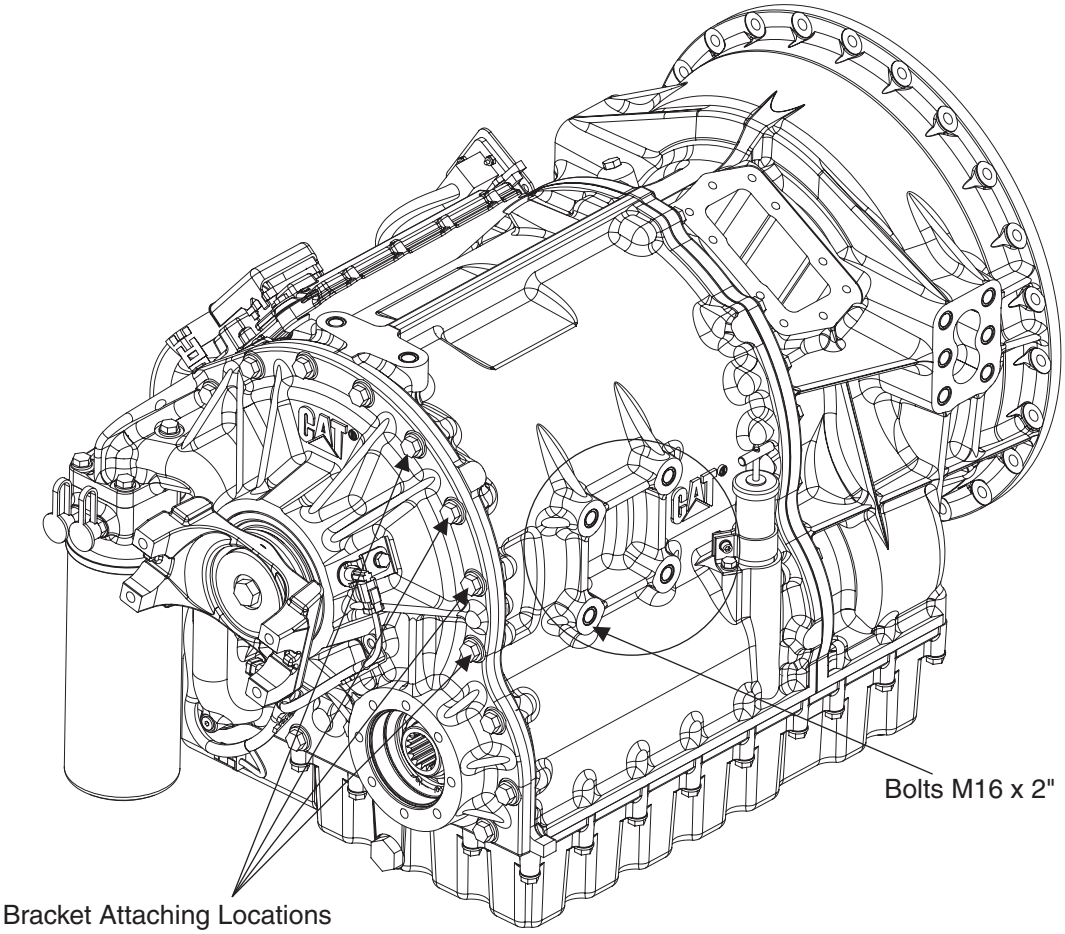

Parker Hannifin Corporation
Chelsea Products Division
Olive Branch, MS 38654 USA

Direct Mount Pump Support Requirements - CX31/35 (CAT-D & CAT-H Series)

Maximum Allowable Bending Moment is 80 Nm (60 lbs-ft) Combined.

From the rear PTO mounting face, maximum bending moment includes PTO, direct mount pump, and unsupported hydraulic lines. Support brackets designed to reduce the bending moment on the rear PTO must insure that the 80 Nm (60 lbs-ft or 720 Lbs. in.) limit cannot be exceeded. See drawing on page 1.7 for bracket support locations.

Calculating bending moment:

Lbs-in = (CGP x PW) + [(LP + CGH) x HPW]

Most measurements will be in inches (in) so we will do the calculation in inches and convert to Pounds Feet (lbs-ft).

CAT-H Example

Lbs-in = (3.74" x 42.5 Lbs.) + [(8.75" + 4") x 22 Lbs.]
= 158.95 + 280.5
= 439.45 Lbs. in. divide by 12"
36.6 lbs-ft Total Bending Moment

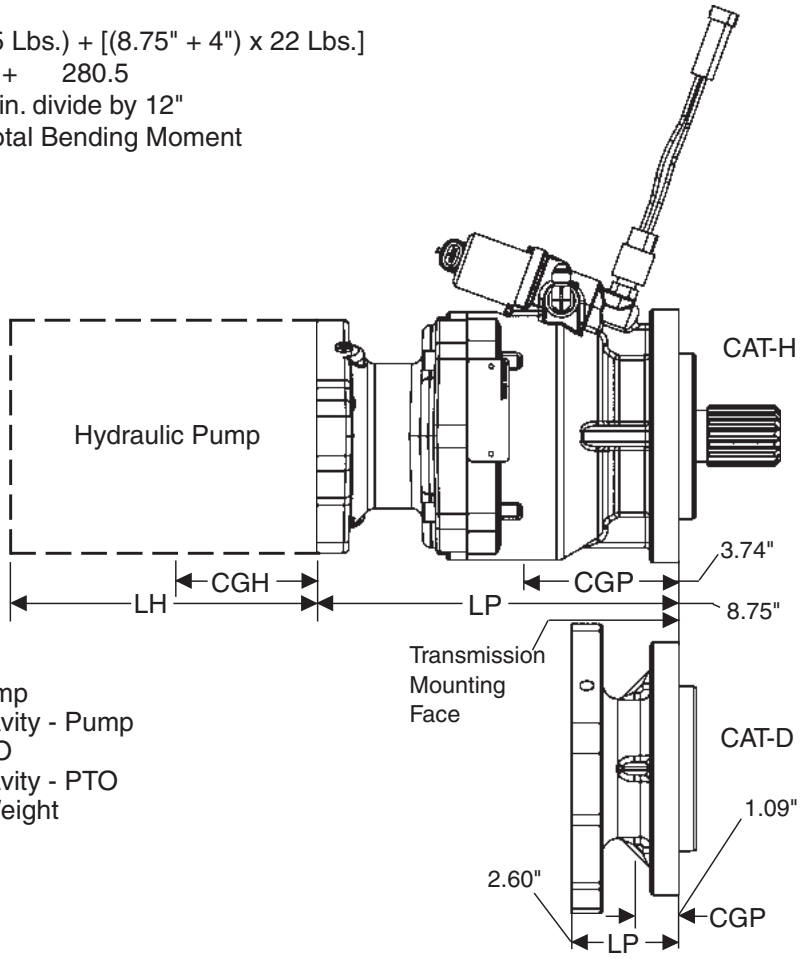

Key:
LH = Length of Pump
CGH = Center of Gravity - Pump
LP = Length of PTO
CGP = Center of Gravity - PTO
HPW = Hyd. Pump Weight
PW = PTO Weight
CAT-H = 42.5 Lbs.
CAT-D = 8.2 Lbs.

NOTE: If pump center of gravity is not known divide LH by 2

Parker Hannifin Corporation
Chelsea Products Division
Olive Branch, MS 38654 USA

Direct Mount Pump Support Requirements - CX31/35 (590 Series)

Chelsea requires the use of pump supports (Support Brackets) in all applications to ensure the Maximum Bending Moment (MBM) of the PTO / Pump assembly is not exceeded. Exceeding the MBM can result in damage to PTO, transmission, driven equipment, and / or personnel. It is the responsibility of the installer to ensure that adequate support is implemented. All applications are unique and it is important to consider all parameters in designing a proper support bracket.

A support bracket is furnished with the 590 Series to reduce the bending stress on the PTO/Transmission attaching points. Mount the bracket as seen in diagram below.

Caterpillar's maximum allowable bending moment without the PTO/Pump bracket is 80 Nm [60 lbs-ft] combined.

The Pump Weight vs Pump Center of Gravity (COG) chart will aid you in determining if your pump application exceeds the recommended pump weight/ COG limits using the supplied bracket.

The chart range for pump weights is 30 to 80 pounds and the pump COG range is from 3 to 12 inches. To use the chart, find your pump weight along the vertical axis and your pump COG along the horizontal axis. As long as you stay within the gray shaded area, your pump weight/COG is within the proper limits. If you exceed the shaded area or are outside the limits of the chart, contact Chelsea Technical Services for assistance 1-662-895-1011.

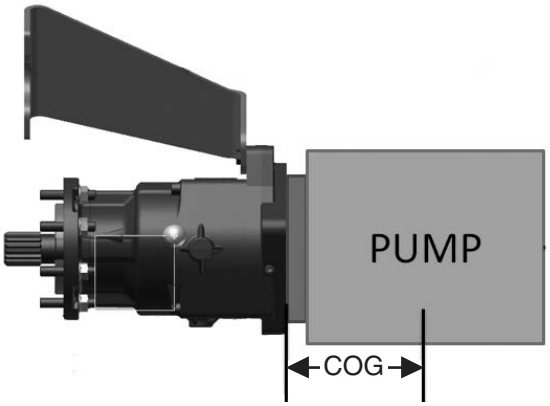

Pump Weight vs Pump Center of Gravity Chart - 590 Series w/Bracket

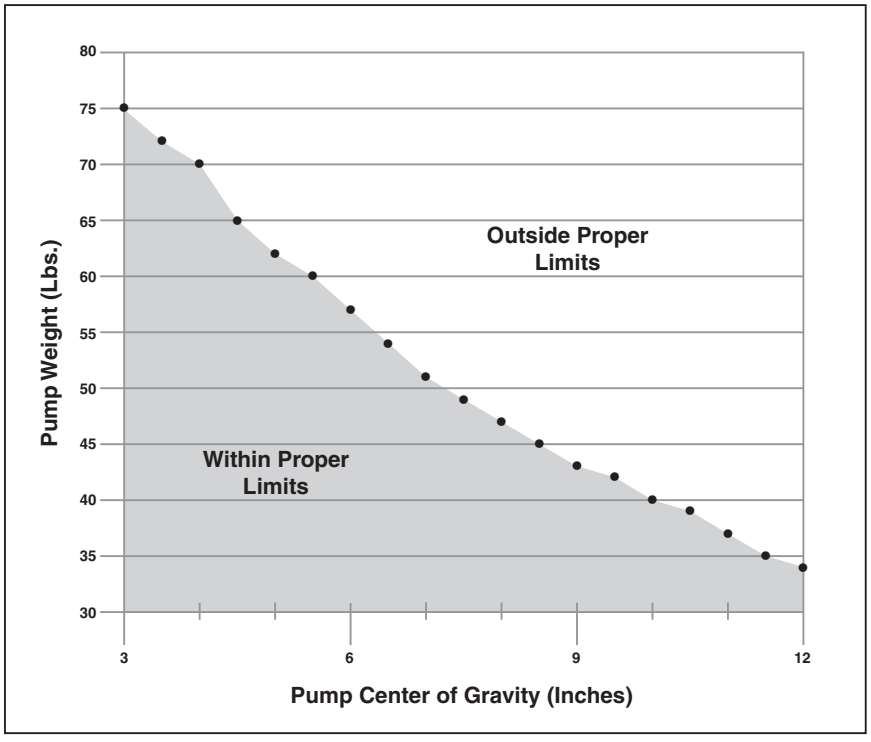

Parker Hannifin Corporation
Chelsea Products Division
Olive Branch, MS 38654 USA

Safety

Direct Mount Pump Support Requirements (511/523 Series)

Pump Installation Pre-calculations – General Rules

Use CAUTION to ensure the support bracket does not pre-load pump / PTO mounting. When mounting the pump, it should be fully supported by a jack until the support bracket is secured in place, then the jack can be released. This will make sure the PTO is not being stressed by the bracket.

Chelsea requires the use of pump supports (Support Brackets) in all applications to ensure the Maximum Bending Moment (MBM) of the PTO / Pump assembly is not exceeded. Exceeding the MBM can result in damage to PTO, transmission, driven equipment, and / or personnel. It is the responsibility of the installer to ensure that adequate support is implemented. All applications are unique and it is important to consider all parameters in designing a proper support bracket.

PTO warranty will be void if a pump bracket is not used when one of the following conditions are present:

1) The combined weight of pump, fittings and hose exceeds 18.1 Kg [40 pounds].
2) The combined length of the PTO and pump is 457 mm [18 inches] or more from the PTO centerline to the end of the pump.

Direct Mount Support Requirements (ZF Meritor FreedomLine™)

Limit - The FreedomLine™ transmission PTO flange will accommodate a maximum combined gravity torque of 37 foot-pound (50 Newton-meter), taking into account all accessories (i.e. PTO, pump, fittings, etc) attached directly to the transmission PTO flange.

PTO Driveshaft Angle – The PTO driveshaft angle must not exceed 7 degrees at the transmission.

Gravity Torque Equation	Parameters
M = s*G 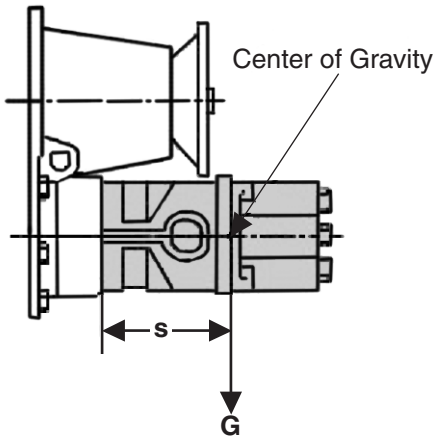 	**G** = Combined weight of all accessories (i.e. PTO, pump, fittings, etc.)
	M = Gravity torque
	s = Distance between the center of gravity of all accessories (i.e. PTO, pump, fittings, etc.) and the flange mounting face

This symbol warns of possible personal injury.

Parker Hannifin Corporation
Chelsea Products Division
Olive Branch, MS 38654 USA

CHELSEA®

EATON FULLER FLR-58

FOM-16D313E-LEP	RTLC-16609E (Convertible 9 to 13 Speed)	RTLO-14918A-AS3
RTAO-10710C-AC	RTLO-12713A	RTLO-14918B
RTAO-10710C-AS	RTLO-13118-AMT	RTLO-14918B-AS
RTAO-12710C-AC	RTLO-14713A	RTLO-16713A
RTAO-12710C-AS	RTLO-14713A-T2	RTLO-16713A-T2
RTAO-14710C-AC	RTLO-14718B	RTLO-16718B
RTAO-14710C-AS	RTLO-14718B-T2	RTLO-16718B-T2
RTAO-16710C-AS	RTLO-14918A-AS2	RTLO-16913L-LHP

BOTTOM SIDE ONLY

TRANSMISSION GEAR DATA:
BOT 08-BOLT Opening Gear FORWARD of Centerline
47 Teeth - SPUR

PITCH LINE TO APERTURE FACE:
0.8050" (20.4500MM)

RIGHT SIDE ONLY

TRANSMISSION GEAR DATA:
R.H. 06-BOLT Opening Gear FORWARD of Centerline
45 Teeth - SPUR

PITCH LINE TO APERTURE FACE:
1.0850" (27.5600MM)

Caution: Application Approval Required for P.T.O. Output Shaft Speeds Above 2500 R.P.M.

BOTTOM Side P.T.O. Model	Inter. Torq.	Dir. Rot.	Engine % Fwd.	Engine % Rev.	Filler Block	Adapter Assy.	Stud Kit	RIGHT Side P.T.O. Model	Inter. Torq.	Dir. Rot.	Engine % Fwd.	Engine % Rev.	Filler Block	Adapter Assy.	Stud Kit
ONE SPEED - TWO GEAR - MECHANICAL SHIFT															
282XDAJX-*3	293	Opp	79				Furnished	272XCAJX-*3	325	Opp	76				Furnished
282XGAJX-*3	246	Opp	112				Furnished	272XGAJX-*3	325	Opp	107				Furnished
282XKAJX-*3	220	Opp	125				Furnished	272XKAJX-*3	325	Opp	120				Furnished
282XMAJX-*3	197	Opp	140				Furnished	272XMAJX-*3	325	Opp	134				Furnished
282XPAJX-*3	176	Opp	156				Furnished	272XPAJX-*3	325	Opp	150				Furnished
282XSAJX-*3	158	Opp	174				Furnished	272XSAJX-*3	325	Opp	168				Furnished
282XTAJX-*3	141	Opp	195				Furnished	272XTAJX-*3	325	Opp	188				Furnished
ONE SPEED - TWO GEAR - POWERSHIFT (AIR)															
885XBAHX-*3 (3)	423	Opp	65				Furnished								
885XGAHX-*3 (8)	329	Opp	84				Furnished								
885XJAHX-*3 (5)	279	Opp	99				Furnished								
885XMAHX-*3 (6)	238	Opp	116				Furnished								
ONE SPEED - FORWARD & REVERSE															
348XFAHX-*5 (24)	200	Opp	84	88			Furnished	340XFAHX-*5 (24)	200	Opp	80	84	7-A-140(28)		Furnished
352ZSAHX-*3 (1)	140	Opp	187	241		328564X	Furnished	352XSAHX-*3 (1)	140	Opp	179	231			Furnished
863XBAHX-*5	423	Opp	65	81			Furnished								

❶ Transmission Models

- Models that apply to this application page.

❷ Transmission Gear Data

- Location of PTO opening on the transmission and opening size (SAE standard or non-standard).
- Gear position within the opening - either Gear to Rear of Centerline or Gear Forward of Centerline by 1/2 inch.

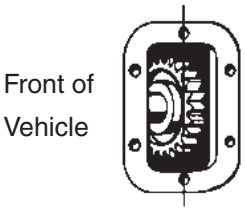

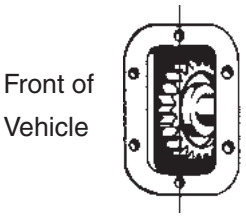

Parker Hannifin Corporation
Chelsea Products Division
Olive Branch, MS 38654 USA

- Description of the PTO driver gear - tooth count of the gear and description of the cut of the gear teeth (Spur, Left Hand Helix, or Right Hand Helix).


SPUR - teeth are cut straight across from its face from the side


L.H. HELIX - teeth slant upwards from left to right


R.H. HELIX - teeth slant upwards from right to left

③ Pitch Line to Aperture Face

- The distance between the pitch line of the transmission PTO driver gear and the mounting face (aperture).

Pitch Line (P. L.) to Aperture Face (A.F.) Dimension

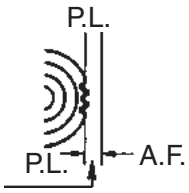

④ PTO Model

- The PTOs listed are normally mounted to the transmission with the output shaft toward the rear of the vehicle, with the shaft below the center of the opening.
- To complete the model number refer to the Assembly Options charts in section 3.

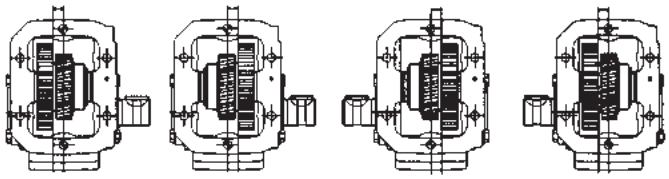

⑤ Intermittent Torque Rating (shown in lbs-ft)

- An intermittent torque rating is when the PTO operates only 5 minutes out of every 15. A PTO being used more than 5 minutes at a time is considered continuous duty and should have its torque rating reduced by 30%. To do this, multiply the given torque rating by .7. (i.e. 140 lbs-ft x .7 = 98 lbs-ft).

NOTE: 272, 280, 282, 287, 870, 877, 890, 892, 897, and 899 Series stated torque is for continuous and intermittent duty cycles. There is no need to reduce the torque rating for continuous applications.

6 PTO Direction of Rotation

- Viewed by standing at the rear of the vehicle, looking forward at the PTO shaft, with the PTO shaft pointing toward the rear of the vehicle.

PTO	Driven Equipment
OPP (looks “clockwise”)	Driven equipment must rotate counterclockwise (also called left-hand rotation, “A” for anti-clockwise or CCW for counterclockwise).
ENG (looks “counterclockwise”)	Driven equipment must rotate clockwise (also called right-hand rotation or “C” for clockwise).

- Remember that the PTO is specified looking from the rear of the truck to the front of the truck, and the driven equipment is specified looking from the front of the truck to the rear of the truck.

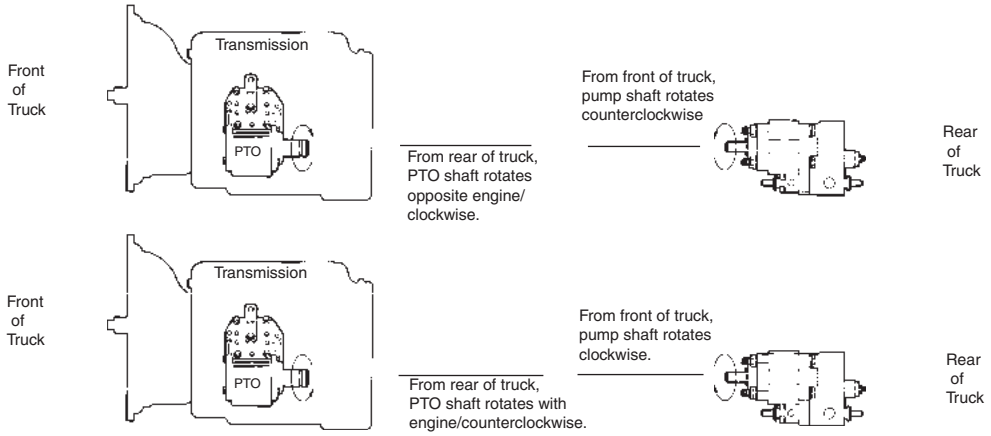

7 Shaft Speed Percentage

- The output shaft speed percentage is based upon engine RPM.
  Ex: If the engine speed is 1000 RPM and the PTO rating is 90% of engine speed, the PTO output shaft will turn 900 RPM (1000 x .90). If the engine speed is 1000 RPM and the PTO rating is 127% of engine speed, the PTO output shaft will turn 1270 RPM (1000 x 1.27).

NOTE: Output shaft speeds should not exceed 2500 RPM without application approval from Chelsea.

8 Filler Block

- If a filler block is required to properly mount the PTO or an adapter, the correct part number will be shown here. It must be ordered separately from the PTO.
- If a (T) is shown next to the part number, the filler block should be positioned next to the transmission.
- If a (P) is shown next to the part number, the filler block should be positioned next to the Power Take-Off.

9 Adapter Assembly

- An adapter or adapter plate listed in this column is required to mount the PTO to the transmission and must be ordered separately.
- Geared Adapters - used to change the rotation of the output shaft, clear an interference problem, or reach a drive gear that may be deep within the transmission.
- Adapter Plates - used to mount a six-bolt PTO to an eight-bolt opening.
- A geared adapter should not be mounted to an adapter plate.
- Do not mount two or more geared adapters together.
- A geared adapter should not be used on automatic transmissions.

10 Stud Kit

- When the word *Furnished* appears in this column, the stud kit is included with the PTO.
- A stud kit number listed in this column (i.e. 7170-1X) means that the stud kit must be ordered separately from the PTO.

11 PTO Header

- New PTO headers with type of shift mechanism.
- Mechanical, PowerShift (Air), PowerShift (Hydraulic).

Safety

Information from the Customer:

1. Make and model of transmission.

   _____

2. Type of driven equipment.

   _____

3. Input horsepower required of driven equipment.

   _____

4. Desired operating speed of driven equipment.

   _____

5. Approximate engine speed desired during operation.

   Figure the equipment speed expressed as a percentage of the desired engine speed during the duty cycle.

   Driven equipment ÷ Engine speed = App. PTO%

   _____

6. Direction of driven equipment shaft rotation in relation to direction of engine rotation (check one).

   _____ Opp.
   _____ Eng.

7. Type of connection between PTO and driven equipment (check one).

   _____ Driveshaft
   _____ Direct mount pump flange
   _____ Pulleys and belts (requires eng. approval)

8. Mounting location (check all suitable locations).

   _____ Left
   _____ Right
   _____ Bottom
   _____ Top
   _____ Countershaft

9. Duty cycle (check one).

   _____ Intermittent
   _____ Continuous

10. Other PTO speeds or reverse gear requirements.

    _____

    _____

Using the HY25-3000/US, Find:

11. Application page number for make and model of transmission.

    _____

12. From items 3 and 4 determine the intermittent torque requirements of the driven equipment using this formula:

    (HP x 5252) ÷ RPM = lbs-ft

    T=_____ lbs-ft (intermittent)

13. If torque requirements are continuous (more than 5 minutes operation every 15 minutes) divide the torque figure by .7. The result will be the torque required for continuous operation.

    _____

14. Find the PTO in the HY25-3000/US catalog that meets the torque, rotation, and speed percentage requirements of the application. Note the PTO model number and all numbers for mounting parts on the lines below.

    _____

    _____

15. Determine what options are needed and change model number prefix and suffix to obtain correct options. (See Model Number Construction in section 3).

    _____

    _____

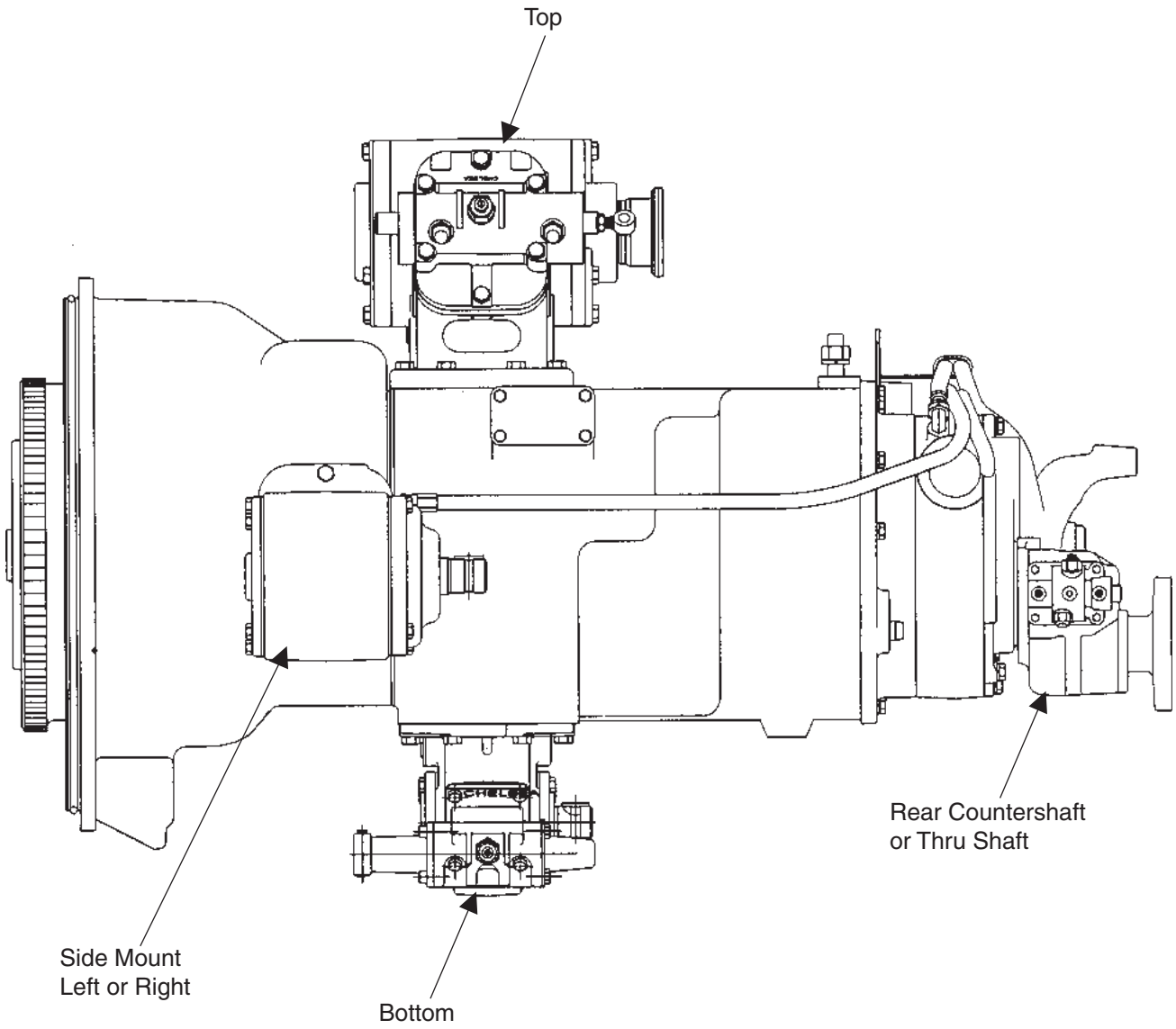

Parker Hannifin Corporation
Chelsea Products Division
Olive Branch, MS 38654 USA

AB	Universal
AC	Fiat
AD	Spicer
AG	Spicer
AH	Universal
AJ	Allison
AK	Universal
AL	Eaton Fuller
AP	Spicer
AQ	Spicer
AR	Spicer
AU	Chelsea
AW	New Process
AX	Eaton Fuller
BA	Navistar
BC	Eaton Fuller
BE	Chevy
BF	Warner
BG	Spicer
BH	Spicer
BJ	Chevy
BK	New Process
BL	New Process
BM	Eaton Fuller
BN	New Process
BP	Chevy/Spicer
BQ	Chevy/Spicer
BR	Hino
BS	New Process
BU	Eaton Fuller
BY	Warner
BZ	Warner
CB	New Process
CC	New Process
CD	Warner
CJ	Saab/Scania
CM	New Process
CR	Spicer
DA	Mack
DB	Eaton Fuller
DC	Hino/Nissan
DD	Spicer
DH	Renault
DJ	Renault
DK	Renault
DM	Eaton Fuller
DN	Eaton Fuller
DQ	Saab/Scania
DS	Warner
DU	Eaton Fuller
DX	Chevrolet
DY	Clark
EC	ZF
ED	ZF
EF	New Process
EL	Isuzu
EP	Warner
ER	Isuzu
ES	Eaton Fuller
ET	Eaton Fuller
EV	Eaton Fuller
EW	Eaton Fuller
FA	Jatco/Isuzu
FB	GM/Chevy
FC	Dodge
FE	Getrag
FJ	Allison
FL	ZF
FM	Nissan
FN	Spicer
FP	Mack/Renault
FQ	Mack/Renault
FR	Eaton Fuller
FS	Hino
FT	Mitsubishi
FV	Isuzu
FW	Eaton Fuller
FZ	Hino
GE	Eaton Fuller
GF	Eaton Fuller
GP	Eaton Fuller
GQ	Tremec
GR	ZF
GS	ZF
GW	Nissan
GX	Mitsubishi
GX	Adapter Gear
GY	Adapter Gear
GZ	Adapter Gear
GZ	Eaton Fuller
HA	Adapter Gear
HA	Mitsubishi
HB	Adapter Gear
HB	Mitsubishi
HC	Mitsubishi
HD	Adapter Gear
HD	Mitsubishi
HD	Ford
HE	Adapter Gear
HF	Adapter Gear
HG	Adapter Gear
HH	Adapter Gear
HJ	Adapter Gear
HK	Adapter Gear
HL	Adapter Gear
HM	Adapter Gear
HP	Adapter Gear
HQ	Adapter Gear
HR	Adapter Gear
HU	Mack
HV	Allison
HY	ZF
HZ	Eaton Fuller
JB	Adapter Gear
JD	Tremec
JE	Adapter Gear
JG	Mercedes
JH	Mercedes
JK	Eaton Fuller
JL	Adapter Gear
JM	Eaton Fuller
JN	Adapter Gear
JP	NVG
JQ	Adapter Gear
JR	Eaton Fuller
JS	Spicer
JT	Spicer
JU	Spicer
JV	Eaton Fuller
JW	Eaton Fuller
JX	Adapter Gear
JY	Adapter Gear
JZ	Adapter Gear
KA	Adapter Gear
KB	Adapter Gear
KH	Mercedes
KJ	ZF
KK	Adapter Gear
KL	ZF
KM	Adapter Gear
KN	TTC
KP	TTC
KR	Adapter Gear
KS	Ford
KT	Universal
KU	Aisin
KV	Caterpillar
KX	ZF
KY	ZF
KZ	Isuzu
LA	CAT
LB	ZF
LC	Eaton
LD	Eaton
LE	Eaton
LG	Eaton
LH	Eaton
LK	Eaton
LL	Ford
LM	Eaton
LP	Eaton
LQ	Eaton
LR	Eaton
LS	Mitsubishi
LT	Eaton
LU	Eaton

Parker Hannifin Corporation
Chelsea Products Division
Olive Branch, MS 38654 USA

Notes

Parker Hannifin Corporation
Chelsea Products Division
Olive Branch, MS 38654 USA

Notes

Parker Hannifin Corporation
Chelsea Products Division
Olive Branch, MS 38654 USA

PTO Options & Kits



Parker Chelsea

ENGINEERING YOUR SUCCESS.

Parker Hannifin Corporation
Chelsea Products Division
Olive Branch, MS 38654 USA

Mechanical Shift 6-Bolt PTOs
- PTO Options Chart ..... 2.1 thru 2.2
- Flange Conversion Kits ..... 2.3 thru 2.4
- Shifter & Cover Kits 2.5
- Installation Kits & Filler Blocks 2.6

Mechanical Shift 8-Bolt PTOs
- PTO Options Chart ..... 2.7 thru 2.8
- Flange Conversion Kits ..... 2.9 thru 2.11
- Shifter & Cover Kits 2.12
- Filler Blocks & Adapter Plates 2.13

Mechanical Shift Rear Mount PTOs
- PTO Options Chart 2.14
- Installation Kits 2.14

PowerShift Hydraulic 6-Bolt PTOs
- PTO Options Chart 2.15
- Installation Kits 2.16

PowerShift Pneumatic or Hydraulic 6/8-Bolt PTOs
- PTO Options Chart 2.17
- Installation Kits ..... 2.18 thru 2.19

PowerShift Hydraulic 8-Bolt PTOs
- PTO Options Chart 2.20

PowerShift Hydraulic 10-Bolt PTOs
- PTO Options Chart 2.21
- Installation & Conversion Kits 2.22

Constant Mesh 10-Bolt PTOs
- PTO Options Chart 2.23
- Flange Conversion Kits 2.24

PowerShift Rear Mount PTOs
- PTO Options Chart 2.25
- Vane Pump Options 2.25

Split Shaft Gear Boxes
- PTO Options Chart 2.26
- Specification Charts 2.26

Crankshaft Driven
- PTO Options Chart 2.27
- Flange Conversion Kits 2.28

Continued on next page

Options

Parker Hannifin Corporation
Chelsea Products Division
Olive Branch, MS 38654 USA

Options

Geared Adapters
- Guide to Specifying Geared Adapters 2.29
  - Standard Geared Adapters 2.30
  - Specifying Standard Geared Adapters ..... 2.31 thru 2.32
  - Kit-Style Dimensional Data ..... 2.33 thru 2.34
  - Gear Charts ..... 2.35 thru 2.36
  - Geared Adapters & Plates for Import Transmissions 2.37

Kits
- Gasket Kits 2.38
- Gasket & Seal Kits 2.39
- PTO Options & Kits 2.40
- Bracket Kits 2.41

PTO Shift Options
- Shift Options Overview 2.42

Pumps
- Dump Pump 2.43

Parker Hannifin Corporation
Chelsea Products Division
Olive Branch, MS 38654 USA

PTO Options Chart – Mechanical PTOs		221	290	340	352
Lubrication					
P	Pressure Lube	x			
X	No Pressure Lube	x	x	x	x
Shifting					
G	Air Shift (Opposite Output)			x	x
H	No Shift Kit	x			
P	12V Elec/Air Shift	x	x		
C	Special Shift Control & Bracket Kit	x			x
M	Constant Mesh	x			
A	Air Shift (Same Side as Output)			x	x
A	Air Shift	x	x		
S	Air Shift with PTO/Dump Pump Combo Valve w/ Kick Out w/ Neutral Spring Return	x	x		
T	Air Shift with PTO/Dump Pump Combo Valve w/o Kick Out w/ Neutral Spring Return	x	x		
U	Air Shift with PTO/Dump Pump Combo Valve w/ Kick Out w/o Neutral Spring Return	x	x		
V	Air Shift w/o Installation Kit	x	x	x	
W	Wire Shift	x			x
X	Wire Shift w/o Cable & Knob	x			x
Y	Lever Shift			x	x
Output					
AF	SAE “B” 2 or 4-Bolt Flange, SAE “BB” Shaft (1" - 15T)	x	x		
AK	SAE “B” 2-Bolt Flange, SAE “B” Shaft (7/8" - 13T)	x	x		
AZ	Non Standard Flange, SAE “C” Shaft (1-1/4" - 14T)	x			
XD	Rd Standard Shaft (1-1/4" - 5/16" Key)	x	x	x	x
XE	SAE “A” 2 or 4-Bolt Flange, SAE “A” Shaft (5/8" - 9T)	x	x		
XK	SAE “B” 2 or 4-Bolt Flange, SAE “B” Shaft (7/8" - 13T)	x	x		
XQ**	SAE “B” 2 or 4-Bolt Flange, SAE “B” Shaft (7/8" - 13T)	x			
XR	Chelsea Special (Cloverleaf), SAE “B” Shaft (7/8" - 13T)	x	x		
XX***	1-1/4" SAE Tapered Output Shaft w/Keyway	x	x		
XY	ISO 7653 Pump Mount DIN 5462 Shaft	x	x		
RC	Rotatable SAE “A” 2-Bolt Flange, SAE “A” Shaft (5/8" - 9T)	x	x		
RA	Rotatable SAE “B” 2-Bolt Flange, SAE “B” Shaft (7/8" - 13T)	x	x		
RF	Rotatable SAE “B” 2-Bolt Flange, SAE “BB” Shaft (1" - 15T)	x	x		
RB	Rotatable SAE “B” 4-Bolt Flange, SAE “B” Shaft (7/8" - 13T)	x	x		
RE	Rotatable SAE “B” 4-Bolt Flange, SAE “BB” Shaft (1" - 15T)		x		
RY	Rotatable ISO 7653 Pump Mount DIN 5462 Shaft	x	x		
GA	Greaseable SAE “B” 2-Bolt Rotatable Flange, SAE “B” Shaft (7/8" - 13T)	x			
GH	Greaseable SAE “B” 2-Bolt Rotatable Flange, SAE “BB” Shaft (1" - 15T)	x			
GB	Greaseable SAE “B” 4-Bolt Rotatable Flange, SAE “B” Shaft (7/8" - 13T)	x			
GK	Greaseable SAE “B” 2 or 4-Bolt Flange, SAE “B” Shaft (7/8" - 13T)	x			
GQ**	Greaseable SAE “B” 2 or 4-Bolt Flange, SAE “B” Shaft (7/8" - 13T)	x			
GF	Greaseable SAE “B” 2 or 4-Bolt Flange, SAE “BB” Shaft (1" - 15T)	x			
GZ	Greaseable Non Standard Flange, SAE “C” Shaft (1-1/4" - 14T)	x			
GR	Greaseable Chelsea Special (Cloverleaf), SAE “B” Shaft (7/8" - 13T)	x			
GY	Greaseable ISO 7653 Pump Mount DIN 5462 Shaft	x			

** XQ/GQ same as XK/GK except flange rotated 90°
*** Order companion (379824) separately
NOTE: Always check current price book for available options

Parker Hannifin Corporation
Chelsea Products Division
Olive Branch, MS 38654 USA

Options

PTO Options Chart – Mechanical PTOs		442	447	660
Lubrication				
P	Pressure Lube	x	x	x
X	No Pressure Lube	x	x	x
Shifting				
H	No Shift Kit	x	x	x
P	12V Elec/Air Shift	x	x	x
C	Special Shift Control & Bracket Kit	x	x	x
M	Constant Mesh	x	x	x
A	Air Shift	x	x	x
S	Air Shift with PTO/Dump Pump Combo Valve w/ Kick Out w/ Neutral Spring Return	x	x	x
T	Air Shift with PTO/Dump Pump Combo Valve w/o Kick Out w/ Neutral Spring Return	x	x	x
U	Air Shift with PTO/Dump Pump Combo Valve w/ Kick Out w/o Neutral Spring Return	x	x	x
V	Air Shift w/o Installation Kit	x	x	x
W	Wire Shift	x	x	x
X	Wire Shift w/o Cable & Knob	x	x	x
Output				
AF	SAE “B” 2 or 4-Bolt Flange, SAE “BB” Shaft (1" - 15T)	x	x	x
AK	SAE “B” 2-Bolt Flange, SAE “B” Shaft (7/8" - 13T)	x	x	x
AZ	Non Standard Flange, SAE “C” Shaft (1-1/4" - 14T)	x	x	x
SQ	SAE “B” 4-Bolt Flange, SAE “B” Shaft (7/8" - 13T)	x		
XD	Rd Standard Shaft (1-1/4" - 5/16" Key)	x	x	x
XE	SAE “A” 2 or 4-Bolt Flange, SAE “A” Shaft (5/8" - 9T)	x	x	x
XK	SAE “B” 2 or 4-Bolt Flange, SAE “B” Shaft (7/8" - 13T)	x	x	x
XQ**	SAE “B” 2 or 4-Bolt Flange, SAE “B” Shaft (7/8" - 13T)	x	x	x
XR	Chelsea Special (Cloverleaf), SAE “B” Shaft (7/8" - 13T)	x	x	x
XV	1410 Series Companion Flange			x
XX***	1-1/4" Tapered Output Shaft w/ Keyway	x	x	x
XY	ISO 7653 Pump Mount DIN 5462 Shaft	x	x	x
RC	Rotatable SAE “A” 2-Bolt Flange, SAE “A” Shaft (5/8" - 9T)	x	x	x
RD	Rotatable SAE “A” 2-Bolt Flange, SAE “B” Shaft (7/8" - 13T)	x	x	x
RA	Rotatable SAE “B” 2-Bolt Flange, SAE “B” Shaft (7/8" - 13T)	x	x	x
RF	Rotatable SAE “B” 2-Bolt Flange, SAE “BB” Shaft (1" - 15T)	x	x	x
RB	Rotatable SAE “B” 4-Bolt Flange, SAE “B” Shaft (7/8" - 13T)	x	x	x
RE	Rotatable SAE “B” 4-Bolt Flange, SAE “BB” Shaft (1" - 15T)	x	x	x
RY	Rotatable ISO 7653 Pump Mount DIN 5462 Shaft	x	x	x
GA	Greaseable SAE “B” 2-Bolt Rotatable Flange, SAE “B” Shaft (7/8" - 13T)	x	x	x
GH	Greaseable SAE “B” 2-Bolt Rotatable Flange, SAE “BB” Shaft (1" - 15T)	x	x	x
GB	Greaseable SAE “B” 4-Bolt Rotatable Flange, SAE “B” Shaft (7/8" - 13T)	x	x	x
GK	Greaseable SAE “B” 2 or 4-Bolt Flange, SAE “B” Shaft (7/8" - 13T)	x	x	x
GQ**	Greaseable SAE “B” 2 or 4-Bolt Flange, SAE “B” Shaft (7/8" - 13T)	x	x	x
GF	Greaseable SAE “B” 2 or 4-Bolt Flange, SAE “BB” Shaft (1" - 15T)	x	x	x
GZ	Greaseable Non Standard Flange, SAE “C” Shaft (1-1/4" - 14T)	x	x	x
GR	Greaseable Chelsea Special (Cloverleaf), SAE “B” Shaft (7/8" - 13T)	x	x	x
GY	Greaseable ISO 7653 Pump Mount DIN 5462 Shaft	x	x	x

** XQ/GQ same as XK/GK except flange rotated 90°
*** Order companion (379824) separately
NOTE: Always check current price book for available options

Parker Hannifin Corporation
Chelsea Products Division
Olive Branch, MS 38654 USA

For converting the 221, 290, 442, 447, 660 Series Chelsea PTOs from a driveshaft output, or as listed, to a new pump flange output, use the following kits. Consult the Chelsea price book for availability by series.

Pump Suffix	Kit Number Suffix	Kit Number	Flange Type	Shaft Type
AF	XD to AF	328591-30X	SAE “B” 2 or 4-Bolt	1" - 15 Tooth Splined (BB)
AF (Wet Spline 221)	XD to AF	328591-140X	SAE “B” 2 or 4-Bolt	1" - 15 Tooth Splined (BB)
AK	XD to AK	328591-28X	SAE “B” 2-Bolt	7/8" - 13 Tooth Splined (B)
AK (“B” Ratio)	XD to AK	329436-7X	SAE “B” 2-Bolt	7/8" - 13 Tooth Splined (B)
AZ	XD to AZ	328591-70X	SAE “B” 4-Bolt	1-1/4" - 14 Tooth Splined (C)
SQ	XD to SQ	328591-149X	SAE “B” 2-Bolt	7/8" - 13 Tooth Splined (B)
SQ (“B” Ratio)	XD to SQ	329436-9X	SAE “B” 2-Bolt	7/8" - 13 Tooth Splined (B)
XE	XD to XE	328591-27X	SAE “A” 2 or 4-Bolt	5/8" - 9 Tooth Splined (A)
XK	XD to XK	328591-16X	SAE “B” 2 or 4-Bolt	7/8" - 13 Tooth Splined (B)
XK (“B” Ratio)	XD to XK	329436-3X	SAE “B” 2 or 4-Bolt	7/8" - 13 Tooth Splined (B)
XP	XD to XP	328591-23X	SAE “A” 2-Bolt	7/8" - 13 Tooth Splined (B)
XP (“B” Ratio)	XD to XP	329436-5X	SAE “A” 2-Bolt	7/8" - 13 Tooth Splined (B)
XQ	XD to XQ	328591-17X	SAE “B” 2 or 4-Bolt	7/8" - 13 Tooth Splined (B)
XQ (“B” Ratio)	XD ro XQ	329436-6X	SAE “B” 2 or 4-Bolt	7/8" - 13 Tooth Splined (B)
XR	XD to XR	328591-52X	Chelsea Special	7/8" - 13 Tooth Splined (B)
XV	XD to XV	328591-130X	1410 Companion Flange	1-1/4" Round
XX	XD to XX	328591-122X	1410 Companion Flange	1-1/4" Tapered
XY	XD to XY	328591-121X	ISO 7653 Pump Mount	DIN 5462 Splined
RC (Rotatable)	XD to RC	328591-112X	SAE “A” 2-Bolt	5/8" - 9 Tooth Splined (A)
RD (Rotatable)	XD to RD	328591-113X	SAE “A” 2-Bolt	7/8" - 13 Tooth Splined (B)
RD (“B” Ratio) (Rotatable)	XD to RD	329436-8X	SAE “A” 2-Bolt	7/8" - 13 Tooth Splined (B)
RA (Rotatable)	XD to RA XR to RA	328591-55X 328591-53X	SAE “B” 2-Bolt SAE “B” 2-Bolt	7/8" - 13 Tooth Splined (B) 7/8" - 13 Tooth Splined (B)
RA (“B” Ratio) (Rotatable)	XD to RA	329436-1X	SAE “B” 2-Bolt	7/8" - 13 Tooth Splined (B)
RF (Rotatable)	XD to RF	328591-78X	SAE “B” 2-Bolt	1" - 15 Tooth Splined (BB)
RB (Rotatable)	XD to RB XR to RB	328591-56X 328591-54X	SAE “B” 4-Bolt SAE “B” 4-Bolt	7/8" - 13 Tooth Splined (B) 7/8" - 13 Tooth Splined (B)
RB (“B” Ratio) (Rotatable)	XD to RB	329436-2X	SAE “B” 4-Bolt	7/8" - 13 Tooth Splined (B)
RE (Rotatable)	XD to RE	328591-134X	SAE “B” 4-Bolt	1" - 15 Tooth Splined (BB)
RY (Rotatable)	XD to RY	328591-131X	ISO 7653 Pump Mount	DIN 5462 Splined
GA (Greaseable)	XD to GA XR to GA RA to GA	328591-72X 328591-73X 328591-106X	SAE “B” 2-Bolt Rotatable	*7/8" - 13 Tooth Splined (B)
GH (Greaseable)	XD to GH RF to GH	328591-116X 328591-114X	SAE “B” 2-Bolt Rotatable	*1" - 15 Tooth Splined (BB)
GB (Greaseable)	XD to GB XR to GB RB to GB	328591-74X 328591-75X 328591-107X	SAE “B” 4-Bolt Rotatable	*7/8" - 13 Tooth Splined (B)
GK (Greaseable)	XD to GK XK to GK	328591-89X 328591-86X	SAE “B” 2 or 4-Bolt	*7/8" - 13 Tooth Splined (B)
GQ (Greaseable)	XD to GQ XQ to GQ	328591-91X 328591-86X	SAE “B” 2 or 4-Bolt	*7/8" - 13 Tooth Splined (B)
GF (Greaseable)	XD to GF AF to GF	328591-71X 328591-108X	SAE “B” 2 or 4-Bolt	*1" - 15 Tooth Splined (BB)
GZ (Greaseable)	XD to GZ AZ to GZ	328591-93X 328591-88X	Non Standard	*1-1/4" - 14 Tooth Splined (C)
GR (Greaseable)	XD to GR	328591-76X	Chelsea Special 4-Bolt	*7/8" - 13 Tooth Splined (B)
GY (Greaseable)	XD to GY XY to GY	328591-92X 328591-87X	ISO 7653 Pump Mount	*DIN 5462 Splined

*Grease fitting on end of shaft

Continued on Next Page

For converting the 660 Series Chelsea PTOs from a driveshaft output, or as listed, to a new pump flange output, use the following kits. Consult the Chelsea price book for availability by series.

Pump Suffix	Kit Number Suffix	Kit Number	Flange Type	Shaft Type
GA (660 Series) (Greaseable)	XD to GA RA to GA	328591-124X 328591-109X	SAE “B” 2-Bolt	*7/8" - 13 Tooth Splined (B)
GH (660 Series) (Greaseable)	XD to GH RF to GH	328591-117X 328591-115X	SAE “B” 2-Bolt Rotatable	*1" - 15 Tooth Splined (BB)
GB (660 Series) (Greaseable)	XD to GB RG to GB	328591-125X 328591-110X	SAE “B” 4-Bolt	*7/8" - 13 Tooth Splined (B)
GK (660 Series) (Greaseable)	XD to GK XK to GK	328591-99X 328591-96X	SAE “B” 2 or 4-Bolt	*7/8" - 13 Tooth Splined (B)
GQ (660 Series) (Greaseable)	XD to GQ XQ to GQ	328591-101X 328591-96X	SAE “B” 2 or 4-Bolt	*7/8" - 13 Tooth Splined (B)
GF (660 Series) (Greaseable)	XD to GF AF to GF	328591-123X 329591-111X	SAE “B” 2 or 4-Bolt	*1" - 15 Tooth Splined (BB)
GZ (660 Series) (Greaseable)	XD to GZ AZ to GZ	328591-103X 328591-98X	SAE “B” 4-Bolt	*1-1/4" - 14 Tooth Splined (C)
GR (660 Series) (Greaseable)	XD to GR	328591-126X	Chelsea Special 4-Bolt	*7/8" - 13 Tooth Splined (B)
GY (660 Series) (Greaseable)	XD to GY XY to GY	328591-102X 329591-97X	ISO 7653 Pump Mount	*DIN 5462 Splined

*Grease fitting on end of shaft

Parker Hannifin Corporation
Chelsea Products Division
Olive Branch, MS 38654 USA

PTO Shift Mechanisms Field Conversion Kits

Series/ Application	Assembly Arrangement	Wire to Air	Lever to Air	Wire to Elec. Over Air	Lever to Elec. Over Air
221	3, 4, 5 & 6	328390-88X	328390-89X	328390-109X (12V)	N/A
290	3, 4, 5 & 6	328390-123X	N/A	N/A	N/A
340	3 & 5	N/A	328390-92X	N/A	N/A
352	N/A	N/A	N/A	N/A	N/A
442	3, 4, 5 & 6	328390-117X	328390-117X	328390-119X (12V) 328390-120X (24V)	328390-119X (12V) 328390-120X (24V)
447	3, 4, 5 & 6	N/A	328390-117X	328390-127X (12V)	N/A
660	3, 4, 5 & 6	328390-117X	328390-117X	328390-119X (12V) 328390-120X (24V)	N/A

N/A – Non Applicable

6-Bolt Cover Assemblies

Series/ Application	Assembly Arrangement	Wire Control	Air Control
221	3 & 6	328805-1X	328723X
221	4 & 5	328805-2X	328723X
290	3, 4, 5 & 6		329363X
340	G4 & A5 A4 & G5	N/A	328911X 328912X
352	3 & 6 4 & 5	328830-1X 328830-2X	328826-1 & 3X 328826-2 & 4X
442 Q, W & X	3 & 6	329119-1X	
442 Q, W & X	4 & 5	329119-2X	
442 F, L, R, S & U	3 & 6	329121-1X	
442 F, L, R, S & U	4 & 5	329121-2X	
442 A, B & C	3 & 6	329271-1X	
442 A, B & C	4 & 5	329271-2X	
442 (All Ratios)	All		329361X
447 Q & W	3 & 6	329151-1X	
447 Q & W	4 & 5	329151-2X	
447 S, U & R	3 & 6	329152-1X	
447 S, U & R	4 & 5	329152-2X	
447 (All Ratios)	All		329363X
660 Q & W	3 & 6	329119-1X	
660 Q & W	4 & 5	329119-2X	
660 F, S & U	3 & 6	329121-1X	
660 F, S & U	4 & 5	329121-2X	
660 (All Ratios)	All		329361X

Options

Installation Kits

Series/ Application	Assembly Arrangement	Wire Control	Air Control	Electric Over Air		Air Shift w/ Combo Valve Less Kick Out	Air Shift w/Combo Valve
				12 Volt	24 Volt		
221	3, 4, 5 & 6	328380X	328388-98X	328388-47X	328388-48X	N/A	328388-65X
290	3, 4, 5 & 6	N/A	328388-98X	328388-47X	328388-48X	N/A	328388-65X
340	N/A	N/A	N/A	N/A	N/A	N/A	N/A
352	3, 4, 5 & 6	N/A	328388-40X	N/A	N/A	N/A	N/A
442	3, 4, 5 & 6	328380X	328388-98X	328388-47X	328388-48X	328388-72X	328388-65X
447	3, 4, 5 & 6	328380X	328388-98X	328388-47X	328388-48X	N/A	328388-65X
660	3, 4, 5 & 6	328380X	328388-98X	328388-47X	328388-48X	328388-72X	328388-65X

N/A – Non Applicable

Filler Blocks

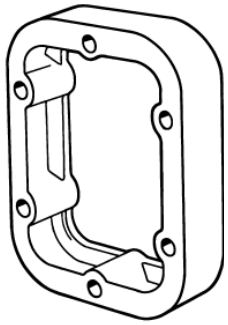

A filler block, or spacer, may be required on certain transmissions to properly space the PTO and get the correct backlash. The application page will call out the filler block as required.

Two filler blocks may be used in combination with one or more gaskets between the filler block surfaces to obtain the proper spacing.

In computing the total thickness of the filler block and gasket combination, use a factor of .012" (compressed thickness of a .020" gasket 35-P-9-2 or 35-P-15-2) for every .020" gasket required in the installation.

6-Bolt Filler Blocks

Part Number	"A" Thickness	Material	Part Number	"A" Thickness	Material
7-A-032	.032"	Fiber	7-A-500	.500"	Cast Iron
7-A-062	.062"	Fiber	7-A-500	.500"	Cast Iron
7-A-093	.093"	Steel	7-A-550	.550"	Cast Iron
7-A-125	.125"	Steel	7-A-562	.562"	Cast Iron
7-A-140	.140"	Steel	7-A-700	.700"	Cast Iron
7-A-165	.165"	Steel	7-A-800	.800"	Cast Iron
7-A-187	.187"	Steel	7-A-1000	1.000"	Cast Iron
7-A-200	.200"	Cast Iron	7-A-1180	1.180"	Cast Iron
7-A-240	.240"	Cast Iron	7-A-1250	1.250"	Cast Iron
7-A-270	.270"	Cast Iron	7-A-1468	1.468"	Cast Iron
7-A-300	.300"	Cast Iron	7-A-1520	1.520"	Cast Iron
7-A-350	.350"	Cast Iron	7-A-1640	1.640"	Cast Iron
7-A-400	.400"	Cast Iron	7-A-1875	1.875"	Cast Iron
7-A-450	.450"	Cast Iron	7-A-2000	2.000"	Cast Iron

PTO Options Chart – Mechanical PTOs		348	489	680	823	863	880
Lubrication							
P	Pressure Lube		x	x	x	x	x
X	No Pressure Lube	x	x	x	x	x	x
W	Wet Spline				x		
Shifting							
G	Air Shift (Opposite Output)	x					
P	12V Elec/Air Shift		x	x			x
Q	24V Elec/Air Shift			x			
C	Special Shift Control & Bracket Kit		x	x			
M	Constant Mesh		x	x	x		x
A	Air Shift		x	x	x		x
A	Air Shift (Same Side as Output)	x					
S	Air Shift with PTO/Dump Pump Combo Valve w/ Kick Out w/ Neutral Spring Return		x	x			
T	Air Shift with PTO/Dump Pump Combo Valve w/o Kick Out w/ Neutral Spring Return		x	x			
U	Air Shift with PTO/Dump Pump Combo Valve w/ Kick Out w/o Neutral Spring Return		x	x			
V	Air Shift w/o Installation Kit	x	x	x	x		x
W	Wire Shift		x	x			
X	Wire Shift w/o Cable & Knob		x	x			
Y	Lever Shift	x			x	x	x
Output							
AB	DIN 120 Flange				x		x
AC	DIN 100 Flange				x		x
AF	SAE “B” 2 or 4-Bolt Flange, SAE “BB” Shaft (1" - 15T)		x	x			x
AK	SAE “B” 2-Bolt Flange, SAE “B” Shaft (7/8" - 13T)		x	x			x
AZ	Non Standard Flange, SAE “C” Shaft (1-1/4" - 14T)		x	x			x
SQ	SAE “B” 4-Bolt Flange, SAE “B” Shaft (7/8" - 13T)		x	x			
SK	Double Pump Output - SAE “B” 2 or 4-Bolt Flange (7/8" - 13T), SAE “C” 2 or 4-Bolt Flange (1-1/4" - 14T)						x
SS	Double Pump Output - SAE “C” 2 or 4-Bolt Flanges (1-1/4" - 14T)						x
XD	Rd Standard Shaft (1-1/4" - 5/16" Key)	x	x	x			
XE	SAE “A” 2 or 4-Bolt Flange, SAE “A” Shaft (5/8" - 9T)		x	x			
XG	Non Standard SAE “A” 2-Bolt Flange, Non Standard Shaft (3/4" - 3/16" Key) Long		x	x			
XK	SAE “B” 2 or 4-Bolt Flange, SAE “B” Shaft (7/8" - 13T)						x
XQ**	SAE “B” 2 or 4-Bolt Flange, SAE “B” Shaft (7/8" - 13T)		x	x			
XR	Chelsea Special (Cloverleaf), SAE “B” Shaft (7/8" - 13T)		x	x			
XS	SAE “C” 4-Bolt Flange, SAE “C” Shaft (1-1/4" - 14T)				x, w		x, w
XU	SAE “C” 2-Bolt Flange, SAE “C” Shaft (1-1/4" - 14T)				x		
XV	1-1/4" Keyed w/ 1410 Series Companion Flange (379828)	x	x	x			
XV	1410 Series Companion Flange		x		x	x	x
XX***	1-1/4" Tapered Output Shaft w/ Keyway		x	x			
XY	ISO 7653 Pump Mount DIN 5462 Shaft		x	x			x
VV	Double 1410 Output						x
YY	Double Pump Mount DIN 80						x
RC	Rotatable SAE “A” 2-Bolt Flange, SAE “A” Shaft (5/8" - 9T)		x	x			
RD	Rotatable SAE “A” 2-Bolt Flange, SAE “B” Shaft (7/8" - 13T)		x	x			
RH	Rotatable SAE “A” 2-Bolt Flange, SAE “19-4” Shaft (3/4" - 11T)		x	x			
RA	Rotatable SAE “B” 2-Bolt Flange, SAE “B” Shaft (7/8" - 13T)		x	x			
RF	Rotatable SAE “B” 2-Bolt Flange, SAE “BB” Shaft (1" - 15T)		x	x			
RB	Rotatable SAE “B” 4-Bolt Flange, SAE “B” Shaft (7/8" - 13T)		x	x			
RE	Rotatable SAE “B” 4-Bolt Flange, SAE “BB” Shaft (1" - 15T)		x	x			
RY	Rotatable ISO 7653 Pump Mount DIN 5462 Shaft		x	x			

** XQ/GQ same as XK/GK except flange rotated 90°
*** Order companion (379824) separately
w = Wet Spline Option
NOTE: Always check current price book for available options

Continued on Next Page

Parker Hannifin Corporation
Chelsea Products Division
Olive Branch, MS 38654 USA

Options

PTO Options Chart – Mechanical PTOs		348	489	680	823	863	880
Output (Cont'd)							
GA	Greaseable SAE "B" 2-Bolt Rotatable Flange, SAE "B" Shaft (7/8" - 13T)		x	x			
GH	Greaseable SAE "B" 2-Bolt Rotatable Flange, SAE "BB" Shaft (1" - 15T)		x	x			
GB	Greaseable SAE "B" 4-Bolt Rotatable Flange, SAE "B" Shaft (7/8" - 13T)		x	x			
GK	Greaseable SAE "B" 2 or 4-Bolt Flange, SAE "B" Shaft (7/8" - 13T)		x	x			
GQ**	Greaseable SAE "B" 2 or 4-Bolt Flange, SAE "B" Shaft (7/8" - 13T)		x	x			
GF	Greaseable SAE "B" 2 or 4-Bolt Flange, SAE "BB" Shaft (1" - 15T)		x	x			
GS	Greaseable SAE "C" 2 or 4-Bolt, 1-1/4" - 14T Shaft				x		x
GZ	Greaseable Non Standard Flange, SAE "C" Shaft (1-1/4" - 14T)		x	x			
GR	Greaseable Chelsea Special (Cloverleaf), SAE "B" Shaft (7/8" - 13T)		x	x			
GY	Greaseable ISO 7653 DIN 5462 Pump Mount		x	x			
Self-Lube							
LG	1410 Series Companion Flange w/ Self Lube						x
LA	SAE "B" 2-Bolt w/Self Lube Pump, SAE "B" Shaft (7/8" - 13T)		x	x			
LB	SAE "A" 2-Bolt w/Self Lube Pump, SAE "B" Shaft (7/8" - 13T)		x	x			

** XQ/GQ same as XK/GK except flange rotated 90°
NOTE: Always check current price book for available options

Parker Hannifin Corporation
Chelsea Products Division
Olive Branch, MS 38654 USA

For converting 8-Bolt Chelsea PTOs from a driveshaft output to a pump flange output, use the following kits.

489 Series

Pump Suffix	Kit No. Suffix	Kit Number	Flange Type	Shaft Type
AF	XD to AF	328591-30X	SAE “B” 2 or 4-Bolt	1" - 15 Tooth Splined (BB)
AK	XD to AK	328591-28X	SAE “B” 2-Bolt	7/8" - 13 Tooth Splined (B)
AZ	XD to AZ	328591-70X	Non Standard 4-Bolt	1-1/4" - 14 Tooth Splined (C)
SQ	XD to SQ	328591-149X	SAE “B” 4-Bolt	7/8" - 13 Tooth Splined (B)
XE	XD to XE	328591-27X	SAE “A” 2 or 4-Bolt	5/8" - 9 Tooth Splined (A)
XK	XD to XK	328591-16X	SAE “B” 2 or 4-Bolt	7/8" - 13 Tooth Splined (B)
XQ	XD to XQ	328591-17X	SAE “B” 2 or 4-Bolt	7/8" - 13 Tooth Splined (B)
XR	XD to XR	328591-52X	Chelsea Special (Cloverleaf)	7/8" - 13 Tooth Splined (B)
XX	XD to XX	328591-122X	1410 Companion Flange	1-1/4" SAE Tapered
XY	XD to XY	328591-121X	ISO 7653 Pump Mount	DIN 5462 Splined
RC (Rotatable)	XD to RC	328591-112X	SAE “A” 2-Bolt	5/8" - 9 Tooth Splined (A)
RD (Rotatable)	XD to RD	328591-113X	SAE “A” 2-Bolt	7/8" - 13 Tooth Splined (B)
RA (Rotatable)	XD to RA XR to RA	328591-55X 328591-53X	SAE “B” 2-Bolt	7/8" - 13 Tooth Internal Spline (B)
RF (Rotatable)	XD to RF	328591-78X	SAE “B” 2-Bolt	1" - 15 Tooth Splined (BB)
RB (Rotatable)	XD to RB XR to RB	328591-56X 328591-54X	SAE “B” 4-Bolt	7/8" - 13 Tooth Internal Spline (B)
RE (Rotatable)	XD to RE	328591-134X	SAE “B” 4-Bolt	1" - 15 Tooth Splined (BB)
RY (Rotatable)	XD to RY	328591-131X	ISO 7653 Pump Mount	DIN 5462 Splined
GA (Greaseable)	XD to GA XR to GA RA to GA	328591-72X 328591-73X 328591-106X	SAE “B” 2-Bolt Rotatable	*7/8" - 13 Tooth Internal Spline (B)
GH (Greaseable)	XD to GH RF to GH	328591-116X 328591-114X	SAE “B” 2-Bolt Rotatable	*1" - 15 Tooth Internal Spline (BB)
GB (Greaseable)	XD to GB XR to GB RB to GB	328591-74X 328591-75X 328591-107X	SAE “B” 4-Bolt Rotatable	*7/8" - 13 Tooth Internal Spline (B)
GK (Greaseable)	XD to GK XK to GK	328591-89X 328591-86X	SAE “B” 2 or 4-Bolt	*7/8" - 13 Tooth Internal Spline (B)
GQ (Greaseable)	XD to GQ XQ to GQ	328591-91X 328591-86X	SAE “B” 2 or 4-Bolt	*7/8" - 13 Tooth Internal Spline (B)
GF (Greaseable)	XD to GF AF to GF	328591-71X 328591-108X	SAE “B” 2 or 4-Bolt	*1" - 15 Tooth Internal Spline (BB)
GZ (Greaseable)	XD to GZ AZ to GZ	328591-93X 328591-88X	Non Standard	*1-1/4" - 14 Tooth Splined (C)
GR (Greaseable)	XD to GR	328591-76X	Chelsea Special (Cloverleaf)	*7/8" - 13 Tooth Internal Spline (B)

*Grease fitting on end of shaft
NOTE: Use 329097-1X to convert PTOs with AK, XP, XQ, XN, or XK output to the self-lube pump option.
NOTE: Contact Chelsea Customer Service for kits not listed.

Options

680 Series				
Pump Suffix	**Kit No. Suffix**	**Kit Number**	**Flange Type**	**Shaft Type**
AF	XD to AF	328591-30X	SAE “B” 2 or 4-Bolt	1" - 15 Tooth Internal Spline (BB)
AK	XD to AK	328591-28X	SAE “B” 2-Bolt	7/8" - 13 Tooth Internal Spline (B)
AZ	XD to AZ	328591-70X	Non Standard	1-1/4" - 14 Tooth Internal Spline (C)
XE	XD to XE	328591-27X	SAE “A” 2 or 4-Bolt	5/8" - 9 Tooth Internal Spline (A)
XK	XD to XK	328591-16X	SAE “B” 2 or 4-Bolt	7/8" - 13 Tooth Internal Spline (B)
XQ	XD to XQ	328591-26X	SAE “B” 2 or 4-Bolt	7/8" - 13 Tooth Internal Spline (B)
XR	XD to XR	328591-23X	Chelsea Special (Cloverleaf)	7/8" - 13 Tooth Internal Spline (B)
XV	XD to XV	328591-17X	1410 Companion Flange	1-1/4" Round 5/16" Key Tapered
XX	XD to XX	328591-52X	1410 Companion Flange	1-1/4" Round 5/16" Key Tapered
XY	XD to XY	328591-121X	ISO 7653 Pump Mount	B8 x 32 x 36 DIN 5462 Splined
RC (Rotatable)	XD to RC	328591-112X	SAE “A” 2-Bolt	5/8" - 9 Tooth Internal Spline (A)
RA (Rotatable)	XD to RA XR to RA	328591-55X 328591-53X	SAE “B” 2-Bolt	7/8" - 13 Tooth Internal Spline (B)
RB (Rotatable)	XD to RB XR to RB	328591-56X 328591-54X	SAE “B” 4-Bolt	7/8" - 13 Tooth Internal Spline (B)
RE (Rotatable)	XD to RE	328591-134X	SAE “B” 4-Bolt	1" - 15 Tooth Splined (BB)
RY (Rotatable)	XD to RY	328591-131X	ISO 7653 Pump Mount	DIN 5462 Splined
GA (Greaseable)	XD to GA RA to GA	328591-124X 328591-109X	SAE “B” 2-Bolt Rotatable	*7/8" - 13 Tooth Internal Spline (B)
GH (Greaseable)	XD to GH RF to GH	328591-117X 328591-115X	SAE “B” 2-Bolt Rotatable	*1" - 15 Tooth Internal Spline (BB)
GB (Greaseable)	XD to GB RB to GB	328591-125X 328591-110X	SAE “B” 4-Bolt Rotatable	*7/8" - 13 Tooth Internal Spline (B)
GK (Greaseable)	XD to GK XK to GK	328591-99X 328591-96X	SAE “B” 2 or 4-Bolt	*7/8" - 13 Tooth Internal Spline (B)
GQ (Greaseable)	XD to GQ XQ to GQ	328591-101X 328591-96X	SAE “B” 2 or 4-Bolt	*7/8" - 13 Tooth Internal Spline (B)
GF (Greaseable)	XD to GF AF to GF	328591-123X 328591-111X	SAE “B” 2 or 4-Bolt	*1" - 15 Tooth Internal Spline (BB)
GZ (Greaseable)	XD to GZ AZ to GZ	328591-103X 328591-98X	Non Standard	*1-1/4" - 14 Tooth Internal Spline (C)
GR (Greaseable)	XD to GR	328591-126X	Chelsea Special (Cloverleaf)	*7/8" - 13 Tooth Internal Spline

*Grease fitting on end of shaft
NOTE: Contact Chelsea Customer Service for kits not listed.

823 Series				
Pump Suffix	**Kit No. Suffix**	**Kit Number**	**Flange Type**	**Shaft Type**
GS (Greaseable)	XS to GS XV to GS	328591-136X 328591-137X	SAE “C” 2 or 4-Bolt Flange	1-1/4" - 14 Tooth Spline

880 Series				
Pump Suffix	**Kit No. Suffix**	**Kit Number**	**Flange Type**	**Shaft Type**
AZ (Splash Lube) AZ (Pressure Lube)	XV to AZ AV to AZ	328591-127X 328591-128X	SAE “B” 2 & 4-Bolt	1-1/4" - 14 Tooth Internal Spline
XK (Splash Lube) XK (Pressure Lube)	XV to XK XV to XK	328591-32X 328591-58X	SAE “B” 2 & 4-Bolt	7/8" - 13 Tooth Internal Spline
XS (Splash Lube) XS (Pressure Lube)	XV to XS XV to XS	328591-31X 328591-49X	SAE “C” 2 & 4-Bolt	1-1/4" - 14 Tooth Internal Spline
XY	XV to XY	328591-34X	ISO 7653 Pump Mount	B8 x 32 x 36 DIN 5462 Splined
GS (Greaseable)	XS to GS XV to GS	328591-133X 328591-135X	SAE “C” 2 & 4-Bolt	1-1/4" - 14 Tooth Internal Spline

Options

PTO Shift Mechanisms Field Conversion Kits

Series	Assembly Arrangement	Wire to Air	Lever to Air	Wire to Elec. Over Air		Lever to Elec. Over Air	
				12 Volt	24 Volt	12 Volt	24 Volt
489	3, 4, 5 & 6	328390-117X	328390-117X	328390-119X	328390-120X	No Longer Available	No Longer Available
680	3, 4, 5 & 6	328390-117X	328390-117X	328390-119X	328390-120X		
823	3, 4, 5 & 6		328390-154X				

Cover Assemblies

Series/ Application	Assembly Arrangement	Wire Control	Lever Control	Air Control
489 Q, W & X 3 & 6	329119-1X		No Longer Available	329361X
489 Q, W, & X 4 & 5	329119-2X			
489 F,L,R,S & U	3 & 6	329121-1X		
489 F,L,R,S & U	4 & 5	329121-2X		
489 A & C	3 & 6	329271-1X		
489 A & C	4 & 5	329271-2X		
489 (All Ratios)	All			
680 Q	3 & 6	329119-1X		329361X
680 Q	4 & 5	329119-2X		
680 F & S	3 & 6	329121-1X		
680 F & S	4 & 5	329121-2X		
680 (All Ratios)	All			
880	3, 4, 5 & 6		329125X	329126X

Installation Kits

Series/ Application	Assembly Arrangement	Wire Control	Air Control	Electric Over Air		Air Shift w/ Combo Valve PTO Kick Out	Air Shift w/ Valve Combo
				12 Volt	24 Volt		
489	3, 4, 5 & 6	*328380X	328388-98X	328388-47X	328388-48X	328388-72X	328388-65X
680	3, 4, 5 & 6	*328380X	328388-98X	328388-47X	328388-48X	328388-72X	328388-65X
823			328388-61X				
880			329216-3X				

* Control Cable & Knob not Included

Parker Hannifin Corporation
Chelsea Products Division
Olive Branch, MS 38654 USA

Filler Blocks

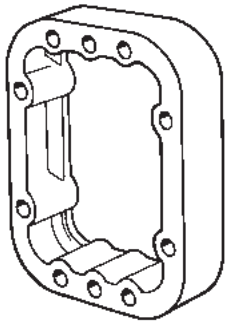

A filler block, or spacer, may be required on certain transmissions to properly space the PTO and get the correct backlash. The application page will call out the filler block as required.

Two filler blocks may be used in combination with one or more gaskets between the filler block surfaces to obtain the proper spacing.

In computing the total thickness of the filler block and gasket combination, use a factor of .012" (compressed thickness of a .020" gasket 35-P-9-2 or 35-P-15-2) for every .020" gasket required in the installation.

8-Bolt Filler Blocks

Part Number	"A" Thickness	Material	Part Number	"A" Thickness	Material
8-A-032	.032"	Fiber	8-A-295	.295"	Cast Iron
8-A-093	.093"	Steel	8-A-375	.375"	Cast Iron
8-A-062	.062"	Fiber or Steel	8-A-500	.500"	Cast Iron
8-A-165	.165"	Steel	8-A-600	.600"	Cast Iron
8-A-190	.190"	Steel	8-A-700	.700"	Cast Iron
8-A-248	.248"	Steel or Cast Iron			

8-Bolt Adapter Plates

8-Bolt adapter plates are used to convert an SAE 8-Bolt aperture or a non Standard opening to an SAE 6-Bolt aperture.

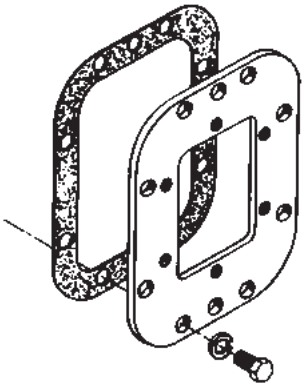

Adapter Plates

Adapter Kit Number	"A" Thickness or Angularity	Adapter Plate Part Number	Stud Kit Number
310778X	.375"	26-P-22	328170-127X
328787X	.460"	26-P-27	328170-129X
328564X	.460"	26-P-27	328170-127X
328481X	.248"	328453X	328170-128X

Parker Chelsea

Parker Hannifin Corporation
Chelsea Products Division
Olive Branch, MS 38654 USA

Options

PTO Options Chart – Rear Mount PTOs		511	523	541
Mounting Designator				
AA	ZF	x	x	
AA	Fuller			
AB	Iveco 2845.6	x	x	
AC	ZF-AS Tronic Meritor Freedomline™	x	x	
AD	ZF 16S151/181/221	x	x	
AE	Mercedes	x	x	
AG	Volvo	x	x	
AH	ZF	x	x	
AM	Fuller	x	x	
AQ	ZF	x	x	
AR	Fuller	x	x	
AS	Volvo I-Shift/Mack mDrive		x	
AT	Fuller			x
AU	Fuller			x
BD	Fuller			x
BJ	Fuller	x	x	x
LG	Fuller	x	x	x
Lubrication				
X	Standard Lubrication		x	
W	Wet Spline	x	x	
Shifting				
H	No Shift Kit	x	x	
P	12V Elec/Air Shift	x	x	
Q	24V Elec/Air Shift	x	x	
F	ZF-AS Tronic Meritor Freedomline™	x	x	
A	Air Shift		x	x
A	Air Shift 1-Pole Indicator Switch	x		
V	Air Shift w/o Installation Kit	x	x	
Y	Lever Shift			x
Output				
XK	SAE “B” 2 or 4-Bolt Flange, SAE “B” Shaft (7/8" - 13T)	w	w	x
XV	1410 Series Flange	w	w	x
XY	ISO 7653 Pump Mount DIN 5462 Shaft	w	x, w	

w = Wet Spline Option
NOTE: Always check current price book for available options

Installation Kits

Series/ Application	Air Shift	Electric Over Air		Volvo I-Shift Mack mDrive	Electric Over Air (ZF-AS Tronic) 12 Volt
		12 Volt	24 Volt		
511	328388-98X	328388-47X	328388-48X	329809X	N/A
523	328388-101X	328388-104X	328388-110X	329809X	328388-82X
541	328388-61X	N/A	N/A	N/A	N/A

N/A – Non Applicable

Parker Hannifin Corporation
Chelsea Products Division
Olive Branch, MS 38654 USA

PTO Options Chart – PowerShift PTOs		247	249	249V	252
Lubrication					
P	Pressure Lube	x			x
X	No Pressure Lube		x	x	x
Shifting					
B	12V Elec/Hyd	x	x	x	x
K	12V Elec/Hyd w/ EOC	x	x	x	
Output					
AD	SAE “A” 2-Bolt Flange (3/4" - 11T)	x	x		x
XB	1" Round Shaft w/ 1/4" Key				x
XD	Rd Standard Shaft (1-1/4" - 5/16" Key)	x	x		
XE	SAE “A” 2-Bolt Flange (5/8" - 9T)	x			x
XP	Special SAE “A” Pilot 2-Bolt Flange, SAE “B” Shaft (7/8" - 13T)	x	x		
P37	CGP-P11C037-5AC				x
P42	CGP-P11C042-5AC				x
P71	CGP-P11C071-5AC				x
P82	CGP-P11C082-5AC				x
1116	CGP-P11C016-1AC				x
1121	CGP-P11C021-1AC				x
1126	CGP-P11C026-1AC				x
1137	CGP-P11C037-1AC				x
1462	CGP-P31C061-1AE				x
16	Hyd. Pump 2.9 GPM @1200 Engine RPM (3/4" - 11T)	x			
26	Hyd. Pump 5.3 GPM @1200 Engine RPM (3/4" - 11T)	x			
37	Hyd. Pump 6.8 GPM @1200 Engine RPM (3/4" - 11T)	x			
42	Hyd. Pump 7.8 GPM @1200 Engine RPM (3/4" - 11T)	x			
55	Hyd. Pump 10.2 GPM @1200 Engine RPM (3/4" - 11T)	x			
61	Hyd. Pump 11.2 GPM @1200 Engine RPM (3/4" - 11T)	x			
66	Hyd. Pump 12.2 GPM @1200 Engine RPM (7/8" - 13T) (4 x 2 Only)	x			
71	Hyd. Pump 13.1 GPM @1200 Engine RPM (3/4" - 11T)	x			
82	Hyd. Pump 15.1 GPM @1200 Engine RPM (3/4" - 11T)	x			
86	Hyd. Pump 16.1 GPM @1200 Engine RPM (3/4" - 11T)	x			
87	Hyd. Pump 16.0 GPM @1200 Engine RPM (7/8" - 13T) (4 x 2 Only)	x			
14	Hyd. Pump 25.0 GPM @1200 Engine RPM (7/8" - 13T) (4 x 2 Only)	x			
08	Hyd. Pump 12.0 GPM @1000 Engine RPM (7/8" - 13T) (4 x 2 Only)		x		
09	Hyd. Pump 14.0 GPM @1000 Engine RPM (7/8" - 13T) (4 x 2 Only)		x		
11	Hyd. Pump 16.0 GPM @1000 Engine RPM (7/8" - 13T) (4 x 2 Only)		x		
15	Hyd. Pump 18.9 GPM @1000 Engine RPM (7/8" - 13T) (4 x 2 Only)		x		
16	Hyd. Pump 2.4 GPM @1000 Engine RPM (3/4" - 11T)		x		
26	Hyd. Pump 3.9 GPM @1000 Engine RPM (3/4" - 11T)		x		
32	Hyd. Pump 4.7 GPM @1000 Engine RPM (3/4" - 11T)		x		
37	Hyd. Pump 5.5 GPM @1000 Engine RPM (3/4" - 11T)		x		
42	Hyd. Pump 6.3 GPM @1000 Engine RPM (3/4" - 11T)		x		
55	Hyd. Pump 8.2 GPM @1000 Engine RPM (3/4" - 11T)		x		
61	Hyd. Pump 9.0 GPM @1000 Engine RPM (3/4" - 11T)		x		
71	Hyd. Pump 10.6 GPM @1000 Engine RPM (3/4" - 11T)		x		
82	Hyd. Pump 12.2 GPM @1000 Engine RPM (3/4" - 11T)		x		
87	Hyd. Pump 12.9 GPM @1000 Engine RPM (3/4" - 11T)		x		
V08	B08 Cartridge @ 1.61 in^3/rev			x	
V10	B10 Cartridge @ 2.08 in^3/rev			x	
V12	B12 Cartridge @ 2.26 in^3/rev			x	
V14	B14 Cartridge @ 2.81 in^3/rev			x	
V17	B17 Cartridge @ 3.56 in^3/rev			x	
V20	B20 Cartridge @ 3.89 in^3/rev			x	
V22	B22 Cartridge @ 4.29 in^3/rev			x	

NOTE: Always check current price book for available options
NOTE: 247 Series is used on Ford TorqShift™ Transmission MY 2010 and Prior. Not all pump options are currently available.

Options

Installation Kits			
Series Application	**Electric Over Hydraulic 12 Volt**		
	G - Metric Mount (Allison)	**D - Dodge/Aisin**	**R - Ram/Aisin**
252 w/o EOC	329296-8X	329296-9X	329669-12X

NOTE: Dodge/RAM Mounting Codes by Transmission Model Years
D: AS68RC (MY 2010 & Prior)
R: AS66RC (MY 2014 & Later Gas engine)
R: AS68RC (MY 2011 & 2012)
R: AS69RC (MY 2013 & Later Diesel engine)

Installation Kits						
Series Application	**Electric Over Hydraulic 12 Volt**					
	"B" Shift Option w/ "F" Mount	**"K" Shift Option w/ "G" Mount**	**"B" Shift Option w/ "F" Mount "V" Arrangement**	**"B" Shift Option w/ "G" Mount "V" Arrangement**	**"K" Shift Option w/"F" Mount**	**"K" Shift Option w/ "F" Mount "V" Arrangement**
249 w/o EOC	329651X	329804X	N/A	N/A	N/A	N/A
249V w/o EOC	N/A	N/A	329836X	329838X	N/A	N/A
249 w/ EOC	N/A	N/A	N/A	N/A	329652X	N/A
249V w/ EOC	N/A	N/A	N/A	N/A	N/A	329837X
247 w/o EOC	329600X	N/A	N/A	N/A	N/A	N/A
247 w/ EOC	N/A	N/A	N/A	N/A	329601X	N/A

NOTE: Use 329650X - Speed Limiter Control Assembly for all EOC applications
N/A – Non Applicable

Parker Hannifin Corporation
Chelsea Products Division
Olive Branch, MS 38654 USA

PTO Options Chart – PowerShift PTOs		272	282
Lubrication			
P	Pressure Lube	x	x
R	Valve Cap Rotated 120°	x	x
S	Valve Cap Rotated 240°	x	x
W	Wet Spline	x	x
X	No Pressure Lube	x	x
V	Valve Cap Rotated 120° w/ Wet Spline	x	x
Y	Valve Cap Rotated 240° w/ Wet Spline	x	x
Shifting			
B	12V Elec/Hyd	x	x
D	24V Elec/Hyd	x	x
E	12V Elec/Hyd w/o Installation Kit	x	x
N	24V Elec/Hyd w/o Installation Kit	x	x
K	12V Elec/Hyd Remote Valve w/ EOC	x	x
L	24V Elec/Hyd Remote Valve w/ EOC	x	x
G	12V Elec/Hyd Remote Valve w/o EOC	x	x
H	24V Elec/Hyd Remote Valve w/o EOC	x	x
R	12V Elec/Air w/ EOC - Remote	x	x
J	24V Elec/Air w/ EOC - Remote	x	x
P	12V Elec/Air Shift w/o EOC - Remote	x	x
Q	24V Elec/Air Shift w/o EOC - Remote	x	x
1	12V Elec/Air Shift w/o EOC - INTEGRAL	x	x
2	24V Elec/Air Shift Shift w/o EOC - INTEGRAL	x	x
3	12V Elec/Air Shift w/ EOC - INTEGRAL	x	x
4	24V Elec/Air Shift w/ EOC - INTEGRAL		
Output			
AB	DIN 120 Flange	x	x
AC	DIN 100 Flange	x	x
BA	1410 Flange w/ Drag Brake	x	x
BD	Rd Standard Shaft (1-1/4" - 5/16" Key) w/ Drag Brake	x	x
UN	UNI 8953 3-Bolt Pump Flange - 6T	x	x
XD	Rd Standard Shaft (1-1/4" - 5/16" Key)	x	x
XV	1-1/2" - 10T Spline Shaft with 1410 Flange	x	x
RF	Rotatable SAE “B” 2-Bolt Flange, SAE “BB” Shaft (1" - 15T)	x	x
RZ	Rotatable SAE “B” 2 or 4-Bolt Pump Flange, SAE “C” Shaft (1-1/4" - 14T)	x	x
RK	Rotatable SAE “B” 2 or 4-Bolt Pump Mount, SAE “B” (7/8" - 13T)	x	x
RS	Rotatable SAE “C” 2 or 4-Bolt Pump Mount, SAE “C” (1-1/4" - 14T)	x	x
RY	Rotatable ISO 7653 Pump Mount DIN 5462 Shaft	x	x

Options

272 Series Installation Kits

Shift Option	Input Gear	Mounting Option	Hydraulic						
			Integral				Remote		
			12V		24V		12V		24V
			w/o EOC	w/ EOC	w/o EOC	w/ EOC	w/o EOC	w/ EOC	w/o EOC
B	HV		329882-12X						
	KU	D	329884-12X						
D	HV				329882-24X				
E			Excludes Installation Kit						
N					Excludes Installation Kit				
G	AJ						329885-12X		
	HV						329842-12X		
	KU	D					329888-12X		
		R					329887-12X		
H	AJ								329885-24X
	HV								329842-24X
K	HV			329883X					
	KU	D, R		329886X					
L	HV					329883X			
	KU	D, R				329886X			

Shift Option	Input Gear	Manual Air Valve	Air							
			Integral				Remote			
			12V		24V		12V		24V	
			w/o EOC	w/ EOC	w/o EOC	w/ EOC	w/o EOC	w/ EOC	w/o EOC	w/ EOC
A		328388-113X								
1			329893-12X							
2					329893-24X					
3						329894-24X				
4	AJ									329889-24X
	HV									329890-24X
J				329894-12X						
P							329891-12X			
Q									329891-24X	
R	AJ							329889-12X		
	HV							329890-12X		
V		Excludes Installation Kit								

Parker Chelsea

Parker Hannifin Corporation
Chelsea Products Division
Olive Branch, MS 38654 USA

282 Series Installation Kits

Shift Option	Hydraulic					
	Integral				Remote	
	12V		24V		12V	24V
	w/o EOC	w/ EOC	w/o EOC	w/ EOC	w/o EOC	w/o EOC
B	328892-12X					
D			328892-24X			
E	Excludes Installation Kit					
G					329885-12X	
H						329885-24X
K		329900X				
L				329900X		
N			Excludes Installation Kit			

Shift Option	Manual Air Valve	Air							
		Integral				Remote			
		12V		24V		12V		24V	
		w/o EOC	w/ EOC	w/o EOC	w/ EOC	w/o EOC	w/ EOC	w/o EOC	w/ EOC
A	328388-113X								
J			329894-12X						
P						329891-12X			
Q								329891-24X	
R							329889-12X		
1		329893-12X							
2				329893-24X					
3					329894-24X				
4									329889-24X
V	Excludes Installation Kit								

PTO Options Chart – PowerShift PTO		852
Lubrication		
P	Pressure Lube	x
Shifting		
B	12V Elec/Hyd	x
D	24V Elec/Hyd	x
K	12V Elec/Hyd w/ EOC	x
L	24V Elec/Hyd w/ EOC	x
F	No Valve	x
Output		
XS	SAE “C” 4-Bolt, SAE “C” Shaft (1-1/4" - 14T)	x
XU	SAE “C” 2-Bolt, SAE “C” Shaft (1-1/4" - 14T)	x
XV	1410 Series Companion Flange	x

NOTE: Always check current price book for available options

PTO Options Chart – PowerShift PTOs	280	287	870	890	892
Lubrication					
P Pressure Lube	x	x	x		
R Pressure Lube & Valve Body Rotated 120°	x	x	x		
S Pressure Lube & Valve Body Rotated 240°	x	x	x		
Y Pressure Lube & Valve Body Rotated 240° w/ Wet Spline	x	x	x		
V Pressure Lube & Valve Body Rotated 120° w/ Wet Spline	x	x	x		
W Wet Spline	x	x	x	x	x
Shifting					
B 12V Elec/Hyd	x		x	x	x
D 24V Elec/Hyd	x		x	x	x
E 12V Elec/Hyd w/o Installation Kit	x		x		
N 24V Elec/Hyd w/o Installation Kit	x		x		
K 12V Elec/Hyd w/ EOC	x		x	x	x
L 24V Elec/Hyd w/ EOC	x		x	x	x
G 12V Elec/Hyd Valve w/o EOC - Remote	x		x	x	x
H 24V Elec/Hyd Valve w/o EOC - Remote	x		x	x	x
M Constant Mesh		x			
S Air Shift with PTO/Dump Pump Combo Valve w/ Kick Out w/ Neutral Spring Return	x				
T Air Shift with PTO/Dump Pump Combo Valve w/o Kick Out w/ Neutral Spring Return	x				
Output					
AB DIN 120 Flange	x	x	x	x	x
AC DIN 100 Flange	x	x	x	x	x
AF SAE “B” 2 or 4-Bolt Flange, SAE “BB” Shaft (1" - 15T)				w (5)	w (5)
AZ Non Standard Flange, SAE “C” Shaft (1-1/4" - 14T)				w (5)	w (5)
BA 1410 Flange w/ Drag Brake	x		x		
BD Rd Standard Shaft (1-1/4" - 5/16" Key) w/ Drag Brake	x				
BB DIN 120 Flange w/ Drag Brake			x		
BC DIN 100 Flange w/ Drag Brake			x		
CF SAE “B” 2 or 4-Bolt Flange, SAE “BB” Shaft (1" - 15T)				w (3)	w (3)
CK SAE “B” 2 or 4-Bolt Flange, SAE “B” Shaft (7/8" - 13T)				w (3)	w (3)
CS SAE “C” 4-Bolt Flange, SAE “C” Shaft (1-1/4" - 14T)				w (3)	w (3)
CZ SAE “B” 2 or 4-Bolt Flange, SAE “C” Shaft (1-1/4" - 14T)				w (3)	w (3)
DA SAE “D” 4-Bolt Flange (1-3/4" - 13T)				w (5)	w (5)
UN UNI 8953 3-Bolt Pump Flange - 6T	x	x			
XD Rd Standard Shaft (1-1/4" - 5/16" Key)	x	x			
XK SAE “B” 2 or 4-Bolt Flange, SAE “B” Shaft (7/8" - 13T)				w (5)	w (5)
XS SAE “C” 2 or 4-Bolt, SAE “C” Shaft (1-1/4" - 14T)				w (5)	w (5)
XV 1410 Series Companion Flange	x	x	x	x	x
XY ISO 7653 Pump Mount DIN 5462 Shaft				w	w
SB DIN 120 Flange w/ Smart Start	x				
SC DIN 100 Flange w/ Smart Start	x				
SD Rd Standard Shaft (1-1/4" - 5/16" Key) w/ Smart Start	x				
SV 1410 Series Companion Flange w/ Smart Start	x				
RF Rotatable SAE “B” 2-Bolt Flange, SAE “BB” Shaft (1" - 15T)	x, w	x, w	x, w		
RZ Rotatable SAE “B” 2 or 4-Bolt Pump Flange, SAE “C” Shaft (1-1/4" - 14T)	x, w	x, w	x, w		
RK Rotatable SAE “B” 2 or 4-Bolt Pump Mount, SAE “B” (7/8" - 13T)	x	x			
RS Rotatable SAE “C” 2 or 4-Bolt Pump Mount, SAE “C” (1-1/4" - 14T)	x, w	x, w	x, w		
RY Rotatable ISO 7653 Pump Mount DIN 5462 Shaft	x	x	x, w		

(3) = “3” Assembly Arrangement
(5) = “5” Assembly Arrangement
w = Wet Spline Option
NOTE: Always check current price book for available options

Parker Hannifin Corporation
Chelsea Products Division
Olive Branch, MS 38654 USA

Options

Installation Kits

Series Applicaton	Electric Over Hydraulic w/ Remote Valve		Electric Over Hydraulic		PTO/Dump (S)	PTO/Dump (T)
	12 Volt	24 Volt	12 Volt	24 Volt		
Allison (FJ)						
280/870 w/o EOC 280/870 w/ EOC	329237-12X	329237-24X	329024-12X 329076X	329024-24X 329076X		
280 w/ PTO Dump Pump Valve					328388-65X	328388-86X
890/892 w/o EOC 890/892 w/ EOC	329653-12X	329653-24X	329024-12X 329076X	329024-24X 329076X		
Caterpillar (KV)						
280/870 w/o EOC 280/870 w/EOC	329445-12X	329445-24X	329443-12X 329444X	329443-24X 329444X		
280 w/ PTO Dump Pump Valve					328388-65X	328388-86X

NOTE: Controls for Electronic Overspeed Control (EOC) - 329650X

Conversion Kits

Series Application	Electric Over Hydraulic w/ Remote Valve		Electric Over Hydraulic	
	12 Volt	24 Volt	12 Volt	24 Volt
(FJ & KV)				
280/870 w/ EOC	329354-12X	329354-24X		
Allison (FJ)				
280/870 w/o EOC			329175-12X	329175-24X
Caterpillar (KV)				
280/870 w/ EOC			329448-12X	329448-24X

Parker Hannifin Corporation
Chelsea Products Division
Olive Branch, MS 38654 USA

PTO Options Chart – Constant Mesh PTOs		267*	877	897	899
Lubrication					
P	Pressure Lube	x	x		
R	Valve Cap Rotated 120°				
S	Valve Cap Rotated 240°				
V	Valve Cap Rotated 120° w/ Wet Spline				
Y	Valve Cap Rotated 240° w/ Wet Spline				
W	Wet Spline	x	x	x	x
Shifting					
M	Constant Mesh	x	x	x	x
Output					
AB	DIN 120 Flange		x	x	x
AC	DIN 100 Flange		x	x	x
AF	SAE “B” 2 or 4-Bolt Flange, SAE “BB” Shaft (1" - 15T)	x, w		w (5)	w (5)
AK	SAE “B” 2-Bolt Flange, SAE “B” Shaft (7/8" - 13T)	x, w			
AW	SAE “B” 2 or 4-Bolt Flange, SAE “C” Shaft (1-1/4" - 14T)	x, w			
AZ	Non Standard Flange, SAE “C” Shaft (1-1/4" - 14T)	x		w	w
CF	SAE “B” 2 or 4-Bolt Flange, SAE “BB” Shaft (1" - 15T)			w (3)	w (3)
CK	SAE “B” 2 or 4-Bolt Flange, SAE “B” Shaft (7/8" - 13T)			w (3)	w (3)
CS	SAE “C” 4-Bolt Flange, SAE “C” Shaft (1-1/4" - 14T)			w (3)	w (3)
CZ	SAE “B” 2 or 4-Bolt Flange, SAE “C” Shaft (1-1/4" - 14T)			w (3)	w (3)
DA	SAE “D” 4-Bolt Flange (1-3/4" - 13T)			w	w
XD	Rd Standard Shaft (1-1/4" - 5/16" Key)	x	x		
XE	SAE “B” 2 or 4-Bolt Flange, SAE “A” Shaft (5/8" - 9T)	x			
XK	SAE “B” 2 or 4-Bolt Flange, SAE “B” Shaft (7/8" - 13T)	x		w (5)	w (5)
XQ	SAE “B” 2 or 4-Bolt Flange, SAE “B” Shaft (7/8" - 13T)	x			
XR	Chelsea Special (Cloverleaf), SAE “B” Shaft (7/8" - 13T)	x			
XS	SAE “C” 2 or 4-Bolt, SAE “C” Shaft (1-1/4" - 14T)			w (5)	w (5)
XV	1410 Series Companion Flange		x	w	w
XX	1-1/4" Tapered Output Shaft w/ Keyway	x			
XY	ISO 7653 Pump Mount DIN 5462 Shaft	x		w	w
ZS	SAE “C” 4-Bolt Flange, SAE “C” Shaft (1-1/4" - 14T)			w	
RC	Rotatable SAE “A” 2-Bolt Flange, SAE “A” Shaft (5/8" - 9T)	x			
RA	Rotatable SAE “B” 2-Bolt Flange, SAE “B” Shaft (7/8" - 13T)	x			
RF	Rotatable SAE “B” 2-Bolt Flange, SAE “BB” Shaft (1" - 15T)	x	x		
RF	Rotatable SAE “B” 2 or 4-Bolt Flange, SAE “BB” Shaft (1" - 15T)	x	x, w		
RB	Rotatable SAE “B” 4-Bolt Flange, SAE “B” Shaft (7/8" - 13T)	x	x		
RJ	Rotatable SAE “B” 2 or 4-Bolt Flange, SAE “BB” Shaft (1" - 15T)	x			
RZ	Rotatable SAE “B” 2 or 4-Bolt Pump Flange, SAE “C” Shaft (1-1/4" - 14T)		x, w		
RK	Rotatable SAE “B” 2 or 4-Bolt Pump Mount, SAE “B” (7/8" - 13T)		x, w		
RS	Rotatable SAE “C” 2 or 4-Bolt Pump Mount, SAE “C” (1-1/4" - 14T)		x, w		
RY	Rotatable ISO 7653 Pump Mount DIN 5462 Shaft	x, w	x, w		
GA	Greaseable SAE “B” 2-Bolt Rotatable Flange, SAE “B” Shaft (7/8" - 13T)	x			
GH	Greaseable SAE “B” 2-Bolt Rotatable Flange, SAE “BB” Shaft (1" - 15T)	x			
GB	Greaseable SAE “B” 4-Bolt Rotatable Flange, SAE “B” Shaft (7/8" - 13T)	x			
GK	Greaseable SAE “B” 2 or 4-Bolt Flange, SAE “B” Shaft (7/8" - 13T)	x			
GQ	Greaseable SAE “B” 2 or 4-Bolt Flange, SAE “B” Shaft (7/8" - 13T)	x			
GF	Greaseable SAE “B” 2 or 4-Bolt Flange, SAE “BB” Shaft (1" - 15T)	x			
GZ	Greaseable Non Standard Flange, SAE “C” Shaft (1-1/4" - 14T)	x			
GR	Greaseable Chelsea Special (Cloverleaf), SAE “B” Shaft (7/8" - 13T)	x			
GY	Greaseable ISO 7653 Pump Mount DIN 5462 Shaft	x			

* Any 267 Series using a “3” Arrangement requiring a SAE “B” Output must use the “XQ” or “AK” Output Option due to interference between the “XK” Flange and the Pressure Lube Fitting.
(3) = “3” Assembly Arrangement
(5) = “5” Assembly Arrangement
w = Wet Spline Option
NOTE: Always check current price book for available options

Parker Hannifin Corporation
Chelsea Products Division
Olive Branch, MS 38654 USA

For converting Chelsea PowerShift PTOs from a driveshaft output (“XD” or “XV”) to a pump flange output and/or a wet spline output.

267 Series

Pump Suffix	Kit Number	Assembly	Flange Type	Shaft Type
AF	328591-129X	3, 4, 5 & 6	SAE “B” 2 or 4-Bolt	1" - 15 Tooth Spline (BB)
AK	328591-141X	3, 4, 5 & 6	SAE “B” 2-Bolt	7/8" - 13 Tooth Spline (B)
AW	328591-129X	3, 4, 5 & 6	SAE “B” 2 or 4-Bolt	1-1/4" - 14 Tooth Spline (C)
AZ	328591-70X	3, 4, 5 & 6	Non Standard	1-1/4" - 14 Tooth Spline (C)
XE	328591-27X	3, 4, 5 & 6	SAE “A” 2 or 4-Bolt	5/8" - 9 Tooth Spline (A)
XK	328591-16X	4, 5 & 6	SAE “B” 2 or 4-Bolt	7/8" - 13 Tooth Spline (B)
XQ	328591-17X	3, 4, 5 & 6	SAE “B” 2 or 4-Bolt	7/8" - 13 Tooth Spline (B)
XR	328591-52X	3, 4, 5 & 6	Chelsea Special (Cloverleaf)	7/8" - 13 Tooth Spline (B)
XX	328591-122X	3, 4, 5 & 6	*1410 Series Companion Flange	1-1/4" Keyed Shaft Tapered
XY	328591-121X	3, 4, 5 & 6	ISO 7653 Pump Mount	DIN 5462
RC (Rotatable)	328591-112X	3, 4, 5 & 6	SAE “A” 2-Bolt	5/8" - 9 Tooth Spline (A)
RA (XR to RA) (Rotatable)	328591-55X 328591-53X	3, 4, 5 & 6	SAE “B” 2-Bolt	7/8" - 13 Tooth Spline (B)
RF (Rotatable)	328591-78X	3, 4, 5 & 6	SAE “B” 2-Bolt	1" - 15 Tooth Spline (BB)
RB (XR to RB) (Rotatable)	328591-56X 328591-54X	3, 4, 5 & 6	SAE “B” 4-Bolt	7/8" - 13 Tooth Spline (B)
RY (Rotatable)	328591-132X	3, 4, 5 & 6	ISO 7653 Pump Mount	DIN 5462
GA (Greaseable)	328591-72X	3, 4, 5 & 6	SAE “B” 2-Bolt Rotatable	7/8" - 13 Tooth Spline (B)
GH (Greaseable)	328591-116X	3, 4, 5 & 6	SAE “B” 2-Bolt Rotatable	1" - 15 Tooth Spline (BB)
GB (Greaseable)	328591-74X	3, 4, 5 & 6	SAE “B” 4-Bolt Rotatable	7/8" - 13 Tooth Spline (B)
GK (Greaseable)	328591-89X	3, 4, 5 & 6	SAE “B” 2 or 4-Bolt	7/8" - 13 Tooth Spline (B)
GQ (Greaseable)	328591-91X	3, 4, 5 & 6	SAE “B” 2 or 4-Bolt	7/8" - 13 Tooth Spline (B)
GF (Greaseable)	328591-71X	3, 4, 5 & 6	SAE “B” 2 or 4-Bolt	1" - 15 Tooth Spline (BB)
GZ (Greaseable)	328591-93X	3, 4, 5 & 6	Non Standard	1-1/4" - 14 Tooth Spline (C)
GR (Greaseable)	328591-76X	3, 4, 5 & 6	Chelsea Special (Cloverleaf)	7/8" - 13 Tooth Spline (B)
GY (Greaseable)	328591-92X	3, 4, 5 & 6	ISO 7653 Pump Mount	DIN 5462

* Supplied by customer

PTO Options Chart – Rear Mount PTOs		560	590	CAT-D	CAT-H
Mounting Designator					
LA	Caterpillar CX Series	x	x	x	x
FJ	Allison TC10		x		
Lubrication					
X	Standard Lube			x	x
W	Wet Spline	x	x		x
Shifting					
B	12V Elec/Hyd	x	x		x
D	24V Elec/Hyd	x			x
M	Constant Mesh			x	
Output					
AF	SAE “B” 2 or 4-Bolt Flange, SAE “BB” Shaft (1" - 15T)			x, w	
AZ	Non Standard Flange, SAE “C” Shaft (1-1/4" - 14T)			x, w	
CF	SAE “B” 2 or 4-Bolt Flange, SAE “BB” Shaft (1" - 15T)		w		
CK	SAE “B” 2 or 4-Bolt Flange, SAE “B” Shaft (7/8" - 13T)		w		
CS	SAE “C” 4-Bolt Flange, SAE “C” Shaft (1-1/4" - 14T)		w		
CZ	SAE “B” 2 or 4-Bolt Flange, SAE “C” Shaft (1-1/4" - 14T)		w		
XD	Rd Standard Shaft (1-1/4" - 5/16" Key)				x
XK	SAE “B” 2 or 4-Bolt Flange, SAE “B” Shaft (7/8" - 13T)			x, w	x, w
XV	1410 Series Companion Flange			x	
XY	ISO 7653 Pump Mount DIN 5462 Shaft			x, w	
17	B17 Cartridge 18.48 GPM at 1200 Pump RPM	x			
22	B22 Cartridge 22.28 GPM at 1200 Pump RPM	x			
25	B17 Cartridge 25.14 GPM at 1200 Pump RPM	x			
31	B17 Cartridge 31.70 GPM at 1200 Pump RPM	x			

w = Wet Spline Option
NOTE: Always check current price book for available options

560 Integral Vane Pump Options

Model Code	Part Number	Vendor Description	Displacement in³/rev [ml/rev]	Flow (1) GPM [l/m]	Max Pressure PSI [Bar] (2)		Speed RPM (3)	
					Intermittent	Continuous	Minimum	Maximum
17	380418-17	CARTR T6CM UNIT CCW S1	3.56 [58.3]	18.48 [70.0]	4000 [275]	3500 [240]	400	2800
22	380418-22	CARTR T6CM UNIT CCW S1	4.29 [70.3]	22.28 [84.4]	4000 [275]	3500 [240]	400	2800
25	380418-25	CARTR T6CM UNIT CCW S1	4.84 [79.3]	25.14 [95.2]	4000 [275]	3500 [240]	400	2500
31	380418-31	CARTR T6CM UNIT CCW S1	6.10 [100.0]	31.70 [119.9]	3000 [210]	2300 [160]	400	2500

(1) Flow at 1200 RPM pump speed, 960 engine RPM and 0 PSI
(2) Pressures are stated for antiwear petroleum base fluid only
(3) Based on antiwear petroleum or non antiwear petroleum base fluid.
For synthetic fluids, water in oil emulsions or water glycols MAX RPM is 1800.
NOTE: Contact Chelsea for availability of other cartridge sizes.

Options

PTO Options Chart – Split Shaft PTOs		901	912	941
Shifting				
A	Air Shift	x	x	x
Y	Lever Shift	x	x	x
Input-Output Shaft				
C	1-3/4" - 10 Tooth	x		
G	2-3/4" Shaft w/ 1710 1/2 Rd. Yoke		x	
H	2-3/4" Shaft w/ 1810 1/2 Rd. Yoke		x	
J	Shipped w/o Companion Flange		x	x
K	1410 Series Flange			x
L	1550 Series Flange			x
M	2-3/4" Shaft w/ 1610 Companion Flange		x	
P	Output Shaft for Spicer 170-4-521-1X		x	
S	Output Shaft for Spicer 250-4-241-1X		x	
PTO Output Shaft				
XK	SAE "B" 2 or 4-Bolt Flange, SAE "B" Shaft (7/8" - 13T)	x		
XS	SAE "C" 2 or 4-Bolt, SAE "C" Shaft (1-1/4" - 14T)	x		
XU	SAE "C" 2-Bolt Flange, SAE "C" Shaft (1-1/4" - 14T)	x		
XV	1410 Series Companion Flange	x		
XX	1-1/4" Tapered Output Shaft w/ Keyway		x	
XX	Two 6-Bolt Openings			x

Specifications Chart – 901 Series	
Standard Output Shaft Size	— 1-3/4" - 10 Tooth —
Intermittent Torque Rating (lbs-ft)	500
Intermittent Torque Rating (Nm)	678
Horsepower Rating for Intermittent Service	
At 500 RPM of the Output Shaft (HP)	48
At 1000 RPM of the Output Shaft (HP)	95
At 500 RPM of the Output Shaft (Kw)	36
At 1000 RPM of the Output Shaft (Kw)	75
Approximate Weight:	— 185 lbs. [84 kg] —

Specifications Chart – 912 Series		
Standard Output Shaft Size	— 2-3/4" - 10 Tooth —	
Max Thru Torque Capacity	lbs-ft	Nm
w/ Diesel Engine		
Automatic Transmission	13,000	17,625
Manual Transmission	12,000	16,270
w/ Gas Engine		
Automatic Transmission	16,000	21,693
Manual Transmission	15,000	20,337
Approximate Weight:	— 130 lbs. [59 kg] —	

Specifications Chart – 941 Series		
Standard Output Shaft Size	— 1-1/2" - 12 Tooth —	
Max Thru Torque Capacity	lbs-ft	Nm
w/ Diesel Engine		
Automatic Transmission	3,100	4,203
Manual Transmission	2,900	3,932
w/ Gas Engine		
Automatic Transmission	4,200	5,694
Manual Transmission	3,900	5,288
Approximate Weight:	— 60 lbs. [27 kg] —	

Parker Hannifin Corporation
Chelsea Products Division
Olive Branch, MS 38654 USA

PTO Options Chart – Crank Shaft PTO		2442
Shifting		
H	24V Elec/Hyd Valve w/o EOC - Remote	x
P	12V Elec/Air Shift	x
C	Special Shift Control & Bracket Kit	x
M	Constant Mesh	x
A	Air Shift	x
S	Air Shift with PTO/Dump Pump Combo Valve w/ Kick Out w/ Neutral Spring Return	x
T	Air Shift with PTO/Dump Pump Combo Valve w/o Kick Out w/ Neutral Spring Return	x
U	Air Shift with PTO/Dump Pump Combo Valve w/ Kick Out w/o Neutral Spring Return	x
V	Air Shift w/o Installation Kit	x
W	Wire Shift	x
X	Wire Shift w/o Cable & Knob	x
Output		
AF	SAE “B” 2 or 4-Bolt Flange, SAE “BB” Shaft (1" - 15T)	x
AK	SAE “B” 2-Bolt Flange, SAE “B” Shaft (7/8" - 13T)	x
AZ	Non Standard Flange, SAE “C” Shaft (1-1/4" - 14T)	x
XD	Rd Standard Shaft (1-1/4" - 5/16" Key)	x
XE	SAE “A” 2 or 4-Bolt Flange, SAE “A” Shaft (5/8" - 9T)	x
XK	SAE “B” 2 or 4-Bolt Flange, SAE “B” Shaft (7/8" - 13T)	x
XQ**	SAE “B” 2 or 4-Bolt Flange, SAE “B” Shaft (7/8" - 13T)	x
XR	Chelsea Special (Cloverleaf), SAE “B” Shaft (7/8" - 13T)	x
XX***	1-1/4" Tapered Output Shaft w/ Keyway	x
XY	ISO 7653 Pump Mount DIN 5462 Shaft	x
RC	Rotatable SAE “A” 2-Bolt Flange, SAE “A” Shaft (5/8" - 9T)	x
RD	Rotatable SAE “A” 2-Bolt Flange, SAE “B” Shaft (7/8" - 13T)	x
RA	Rotatable SAE “B” 2-Bolt Flange, SAE “B” Shaft (7/8" - 13T)	x
RF	Rotatable SAE “B” 2-Bolt Flange, SAE “BB” Shaft (1" - 15T)	x
RB	Rotatable SAE “B” 4-Bolt Flange, SAE “B” Shaft (7/8" - 13T)	x
RE	Rotatable SAE “B” 4-Bolt Flange, SAE “BB” Shaft (1" - 15T)	x
RY	Rotatable ISO 7653 Pump Mount DIN 5462 Shaft	x
GA	Greaseable SAE “B” 2-Bolt Rotatable Flange, SAE “B” Shaft (7/8" - 13T)	x
GH	Greaseable SAE “B” 2-Bolt Rotatable Flange, SAE “BB” Shaft (1" - 15T)	x
GB	Greaseable SAE “B” 4-Bolt Rotatable Flange, SAE “B” Shaft (7/8" - 13T)	x
GK	Greaseable SAE “B” 2 or 4-Bolt Flange, SAE “B” Shaft (7/8" - 13T)	x
GQ**	Greaseable SAE “B” 2 or 4-Bolt Flange, SAE “B” Shaft (7/8" - 13T)	x
GF	Greaseable SAE “B” 2 or 4-Bolt Flange, SAE “BB” Shaft (1" - 15T)	x
GZ	Greaseable Non Standard Flange, SAE “C” Shaft (1-1/4" - 14T)	x
GR	Greaseable Chelsea Special (Cloverleaf), SAE “B” Shaft (7/8" - 13T)	x
GY	Greaseable ISO 7653 Pump Mount DIN 5462 Shaft	x

** XQ/GQ same as XK/GK except flange rotated 90°
*** Order companion (379824) separately
w = Wet Spline Option
NOTE: Always check current price book for available options

Parker Hannifin Corporation
Chelsea Products Division
Olive Branch, MS 38654 USA

Options

For converting the 2442 Series Chelsea PTOs from a driveshaft output or as listed to a new pump flange output, use the following kits. Consult the Chelsea price book for availability by series.

Pump Suffix	Kit Number Suffix	Kit Number	Flange Type	Shaft Type
AF	XD to AF	328591-30X	SAE “B” 2 or 4-Bolt	1" - 15 Tooth Splined (BB)
AK	XD to AK	328591-28X	SAE “B” 2-Bolt	7/8" - 13 Tooth Splined (B)
AZ	XD to AZ	328591-70X	Non Standard	1-1/4" - 14 Tooth Splined (C)
XE	XD to XE	328591-27X	SAE “A” 2 or 4-Bolt	5/8" - 9 Tooth Splined (A)
XK	XK to GK	328591-86X	SAE “B” 2 or 4-Bolt	7/8" - 13 Tooth Splined
XQ	XD to XQ	328591-17X	SAE “B” 2 or 4-Bolt	7/8" - 13 Tooth Splined (B)
XR	XD to XR	328591-52X	Chelsea Special (Cloverleaf)	7/8" - 13 Tooth Splined (B)
XX	XD to XX	328591-122X	1410 Companion Flange	1-1/4" SAE Tapered
XY	XD to XY	328591-121X	ISO 7653 Pump Mount	DIN 5462 Splined
RC (Rotatable)	XD to RC	328591-112X	SAE “A” 2-Bolt	7/8" - 9 Tooth Splined (A)
RD (Rotatable)	XD to RD	328591-113X	SAE “A” 2-Bolt	7/8" - 13 Tooth Splined (B)
RA (Rotatable)	XD to RA	328591-55X	SAE “B” 2-Bolt	7/8" - 13 Tooth Splined (B)
RF (Rotatable)	XD to RF	328591-78X	SAE “B” 2-Bolt	1" - 15 Tooth Splined (BB)
RB (Rotatable)	XD to RB	328591-56X	SAE “B” 4-Bolt	7/8" - 13 Tooth Splined (B)
RE (Rotatable)	XD to RE	328591-134X	SAE “B” 4-Bolt	1" - 15 Tooth Splined (BB)
RY (Rotatable)	XD to RY	328591-131X	ISO 7653 Pump Mount	DIN 5462 Splined
GA (Greaseable)	XD to GA XR to GA RA to GA	328591-72X 328591-73X 328591-106X	SAE “B” 2-Bolt Rotatable	*7/8" - 13 Tooth Splined (B)
GH (Greaseable)	XD to GH RF to GH	328591-116X 328591-114X	SAE “B” 2-Bolt Rotatable	*1" - 15 Tooth Splined (BB)
GB (Greaseable)	XD to GB XR to GB RB to GB	328591-74X 328591-75X 328591-107X	SAE “B” 4-Bolt Rotatable	*7/8" - 13 Tooth Splined (B)
GK (Greaseable)	XD to GK	328591-99X	SAE “B” 2 or 4-Bolt	7/8" - 13 Tooth Splined
GQ (Greaseable)	XD to GQ XQ to GQ	328591-91X 328591-86X	SAE “B” 2 or 4-Bolt	*7/8" - 13 Tooth Splined (B)
GF (Greaseable)	XD to GF AF to GF	328591-71X 328591-108X	SAE “B” 2 or 4-Bolt	*1" - 15 Tooth Splined (BB)
GZ (Greaseable)	XD to GZ AZ to GZ	328591-93X 328591-88X	SAE “B” 4-Bolt	*1-1/4" - 14 Tooth Splined (C)
GR (Greaseable)	XD to GR	328591-76X	Chelsea Special (Cloverleaf)	*7/8" - 13 Tooth Splined (B)
GY (Greaseable)	XD to GY XY to GY	328591-92X 328591-87X	ISO 7653 Pump Mount	*DIN 5462 Spline

*Grease fitting on end of shaft
NOTE: Contact Chelsea Customer Service for kits not listed.

A Guide to Specifying Chelsea Geared Adapters

When you need to change PTO output shaft rotation or clear a mounting obstacle, a geared adapter may be required. However, it is important to note the following:

- Geared adapters will change the direction of PTO rotation. Consider this when specifying driven equipment.
- Not all applications can use geared adapters. These situations are called out on the bottom of the Chelsea applications catalog pages. Check there before you spend time trying to specify a geared adapter.
- If an application cannot use an adapter, consider changing the PTO assembly arrangement, moving the PTO to the other side of the transmission, or using a change rotation gear box.
- Adapters are not available for use with PTOs on automatic transmissions except the Allison 1000, 2000/2400 Series.
- Adapters are not available for use with 8-Bolt PTOs.
- Current model Chelsea adapters do not change the PTO speed.

Parker Hannifin Corporation
Chelsea Products Division
Olive Branch, MS 38654 USA

Options

Standard Geared Adapter Assemblies					
Assembly Number	Figure Number	Number of Teeth	A Body Thickness or Degree of Angularity	B Pitch Line to Outer Face	C Pitch Line to Inner Face
328530-1X	1	22	1.650"	1.085"	3.100"
328530-2X	1	18	1.650"	1.117"	3.067"
328554-1X	2	19	22°	1.085"	1.110"
329138X,-1X	3	24	49°	1.085"	1.085"

Figure 1

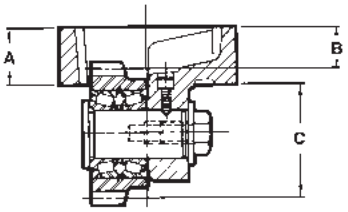

328530-1X
328530-2X

Where Used

328530-1X, -2X:
Use on either side, any assembly arrangement, where the transmission gear pitch and pressure angle allows. These adapters will move the PTO straight out from the transmission. These are deep reach geared adapters that generally require the use of extra spacers and special stud kits.

Figure 2

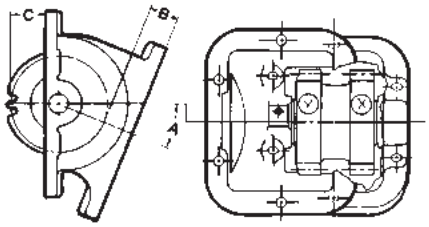

328554-1X

328554-1X:
Use on the R.H. side of transmissions with a 6 pitch 20° pressure angle PTO drive gear located towards the front of the opening. The adapter will move the PTO down and towards the rear of the truck. Use a PTO with a “3” assembly and an “AH” gear designator. This adapter requires the application to be derated by 30%.

Figure 3

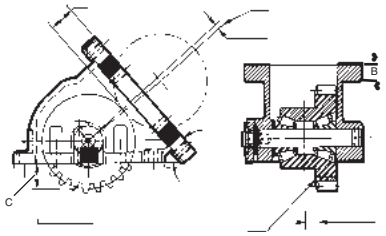

329138X,-1X

329138X:
Use on the R.H. side of transmissions with a 6 pitch 20° pressure angle PTO drive gear located towards the **front** of the truck, or on the L.H. when the PTO drive gear is located towards the **rear** of the truck. The adapter will drop the PTO down at a 49° angle. Use PTOs with the same assembly arrangement and gear detail as shown in the application catalog.

329138-1X:
Use on the R.H. side of transmissions with a 6 pitch 20° pressure angle PTO drive gear located towards the **rear** of the truck, or on the L.H. when the PTO drive gear is located towards the **front** of the truck. The adapter will drop the PTO down at a 49° angle. Use PTOs with the same assembly arrangement and gear detail as shown in the application catalog.

When a geared adapter can be used, four steps will help you specify it correctly.

1. Identify the correct gear detail and gear location.
2. Select the style that will perform the necessary function.
3. Calculate the correct backlash/spacing.
4. Select the correct stud kit.

Step 1: Identify the Gear Detail and Gear Location

The first step is to find adapters that will fit your application.

At the top of each transmission application page, Chelsea lists gear data. For example, on FLR-34, on the right hand side, the transmission gear is a 6 pitch, 20° spur gear (AH Input Gear). The transmission gear is forward of the centerline of the PTO opening.

To select an adapter for this application, look only at adapters that have a 6 pitch, 20° spur gear (AH Input Gear) that is forward of the adapter body centerline when used on the right hand side of a transmission.

NOTE: If gear pitch unknown contact Chelsea Customer Service.

Step 2: Select the Style

The second step is to further narrow down your choices according to your application requirement.

If the purpose of specifying a geared adapter is simply to change rotation, look for the least expensive adapter available. Typically, this means an adapter that will bring the PTO straight out from the transmission. Also check whether the adapter requires you to derate the PTO torque rating. This occurs when the adapter contains needle bearings rather than roller bearings.

If the purpose of specifying a geared adapter is to clear mounting obstacles, determine whether moving the PTO away from the transmission is enough, or whether it is necessary to angle the PTO down to clear the object.

Always keep in mind how much room you have to work with and what mounting obstacles exist.

For our example, let's say we have 328530-1X on the shelf and it looks like it will work.

Step 3: Calculate the Backlash and Spacing.

Next, you must establish correct backlash between the transmission and the geared adapter. To do this, calculate the adapter P.L. (pitch line) to inner face dimension minus the transmission pitch line to aperture face dimension.

On page 2.85 of this booklet, we see that the adapter P.L. (pitch line) to inner face dimension for adapter 328530-1X is 3.100. On FLR-34 application page, for the right hand opening, we see that the P.L. (pitch line) to aperture face dimension for the transmission is 1.0850.

3.100 (adapter pitch line to inner face dimension)
- 1.085 (transmission P.L. to aperture face dimension)
2.015

In this example, we would need to back the adapter away from the transmission gear 2.015" to establish correct backlash. We would select a 7-A-2000 filler block (page 2.22 of this booklet), and use a thin gasket (.010") on each side of the filler block.

Our theoretical backlash is .003". We need to have between .006" and .012". Most likely, once the adapter is actually mounted and backlash is measured, it will fall between the accepted range. This is because the transmission case and the adapter may vary a few thousandths from the listed measurements.

NOTE: It is always the responsibility of the installer to measure and establish correct backlash. Follow the instructions given in the PTO Owner's Manual and the Adapter Gears Owner's Manual.

Options

Step 4: Select the Correct Stud Kit

To calculate the necessary length of the mounting studs for a PTO/adapter combination, add the following dimensions together:

	Transmission Thread Depth
+	Lock Nut Thickness
+	Body Thickness of Adapter
+	Spacer/Filler Block Thickness
+	PTO mounting flange Thickness
+	Crush Thickness of Gaskets between the transmission, adapter, and PTO collectively
+	1/16" Extra Length
	Required Stud Length

Example:

	.500" – Transmission Thread Depth (Example Only)
+	.380" – Lock Nut Thickness
+	1.650" – 328530-1X Body Thickness of Adapter
+	.240" – 7-A-240 Spacer/Filler Block Thickness
+	.793" – PTO Mounting Flange Thickness
+	.024" – (4) 35-P-9-1 Gaskets - Crush Thickness
+	.0625" – Extra Length
	3.6495" (3.65") – Total Stud Length

Stud kit 328170-168X contains studs that are 3.750" long. Stud kits are listed in Chelsea publication HY25-2002-M1/US.

Remember that each application is different. It is up to the installer to make sure backlash between the transmission and adapter, and between the adapter and the PTO, is correct.

The 626, 628, 630 and 645 family of adapters are designed to simplify your selection and installation of a geared adapter when you require a change in rotation or are trying to clear an obstacle.

These adapters use the same input gears as the 442 and 489 Series PTOs, and are available in kits. The 626 adapter fits a 6-Bolt opening and moves the PTO straight out from the transmission. The 630 fits a 6-Bolt opening and angles the PTO down at a 30° angle. The 645 fits a 6-Bolt opening and angles the PTO down at a 45° angle. The 628 adapter fits an 8-Bolt transmission opening and accommodates a 6-Bolt PTO.

The 626, 630 and 645 adapter assemblies have the same pitch line to mounting face dimensions as the 442 Series, while the 628 will have the same mounting dimensions as the 489 Series. This means the same mounting hardware and spacers you use to mount the PTO to a specific application will be the same hardware you use to mount the geared adapter to that application.

Using the 626, 628, 630 or 645 will change the direction of PTO rotation. It will not change the speed of the PTO.

* A .010" gasket will compress to .006" if the capscrews or nuts are torqued properly. A .020" will compress to .012".

626 Series

Six Bolt to Six Bolt Straight

- 6-Bolt PTO for a 6-Bolt Transmission Opening
- Moves the PTO straight out from the transmission
- Uses the same input gears as the 442 and 489 Series
- Uses the same mounting hardware and spacers used to mount a 442 Series to a specific application

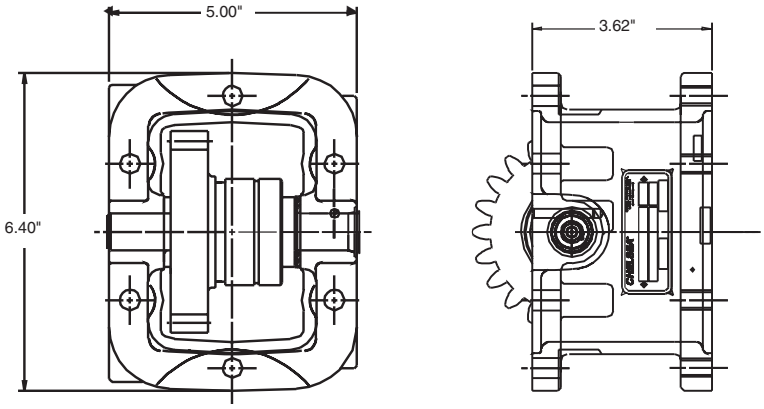

626 Series

628 Series

Eight Bolt to Six Bolt Straight

- 6-Bolt PTO for a 8-Bolt Transmission Opening
- Moves the PTO straight out from the transmission
- Uses the same input gears as the 442 and 489 Series
- Uses the same mounting hardware and spacers used to mount a 489 Series to a specific application

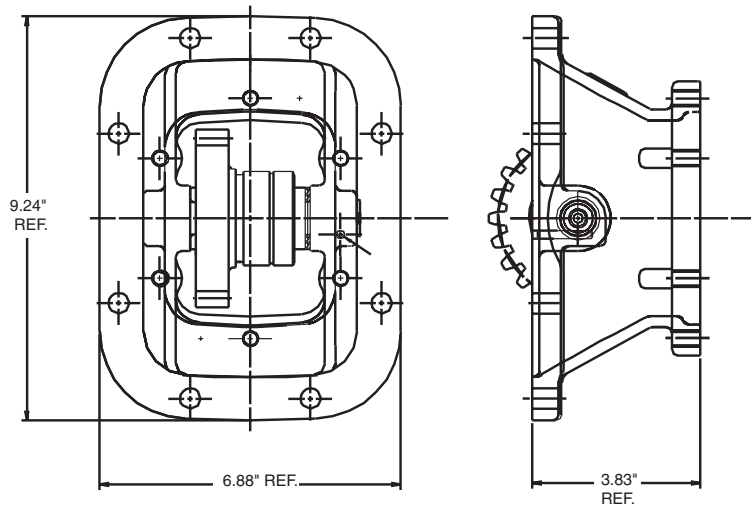

628 Series

Options

630 Series

Six Bolt to Six Bolt 30 Degrees

- 6-Bolt PTO for a 6-Bolt Transmission Opening
- Moves the PTO down at a 30° angle, helping to eliminate interference problems
- Uses the same input gears as the 442 and 489 Series

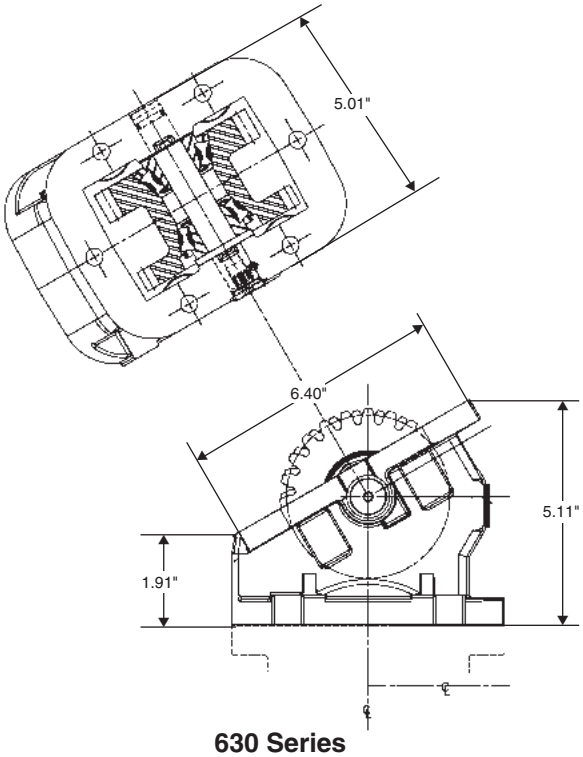

630 Series

645 Series

Six Bolt to Six Bolt 45 Degrees

- 6-Bolt PTO for a 6-Bolt Transmission Opening
- Moves the PTO down at a 45° angle, helping to eliminate interference problems
- Uses the same input gears as the 442 and 489 Series

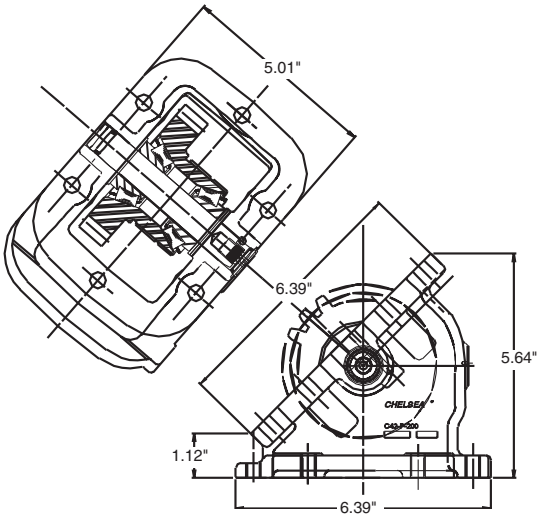

645 Series

Parker Hannifin Corporation
Chelsea Products Division
Olive Branch, MS 38654 USA

626 Gear Chart

Adapter Input Gear				Mounting Information PTO to Adapter		PTO Gear (Packaged Loose w/Adapter)			
Model No.	Part No.	Helix Angle	No. Teeth	Spacer Designator	Stud Kit	PTO Pitch	Part No.	Helix Angle	No. Teeth
626*AB	5-P-1001	Spur	19	7-A-140	7170-3X	—**AB	5-P-1001	Spur	19
626*AH	5-P-1004	Spur	22	7-A-140	7170-3X	—**AH	5-P-1004	Spur	22
626*AP	5-P-1006	Left Hand	21	7-A-140	7170-3X	—**GX	5-P-1183	Right Hand	21
626*AR	5-P-1008	Left Hand	21	7-A-187	7170-3X	—**GY	5-P-1184	Right Hand	21
626*BG	5-P-1015	Left Hand	23	7-A-140	7170-3X	—**HB	5-P-1187	Right Hand	23
626*BQ	5-P-1023	Left Hand	25	7-A-200	7170-4X	—**BP	5-P-1022	Right Hand	26
626*CD	5-P-1031	Left Hand	27	7-A-270	7170-4X	—**HE	5-P-1190	Right Hand	27
626*DA	5-P-1037	Spur	23	——	——	—**DA	5-P-1037	Spur	23
626*DU	5-P-1050	Left Hand	28	7-A-240	7170-4X	—**HH	5-P-1193	Right Hand	28
626*ED	5-P-1056	Left Hand	34	7-A-240	7170-4X	—**HK	5-P-1195	Right Hand	34
626*ES	5-P-1059	Left Hand	22	7-A-062	——	—**HL	5-P-1196	Right Hand	22
626*EV	5-P-1060	Spur	40	7-A-300	7170-4X	—**EV	5-P-1190	Right Hand	40
626*EW	5-P-1061	Left Hand	20	7-A-125	7170-3X	—**HM	5-P-1197	Right Hand	20
626*FN	5-P-1070	Left Hand	26	7-A-300	7170-4X	—**HR	5-P-1201	Right Hand	26
626*HY	5-P-1237	Left Hand	26	7-A-125	328170-94X	—**JB	5-P-1244	Right Hand	26
626*IT	KIT ADAPTER	——	——	——	——	——	——	——	——
626*JK	5-P-1261	Left Hand	24	7-A-187	7170-3X	—**JL	5-P-1262	Right Hand	24
626*JM	5-P-1263	Left Hand	22	7-A-125	7170-3X	—**JN	5-P-1264	Right Hand	22
626*JU	5-P-1316	Left Hand	25	7-A-200	7170-4X	—**KA	5-P-1318	Right Hand	25
626*JW	5-P-1319	Left Hand	23	7-A-093	7170-3X	—**KB	5-P-1321	Right Hand	23
626*KX	5-P-1411	Left Hand	26	7-A-125	328170-94X	—**KY	5-P-1412	Right Hand	26

628 Gear Chart

Adapter Input Gear				Mounting Information PTO to Adapter		PTO Gear (Packaged Loose w/Adapter)			
Model No.	Part No.	Helix Angle	No. Teeth	Spacer Designator	Stud Kit	PTO Pitch	Part No.	Helix Angle	No. Teeth
628*AB	5-P-1001	Spur	19	7-A-140	7170-3X	—**AB	5-P-1001	Spur	19
628*AH	5-P-1004	Spur	22	7-A-165	7170-3X	—**AH	5-P-1004	Spur	22
628*AR	5-P-1008	Left Hand	21	7-A-200	7170-3X	—**GY	5-P-1184	Right Hand	21
628*BG	5-P-1015	Left Hand	23	7-A-165	7170-3X	—**HB	5-P-1187	Right Hand	23
628*DA	5-P-1037	Spur	23	——	328170-76X	—**DA	5-P-1037	Spur	23
628*DU	5-P-1050	Left Hand	28	7-A-270	7170-5X	—**HH	5-P-1193	Right Hand	28
628*EV	5-P-1060	Spur	40	7-A-300	7170-5X	—**EV	5-P-1060	Spur	40
628*IT	KIT ADAPTER	——	——	——	——	——	——	——	——

Options

630 Gear Chart

Adapter Input Gear				Mounting Information PTO to Adapter		PTO Gear (Packaged Loose w/Adapter)			
Model No.	Part No.	Helix Angle	No. Teeth	Spacer Designator	Stud Kit	PTO Pitch	Part No.	Helix Angle	No. Teeth
630*AB	5-P-1001	Spur	19	7-A-140	7170-3X	—**AB	5-P-1001	Spur	19
630*AH	5-P-1004	Spur	22	7-A-140	7170-3X	—**AH	5-P-1004	Spur	22
630*AP	5-P-1006	Left Hand	21	7-A-140	7170-3X	—**GX	5-P-1183	Right Hand	21
630*AR	5-P-1008	Left Hand	21	7-A-187	7170-3X	—**GY	5-P-1184	Right Hand	21
630*BG	5-P-1015	Left Hand	23	7-A-140	7170-3X	—**HB	5-P-1187	Right Hand	23
630*BQ	5-P-1023	Left Hand	25	7-A-200	7170-4X	—**BP	5-P-1022	Right Hand	26
630*CD	5-P-1031	Left Hand	27	7-A-270	7170-4X	—**HE	5-P-1190	Right Hand	27
630*DA	5-P-1037	Spur	23	——	——	—**DA	5-P-1037	Spur	23
630*DU	5-P-1050	Left Hand	28	7-A-240	7170-4X	—**HH	5-P-1193	Right Hand	28
630*ED	5-P-1056	Left Hand	34	7-A-240	7170-4X	—**HK	5-P-1195	Right Hand	34
630*ES	5-P-1059	Left Hand	22	7-A-062	——	—**HL	5-P-1196	Right Hand	22
630*EV	5-P-1060	Spur	40	7-A-300	7170-4X	—**EV	5-P-1060	Spur	40
630*EW	5-P-1061	Left Hand	20	7-A-125	7170-3X	—**HM	5-P-1197	Right Hand	20
630*FN	5-P-1070	Left Hand	26	7-A-300	7170-4X	—**HR	5-P-1201	Right Hand	26
630*HY	5-P-1237	Left Hand	26	7-A-125	7170-1X	—**JB	5-P-1244	Right Hand	26
630*IT	KIT ADAPTER	——	——	——	——	——	——	——	——
630*JK	5-P-1261	Left Hand	24	7-A-187	7170-3X	—**JL	5-P-1262	Right Hand	24
630*JM	5-P-1263	Left Hand	22	7-A-125	7170-3X	—**JN	5-P-1264	Right Hand	22
630*JU	5-P-1316	Left Hand	25	7-A-200	7170-4X	—**KA	5-P-1318	Right Hand	25
630*JW	5-P-1319	Left Hand	23	7-A-093	7170-3X	—**KB	5-P-1321	Right Hand	23
630*KX	5-P-1411	Left Hand	26	7-A-125	328170-94X	—**KY	5-P-1412	Right Hand	26

645 Gear Chart

Adapter Input Gear				Mounting Information PTO to Adapter		PTO Gear (Packaged Loose w/Adapter)			
Model No.	Part No.	Helix Angle	No. Teeth	Spacer Designator	Stud Kit	PTO Pitch	Part No.	Helix Angle	No. Teeth
645*AB	5-P-1001	Spur	19	7-A-140	7170-3X	—**AB	5-P-1001	Spur	19
645*AH	5-P-1004	Spur	22	7-A-140	7170-3X	—**AH	5-P-1004	Spur	22
645*AP	5-P-1006	Left Hand	21	7-A-140	7170-3X	—**GX	5-P-1183	Right Hand	21
645*AR	5-P-1008	Left Hand	21	7-A-187	7170-3X	—**GY	5-P-1184	Right Hand	21
645*BQ	5-P-1023	Left Hand	25	7-A-200	7170-4X	—**BP	5-P-1022	Right Hand	26
645*CD	5-P-1031	Left Hand	27	7-A-270	7170-4X	—**HE	5-P-1190	Right Hand	27
645*DA	5-P-1037	Spur	23	——	——	—**DA	5-P-1037	Spur	23
645*DU	5-P-1050	Left Hand	28	7-A-240	7170-4X	—**HH	5-P-1193	Right Hand	28
645*ED	5-P-1056	Left Hand	34	7-A-240	7170-4X	—**HK	5-P-1195	Right Hand	34
645*ES	5-P-1059	Left Hand	22	7-A-062	——	—**HL	5-P-1196	Right Hand	22
645*EV	5-P-1060	Spur	40	7-A-300	7170-4X	—**EV	5-P-1060	Spur	40
645*EW	5-P-1061	Left Hand	20	7-A-125	7170-3X	—**HM	5-P-1197	Right Hand	20
645*FN	5-P-1070	Left Hand	26	7-A-300	7170-4X	—**HR	5-P-1201	Right Hand	26
645*HY	5-P-1237	Left Hand	26	7-A-125	328170-94X	—**HY	5-P-1244	Right Hand	26
645*HV	5-p-1300	Spur	24	7-A-140	328170-94X	—**HV	5-P-1300	Spur	24
645*IT	KIT ADAPTER	——	——	——	——	——	——	——	——
645*JK	5-P-1261	Left Hand	24	7-A-187	7170-3X	—**JL	5-P-1262	Right Hand	24
645*JM	5-P-1263	Left Hand	22	7-A-125	7170-3X	—**JN	5-P-1264	Right Hand	22
645*JU	5-P-1316	Left Hand	25	7-A-200	7170-4X	—**KA	5-P-1318	Right Hand	25
645*JW	5-P-1319	Left Hand	23	7-A-093	7170-3X	—**KB	5-P-1321	Right Hand	23
645*KX	5-P-1411	Left Hand	26	7-A-125	328170-94X	—**KY	5-P-1412	Right Hand	——

When these adapters or plates appear on a transmission application page or come with the PTO assembly, they MUST be used. There are no substitutes.

As with other Chelsea PTOs, these geared adapters will change PTO rotation, but they will not change PTO speed.

Geared Adapters and Plates for Import Transmissions

Transmission	Adapter Gear or Plate General Description	"A" Body Thickness or Degree of Angularity
Mitsubishi		
328997X **(1)**	M4, M5, M6, M5S5 Models FH100 & FK415, M6S5 Models FK455 & FM555, M6S6 Model FM555	45°
42-P-211 **(2)**	MO35S5 & MO38S6 (included with 447C PTO)	1.470"
Nissan		
42-P-190 **(2)**	MLS-61A, MLS-61B UD3000SD (included with 447A PTO)	1.329"

(1) This geared adapter adapts a non-standard opening on the transmission to a standard 6-Bolt opening. It will move the PTO straight out from the transmission by approximately the amount indicated in column "A".

(2) This is an adapter plate that converts the non-standard opening on the transmission to a standard 6-Bolt opening.

Options

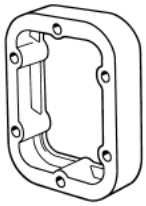

The lubricant in the transmission also lubricates the PTO. Therefore, one or more gaskets (as required) must always be used between the metal surfaces of the Power Take-Off, the adapter gear assembly, the adapter plate, and the filler block(s).

Mounting Gasket Kits

Gasket Kit Part Number	Quantity.	Gasket Part Number	Application
328570-1X	25	35-P-15-1 35-P-15-2	Standard 8 Bolt
328570-2X	10	35-P-15-1	Standard 8 Bolt
328570-3X	100	35-P-9-1	Standard 6 Bolt
328570-4X	100	35-P-9-2	Standard 6 Bolt
328570-6X	50	35-P-9-2	Standard 6 Bolt
329062-3X	25	35-P-56 329015X	328888X, 329011X, & Adapters
329062-5X	25	35-P-63-1 35-P-63-2	328957X Adapter
329062-7X	25	35-P-65	328962X & 328993X Adapters
329062-8X	25	35-P-67	328983X Adapter
329062-9X	25	35-P-68-1 35-P-68-2	328985X Adapter
329062-10X	25	35-P-72	328997X Adapter
329062-11X	25	35-P-73	329000-1X Adapter

Special Mounting Gaskets

Gasket Part Number	Application
35-P-41	272 X AAJ
35-P-69	272M Series Adapter Plate Mounting
35-P-74	267, 269, 280, 859, 870/877, 890/897
35-P-8	435, 437
35-P-84	231/271 Series PTO Mounting
22-P-120	247 Series
22-P-124	248 Series

Cable Controls Stainless Steel Vinyl Covered Wire

Assembly (Wire & Knob)	Wire Only	Knob Only
328346-10X*	378441-10 (10 Foot Length)	378502
328346-15X**	378441-15 (15 Foot Length)	378502
328346-20X	378441-20 (20 Foot Length)	378502
328346-25X	378441-25 (25 Foot Length)	378502
328346-30X	378441-30 (30 Foot Length)	378502

*This 10 foot cable and knob are standard on the following Chelsea PTOs with a "W" shifter type: 221, 260, 290, 352, 435, 442, 447, and 489.

** The 15 foot cable is standard on the 2442.

Gasket and Seal Kits

PTO Series Part Number	Gasket and Seal Kit	Shifter Cover Seal Kit Part Number		
		Cable Control	Lever Control	Air Control
221	328356-13X			
230	328356-55X 329043-13X (BD Output)			
231	328356-56X			
247	329376-1X			
249	329248-1X			
267	329337-2X			
270	328970X* 328971X*** 329043-18X (BA Output) 328356-21X			
271	328970X* 328971X*** 329043-18X (BA Output) 328356-22X			
272/282	329071-62X			
277/278	329071-33X (XY Output Only) 329071-19X			
280	329071-62X (All Except BA)			
290	328356-67X			328356-71X
442, 447, 660	328356-67X 328356-69X (A & C Ratio)	328356-15X	328356-26X	328356-17X
489, 680	328356-50X 328356-69X (A & C Ratio)	328356-15X	328356-26X	328356-17X
823 Standard Output (AB, AC & XV)			328356-2X	328356-2X
823 Direct Mount Output (XS & XU)			328356-4X	328356-4X
863	328356-39X			
870	329071-55X (XV, RS Output) 329071-55X (RZ, RY Output)			
880 Standard Output Pump Output	 328356-51X 328356-52X		 328356-53X 328356-53X	 328356-54X 328356-54X
890	329071-46X (XS, XK, AF, AZ) 329071-47X (XY)			
901	328267X			328356-40X
912 Speedometer w/o Speedometer	328356-65X 328356-63X 328356-64X		328356-62X	
2442 Top Unit Bottom Unit	 328356-15X 328356-13X	 328356-15X	 328356-26X	 328356-17X

* Seal, Gasket, Bearing, Clutch Pack Kit
** Seal, Gasket Bearing, Piston, Clutch Pack Kit
***Gasket, Seal, Bearing, Clutch Pack Kit w/Piston & Back-up Cylinder

Options

The kits shown below are included for standard applications. Many applications require special stud kits. These are called out on the application pages in the Chelsea HY25-3000/US catalog. Therefore, always consult the application pages in the Chelsea HY25-3000/US before specifying stud kits.

Mounting Kits

Series	Standard (X*)	Deep Mount (Z*)	Metric (G*)	Miscellaneous
CAT-D	7170-120X			7170-119X (XV)
CAT-H	7170-120X			
221	328170-1X	328170-26X		(R*) 328170-155X
230	328170-101X		7170-103X	
231			7170-104X	(M*) 7170-74X
236	328170-94X	328170-5X	7170-72X	
238	328170-200X	328170-200X	328170-201X	
247				(F) 8000-19X
249			8000-21X	(F) 8000-21X
249V			8000-45X	(F) 8000-45X
252			7170-102X (Allison)	7170-121X (RAM/Aisin)
267	7170-86X			(J*) 7170-87X
270	328170-101X		7170-103X	(A*) 328170-205X
271			7170-104X	(M*) 7170-74X
272	7170-129X	7170-131X	7170-72X	(M*) 7170-127X (A*, D*, R*) 7170-128X (E*) 7170-129X (N*) 7170-130X
277	7170-86X			
278	7170-107X			
280			7170-86X (FJ) 7170-117X (KV)	
282	328170-200X		328170-201X	(E*) 328170-200X
290	328170-76X		7170-72X	
340	328170-94X	328170-95X	7170-72X	(S*) 328170-95X
348	328170-209X	328170-209X	7170-120X	
352	328170-76X	328170-94X	7170-72X	
442	328170-76X	328170-77X	7170-72X	
447	328170-76X	328170-77X	7170-72X	
489	328170-200X	328170-200X	328170-201X	
541	328794-50X			
660	328170-76X	328170-77X	7170-72X	(D*) 7170-72X
680	328170-200X	328170-200X	7170-68X	
823	328170-8X		328170-185X	
852	328170-8X			
863	328170-8X		328170-185X	
870	7170-86X (FJ, LN), 7170-117X (KV)			
877	7170-86X (FJ, LN), 7170-117X (KV)			
880	328170-192X	328170-195X	328170-201X	
885	328170-192X			
890	7170-86X			
892	7170-86X			
897	7170-86X			
899	7170-86X			
626	328170-76X		7170-72X	7170-72X (626DJA*)
628	328170-209X	328170-209X	328170-201X	
630	328170-76X	328170-77X	7170-78X	7170-72X (630DJA*)
645	328170-76X	328170-77X	7170-78X	7170-72X (645DJA*)
329138X,-1X	328170-95X		7170-72X	
328481X	328170-128X			
328481G			8000-14X	
328564X	328170-127X			
328564G			8000-15X	

* This letter is the Mounting Type Designator found in the Model Number — Example: **442XSAHX-A3XK**

890 Family Bracket Kits

3000 Series Side Side

Model	Arr.	Kit Part Number	Mounting PTO Code	Description	Bracket	Pressure Hose	Lube Hose
890/897	5	329645-1X	L	Bracket Kit & Hose "L" Mount MD Left Side	50-P-60	329130-5X	329130-11X
890/897	5	329645-2X	R	Bracket Kit & Hose "R" Mount MD Right Side	50-P-61	329130-11X	329130-11X
890/897	5	329645-12X	M	Bracket Kit & Hose "M" Mount MD with Retarder Left Side	50-P-120	329130-5X	329130-11X
890/897	3	329645-13X	N	Bracket Kit & Hose "N" Mount MD Left Side with Cooler	50-P-151X	329130-5X	329130-11X

3000 Series Side Top

890/897	3	329645-21X	D	Bracket Kit & Hose "D" Mount HD with Cooler Left Side	50-P-152	329130-5X	329130-11X
890/897	5	329645-4X	E	Bracket Kit & Hose "E" Mount MD T/S Left Side	50-P-72	329130-5X	329130-11X
890/897	5	329645-5X	T	Bracket Kit & Hose "T" Mount MD T/S Top Right	50-P-67	329075-2X	329130-11X
890/897	5	329645-14X	F	Bracket Kit & Hose "F" Mount MD T/S with Retarder Left Side	*50-P-129	329130-5X	329130-11X
890/897	5	329645-15X	G	Bracket Kit & Hose "G" Mount MD T/S with Retarder Top Right Side	50-P-75	329075-2X	329130-11X

4000 Series 6-Speed

890/897	5	329645-3X	H	Bracket Kit & Hose "H" Mount HD Left Side	50-P-62	329130-4X	329130-11X
890/897	5	329645-6X	U	Bracket Kit & Hose "U" Mount HD Top	50-P-73	329075-2X	329130-11X
890/897	3	329645-7X	C	Bracket Kit & Hose "C" Mount HD with Cooler Left Side	50-P-74	329130-4X	329130-11X
890/897	3	329645-10X	J	Bracket Kit & Hose "J" Mount HD with Retarder Left Side	50-P-126	329130-4X	329130-11X
890/897	5	329645-11X	K	Bracket Kit & Hose "K" Mount HD with Retarder Top Right Side	50-P-127	329075-2X	329130-11X
890/897	5	329645-19X	P	Bracket Kit & Hose "P" Mount HD with Retarder Left Side	50-P-130	329130-4X	329130-11X

4700/4800 Series 7-Speed

892/899	5	329645-8X	H	Bracket Kit & Hose "H" Mount 4700 Left Side	50-P-62	329130-4X	329075-2X
892/899	5	329645-9X	U	Bracket Kit & Hose "U" Mount 4700 Top	50-P-73	329075-2X	329075-2X
892/899	3	329645-16X	C	Bracket Kit & Hose "C" Mount 4700 Left Side with Cooler	50-P-74	329130-4X	329075-2X
892/899	3	329645-17X	J	Bracket Kit & Hose "J" Mount 4700 with Retarder Left Side	50-P-126	329130-4X	329075-2X
892/899	5	329645-18X	K	Bracket Kit & Hose "K" Mount 4700 with Retarder Top Right Side	50-P-127	329075-2X	329075-2X
892/899	5	329645-22X	P	Bracket Kit & Hose "P" Mount 4700 with Retarder Left Side	50-P-130	329130-4X	329075-2X

Arr. = PTO Assembly Arrangement

Options

Options

PTO/Dump Pump Combo Valve:

This shift option is designed to make PTO/dump pump air shift applications safer and easier. The compact design features a safety interlock to prevent accidental PTO engagement, automatic PTO disengagement when in the “lower” position to prevent the PTO from being accidentally left in gear, and controlled lowering (feathering) for smooth dump body descent. The controls are easily operated, even when the driver is wearing gloves. It is ideal for use in systems with Chelsea dump pumps, wet line reservoirs, and PTOs.



Features							
Part Number	**PTO Kick Out**	**Spring Return to Neutral on Dump Valve Control**	**Manual Return to Neutral on Dump Valve**	**Safety Lock on PTO**	**Detent Lock on Neutral**	**Smooth Descent**	**LED Light**
Air Shift PTOs							
329214X & -2X	x	x		x	x	x	x
329316X & -2X			x	x	x	x	x
329358X	x		x	x	x	x	x
Hydraulic Shift PTOs							
329214-1X	x	x		x	x	x	x
329216-1X			x	x	x	x	x

Order Code	PTO Models	Chelsea Part No.	Installation Kit	Description
Air Shift PTOs				
S	442 & 489	329214X	328388-65X	Feathering & PTO Kick-out in “Lower” position Spring return to Neutral in “Raise” position
T	442 & 489	329316X	328388-72X	Feathering & NO PTO Kick-out in “Lower” position Detent in “Raise” position
U	442 & 489	329358X	328388-79X	Feathering & PTO Kick-out in “Lower” position Detent in “Raise” position
Hydraulic Shift PTOs				
S	280	329214-1X	328388-85X	Hoist/PTO control valve that allows a smooth descent of the body in the “lower” position. Features automatic disengagement of the PTO in “lower”. Lever on the control valve returns to neutral from the “raise” position when released (dead man’s handle).
S	272	329214-1X	328388-87X	
T	280	329216-1X	328388-86X	Hoist/PTO control valve that allows a smooth descent of the body in the “lower” position. Requires manual disengagement of the PTO in “lower”.
T	272	329216-1X	328388-88X	

Parker Hannifin Corporation
Chelsea Products Division
Olive Branch, MS 38654 USA

General Specifications						
Pump	**Gear Width**	**GPM US at 1000 RPM**	**Cubic Inch Displacement**	**Horsepower Input (at 2000 PSI) 1000 RPM**	**Maximum Pressure**	**Maximum Speed**
C101/102-20	2.000"	22	5.1	25.6	2500	2400 RPM
C101/102-25	2.500"	27.6	6.38	31	2500	2500 RPM
G101/102-1-0.7	.750"	6.4	1.48	6.2	2500	2500 RPM
G101/102-1-1.5	1.500"	12.8	2.96	13.7	2500	2500 RPM
G101/102-1-2.0	2.000"	17	3.94	18.8	2500	2500 RPM

All data based on SAE 10W oil at 150°F. Minimum pump speed at pressure is 800 RPM. US Gallons displacements are theoretical. They will vary depending on speed, pressure, and temperature.

Three-Line Installation (for intermittent or continuous operation)

With the internal sleeve installed in the pump and three-line installation, two advantages are provided:

A. Minimizes the possibility of overheating

B. The filter keeps the system clean for prolonged trouble-free operation.*

*If filter is used, check valve must be added to prevent backflushing filter.

Dump Pump 3-Line System Shown in the Neutral Mode (Continuous operation)

In the neutral mode, all the flow goes across the spool to the Return Port and back to tank because the internal by-pass passage is blocked by the sleeve in the inlet port. Any pressure higher than the setting of the relief valve is relieved internally through the by-pass to the Return Port.

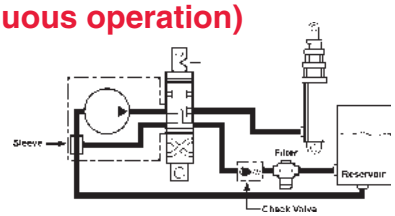

Two-Line Installation (for intermittent operation only)

With the internal sleeve removed a two-line hook-up can be arranged, however the oil circulates internally (within the pump). Continuous operation may result in overheating and damage to the pump.

Dump Pump 2-Line System Shown in the Neutral Mode

In the neutral mode, the flow goes across the spool to the Return Port and the integral by-pass passages. Because the Return Port is plugged, and the pressure drop through the by-pass is less than what is required to activate the cylinder, all flow goes through the by-pass back to the inlet side of the pump. Any pressure higher than the setting of the relief valve is relieved internally through the by-pass, back to the inlet port.

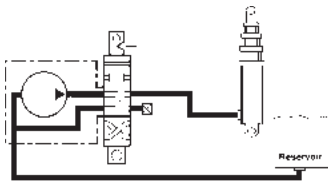

These pumps are shipped with an internal sleeve for three-line (continuous duty, filtered) systems. For two-line systems for intermittent duty cycles*, discard the sleeve.

*Pump/PTO operates 5 out of every 15 minutes. Note that three-line systems are always recommended to prolong the trouble-free operation of the hydraulic system.

Notes

Notes

Parker Hannifin Corporation
Chelsea Products Division
Olive Branch, MS 38654 USA

Notes

Parker Hannifin Corporation
Chelsea Products Division
Olive Branch, MS 38654 USA

Flange Drawings



Parker Chelsea

ENGINEERING YOUR SUCCESS.

Parker Hannifin Corporation
Chelsea Products Division
Olive Branch, MS 38654 USA

Output Option Code ..... 3.1 thru 3.48
AB ..... 3.1 thru 3.2
AC ..... 3.2 thru 3.4
AD ..... 3.4 thru 3.5
AF ..... 3.5 thru 3.6
AK 3.7
AZ ..... 3.7 thru 3.8
BA ..... 3.8 thru 3.9
BB 3.9
BC, BD 3.10
CF 3.11
CK 3.12
CS 3.13
CZ 3.14
DA, GA 3.15
GB, GF, GH 3.16
GK, GQ, GR 3.17
GS, GY 3.18
GZ, RA, RB 3.19
RC, RD, RE 3.20
RF 3.21
RK 3.22
RS ..... 3.23 thru 3.24
RY ..... 3.24 thru 3.25
RZ ..... 3.25 thru 3.26
SB 3.26
SC, SD, SV 3.27
SQ, UN 3.28
XD, XE 3.29
XK ..... 3.30 thru 3.33
XP ..... 3.33 thru 3.34
XQ 3.34
XR 3.35
XS ..... 3.35 thru 3.37
XU ..... 3.37 thru 3.38
XV ..... 3.38 thru 3.41
XX 3.41
XY ..... 3.41 thru 3.44
YY 3.44
ZS, 21-P-525 ..... 3.45

Parker Hannifin Corporation
Chelsea Products Division
Olive Branch, MS 38654 USA

Parker Hannifin Corporation
Chelsea Products Division
Olive Branch, MS 38654 USA

Option Code – AB
Type – Remote Mount
Shaft – DIN 120 Flange

PTO Series:
272 282

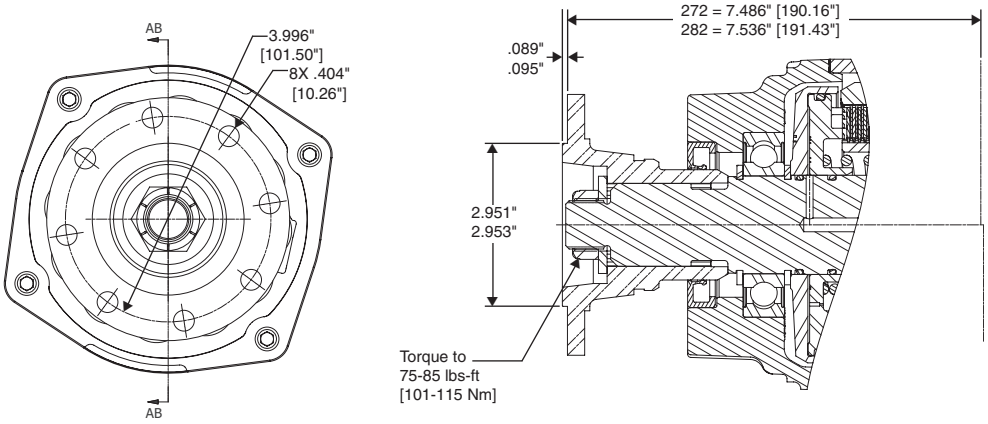

Option Code – AB
Type – Remote Mount
Shaft – DIN 120 Flange

PTO Series:
280 287

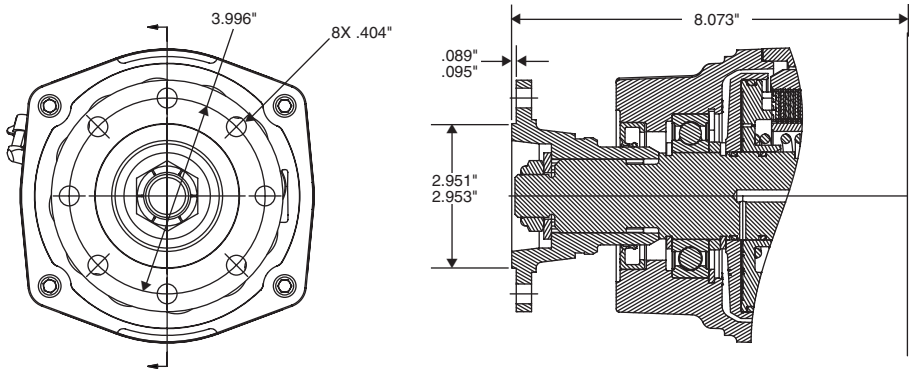

Option Code – AB
Type – Remote Mount
Shaft – DIN 120 Flange

PTO Series:
823

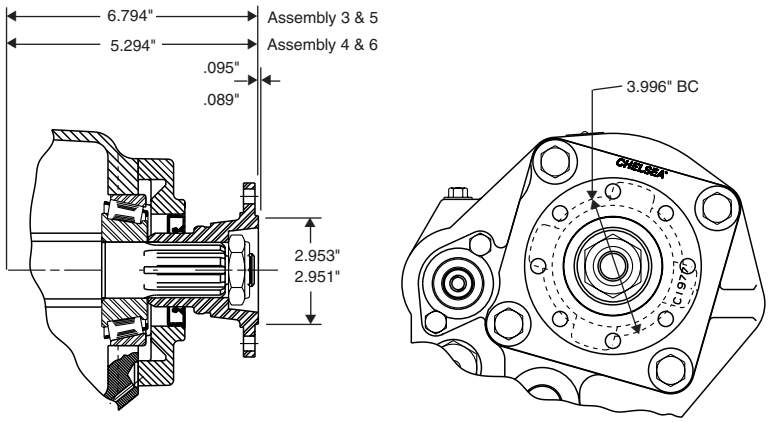

* Recommended Grease: Texaco Coupling Grease, Code 1912 or Equivalent

NOTE: PUMP INSTALLATION PRECAUTIONS
Pump support brackets may be required - see General Safety information section for pump support bracket requirements.
Also remember to pack the female PTO shaft with grease before installing the pump to the PTO.

Parker Hannifin Corporation
Chelsea Products Division
Olive Branch, MS 38654 USA

Option Code – AB
Type – Remote Mount
Shaft – DIN 120 Flange

PTO Series:
870 877

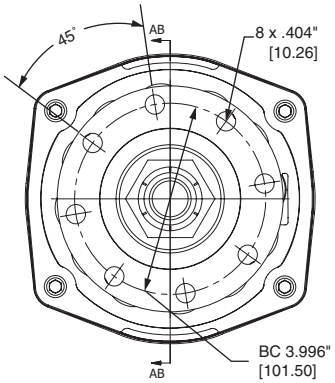

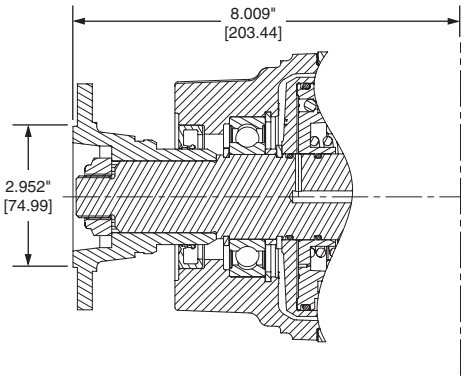

Option Code – AB
Type – Remote Mount
Shaft – DIN 120 Companion Flange

PTO Series:
890 897
892 899

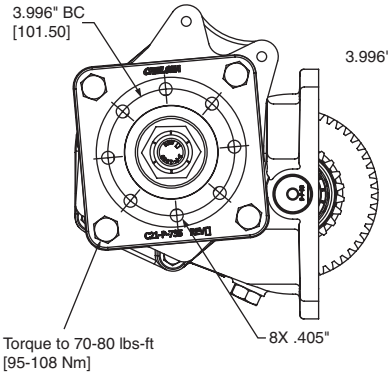

Ass'y "3"

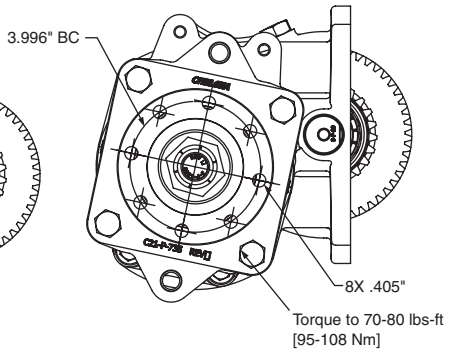

Ass'y "5"

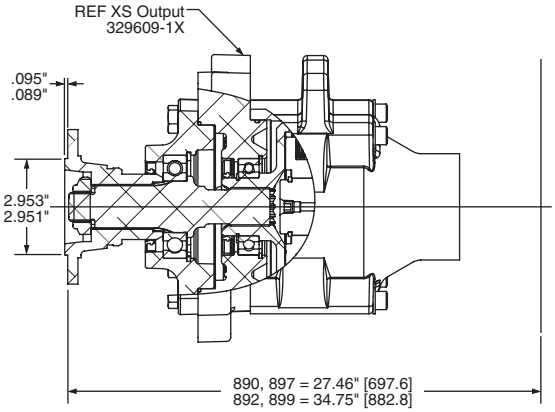

Ass'y "3" & "5"

Option Code – AC
Type – Remote Mount
Shaft – DIN 100 Flange

PTO Series:
272 282

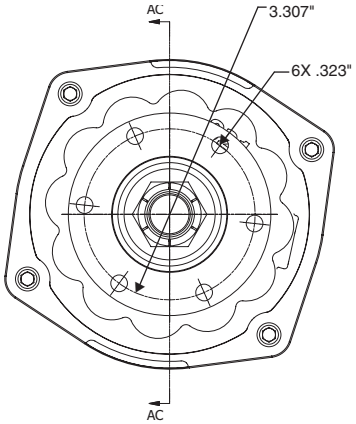

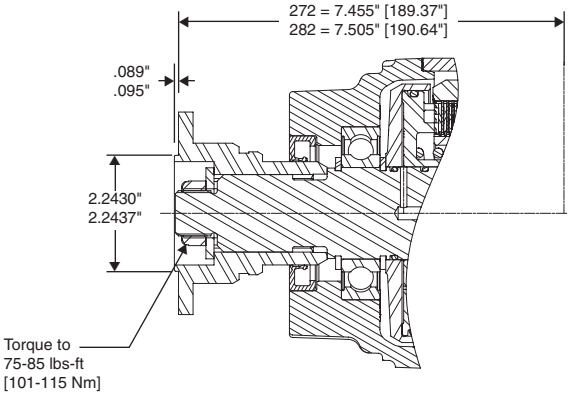

* Recommended Grease: Texaco Coupling Grease, Code 1912 or Equivalent

NOTE: PUMP INSTALLATION PRECAUTIONS
Pump support brackets may be required - see General Safety information section for pump support bracket requirements.
Also remember to pack the female PTO shaft with grease before installing the pump to the PTO.

Parker Hannifin Corporation
Chelsea Products Division
Olive Branch, MS 38654 USA

Option Code – AC
Type – Remote Mount
Shaft – DIN 100 Flange

PTO Series:
280 287

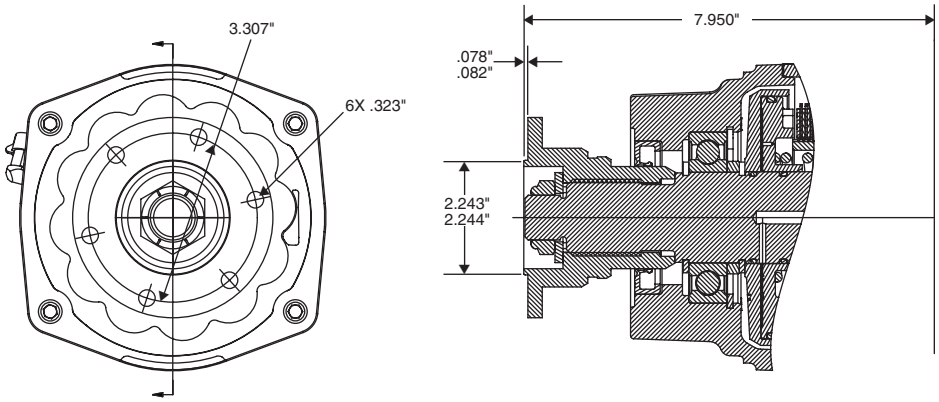

Option Code – AC
Type – Remote Mount
Shaft – DIN 120 Flange

PTO Series:
823

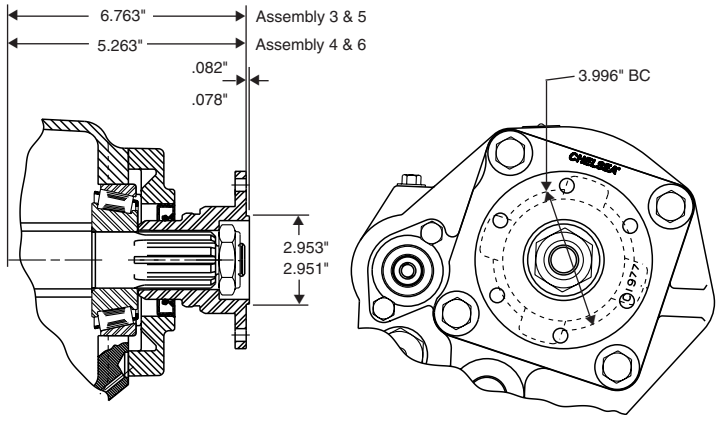

Option Code – AC
Type – Remote Mount
Shaft – DIN 100 Flange

PTO Series:
870 877

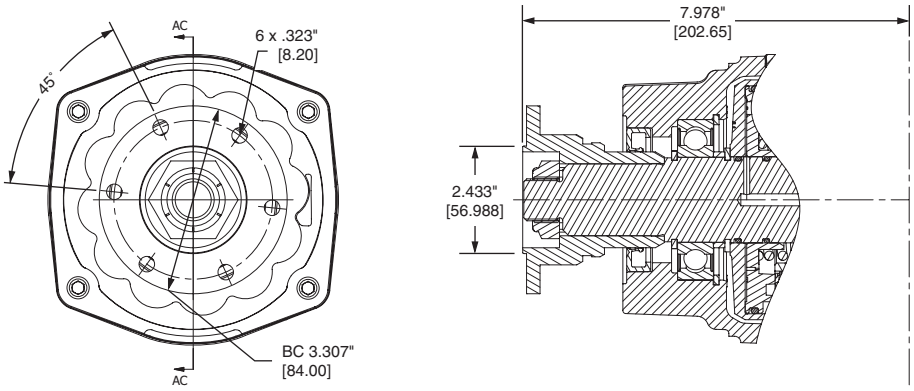

* Recommended Grease: Texaco Coupling Grease, Code 1912 or Equivalent

NOTE: PUMP INSTALLATION PRECAUTIONS
Pump support brackets may be required - see General Safety information section for pump support bracket requirements.
Also remember to pack the female PTO shaft with grease before installing the pump to the PTO.

Option Code – AC

Type – Remote Mount
Shaft – DIN 100 Flange

PTO Series:
890 897
892 899

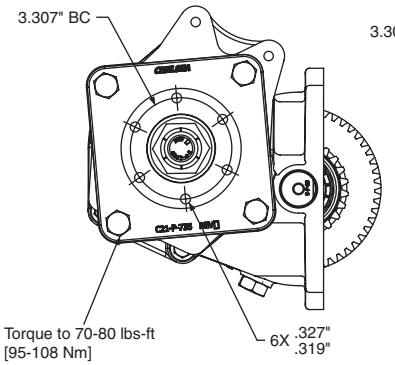

Ass'y "3"

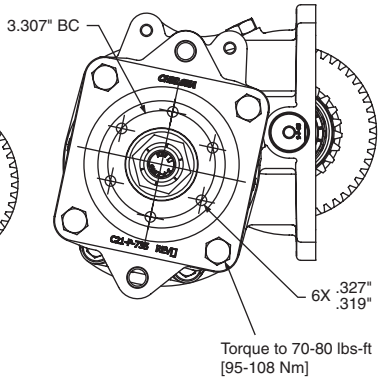

Ass'y "5"

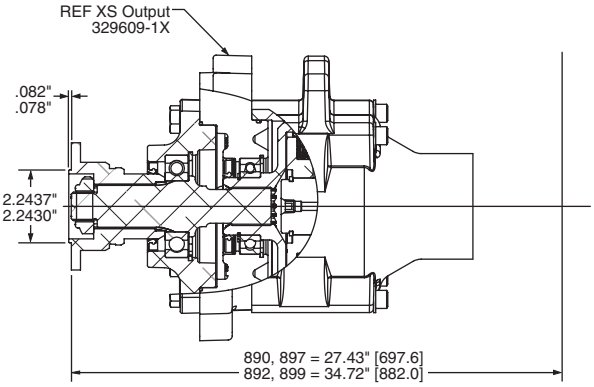

Ass'y "3" & "5"

Option Code – AD

Type – Direct Mount
Flange – SAE "A" 2-Bolt
Shaft – SAE 19-4 (3/4" - 11T)

PTO Series:
247

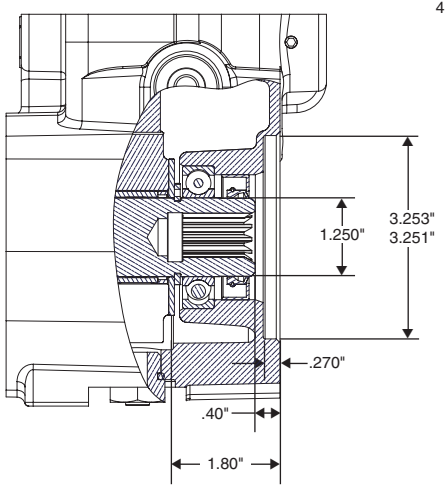

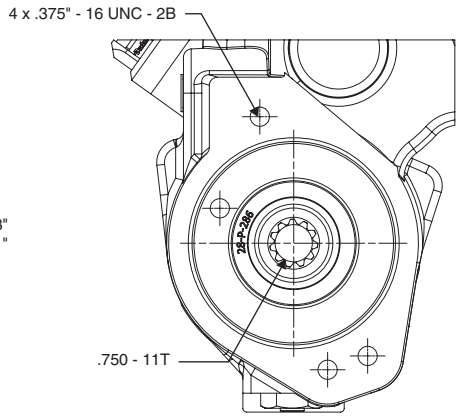

* Recommended Grease: Texaco Coupling Grease, Code 1912 or Equivalent

NOTE: PUMP INSTALLATION PRECAUTIONS
Pump support brackets may be required - see General Safety information section for pump support bracket requirements.
Also remember to pack the female PTO shaft with grease before installing the pump to the PTO.

Parker Hannifin Corporation
Chelsea Products Division
Olive Branch, MS 38654 USA

Option Code – AD
Type – Direct Mount
Flange – SAE “A” 2-Bolt
Shaft – SAE 19-4 (3/4" - 11T)

PTO Series:
249

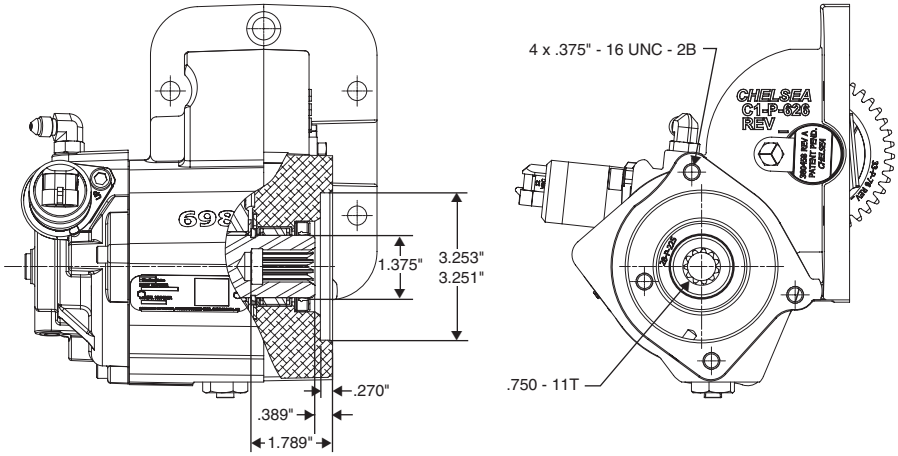

Option Code – AF
Type – Direct Mount
Flange – SAE “B” 2 or 4-Bolt
Shaft – SAE “BB” (1" - 15T)

PTO Series:

221	489
260	660
267	680
290	2442
447	

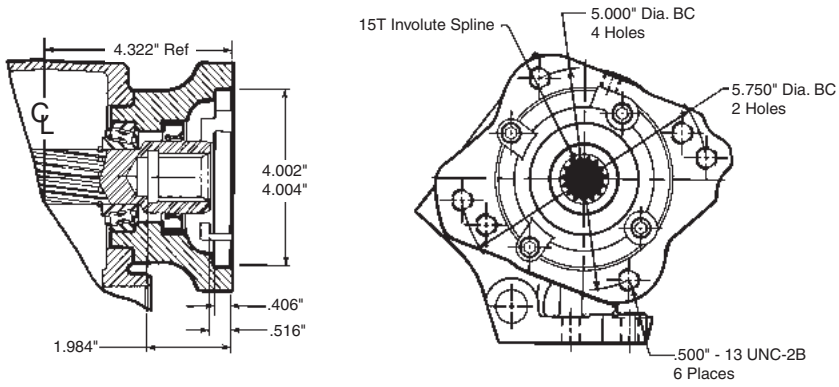

Option Code – AF (Ass’y 3 & 5)
Type – Direct Mount
Flange – SAE “B” 2 or 4-Bolt
Shaft – SAE “BB” (1" - 15T)

PTO Series:
272 282

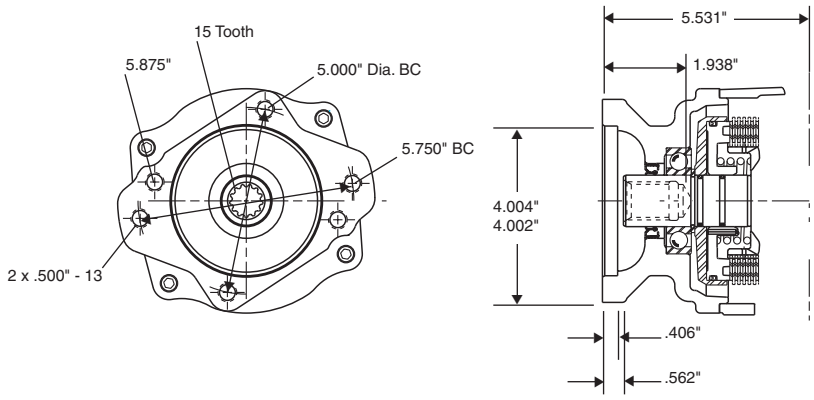

* Recommended Grease: Texaco Coupling Grease, Code 1912 or Equivalent

NOTE: PUMP INSTALLATION PRECAUTIONS
Pump support brackets may be required - see General Safety information section for pump support bracket requirements.
Also remember to pack the female PTO shaft with grease before installing the pump to the PTO.

Parker Hannifin Corporation
Chelsea Products Division
Olive Branch, MS 38654 USA

Option Code – AF

Type – Direct Mount
Flange – SAE “B” 2 or 4-Bolt
Shaft – SAE “BB” (1" - 15T)

PTO Series:
890 897
892 899

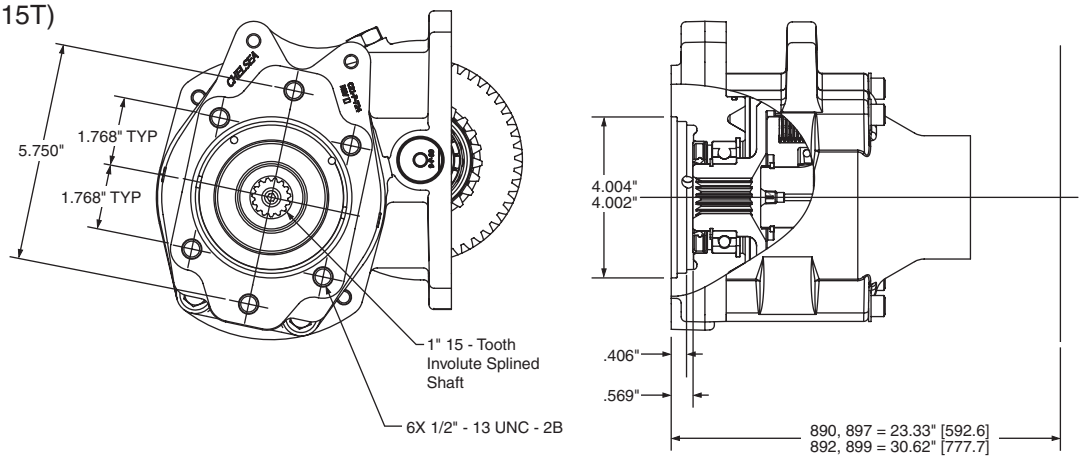

Ass’y “5”

Option Code – AF

Type – Direct Mount
Flange – SAE “B” 2 or 4-Bolt
Shaft – SAE “BB” (1" - 15T)

PTO Series:
CAT-D

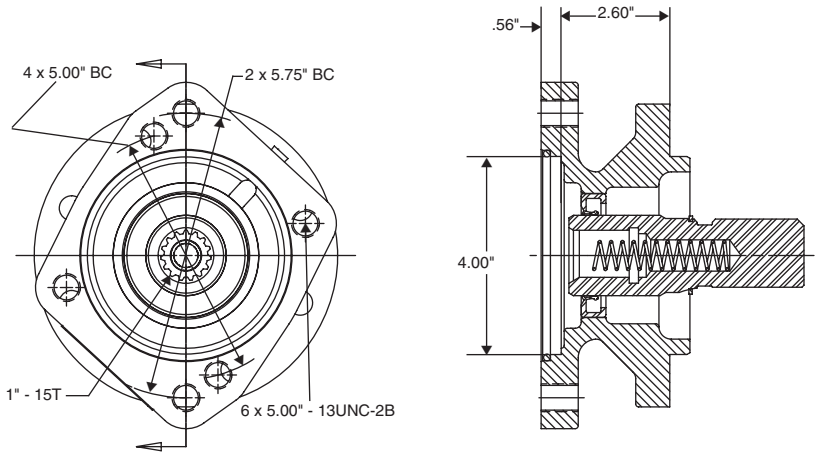

* Recommended Grease: Texaco Coupling Grease, Code 1912 or Equivalent

NOTE: PUMP INSTALLATION PRECAUTIONS
Pump support brackets may be required - see General Safety information section for pump support bracket requirements.
Also remember to pack the female PTO shaft with grease before installing the pump to the PTO.

Parker Hannifin Corporation
Chelsea Products Division
Olive Branch, MS 38654 USA

Option Code – AK

Type – Direct Mount
Flange – SAE “B” 2-Bolt
Shaft – SAE “B” (7/8" - 13T)

PTO Series:

221	447
267	489
290	660
442	680
447	2442

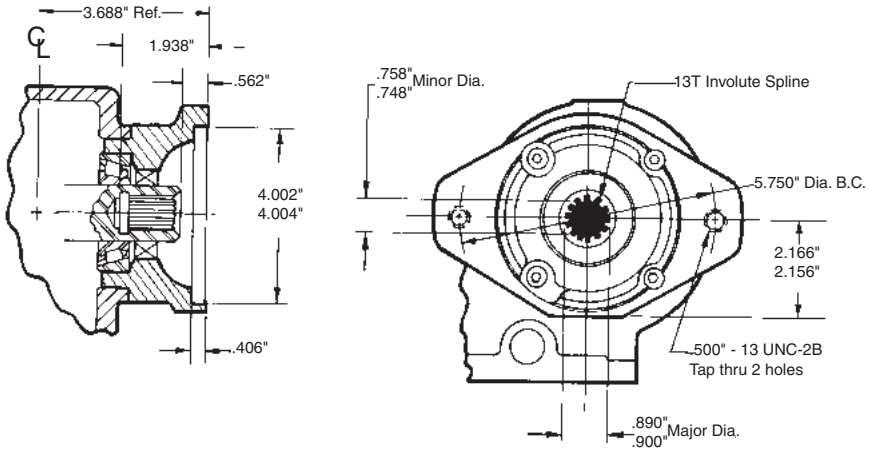

Option Code – AZ

Type – Direct Mount
Flange – Non Standard 4-Bolt
Shaft – SAE “C” (1-1/4" - 14T)

PTO Series:

221	489
267	660
442	680
447	2442

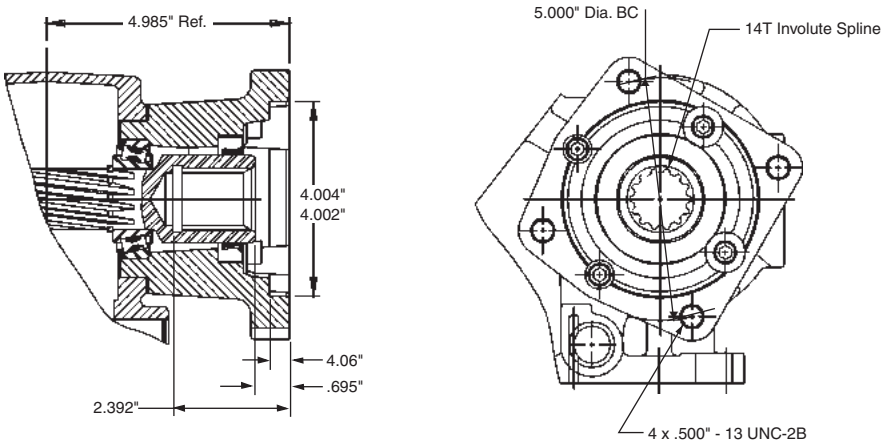

Option Code – AZ

Type – Direct Mount
Flange – SAE “B” 2 & 4-Bolt
Shaft – SAE “C” (1-1/4" - 14T)

PTO Series:
880

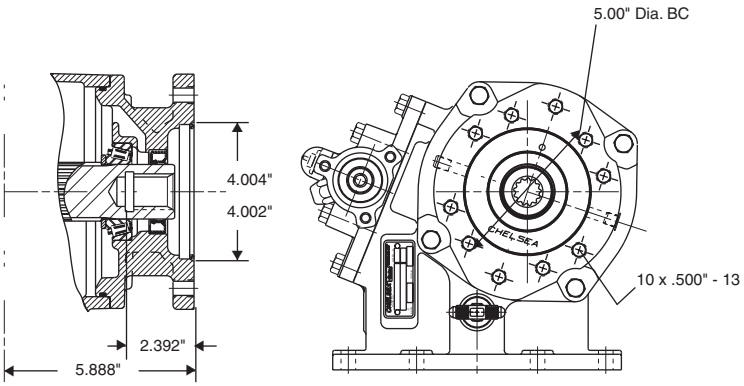

* Recommended Grease: Texaco Coupling Grease, Code 1912 or Equivalent

NOTE: PUMP INSTALLATION PRECAUTIONS
Pump support brackets may be required - see General Safety information section for pump support bracket requirements.
Also remember to pack the female PTO shaft with grease before installing the pump to the PTO.

Parker Hannifin Corporation
Chelsea Products Division
Olive Branch, MS 38654 USA

Option Code – AZ

Type – Direct Mount
Flange – SAE “B” 2 or 4-Bolt
Shaft – SAE “C” (1-1/4" - 14T)

PTO Series:

890 897
892 899

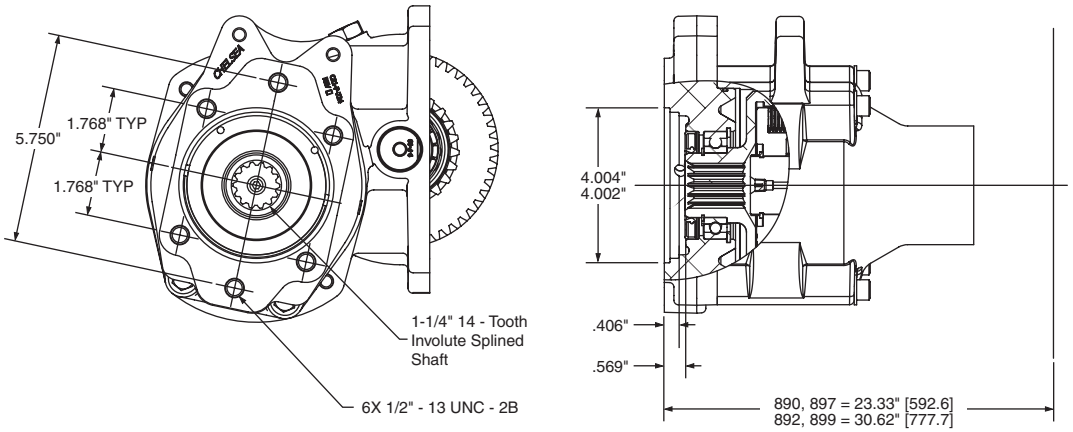

Ass’y “5”

Option Code – BA

Type – Remote Mount
Shaft – 1410 Flange w/ Drag Brake

PTO Series:

272 282

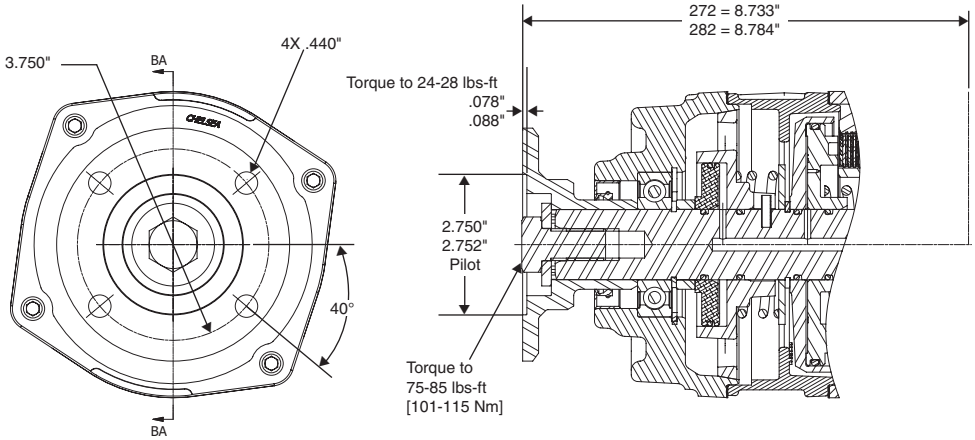

* Recommended Grease: Texaco Coupling Grease, Code 1912 or Equivalent

NOTE: PUMP INSTALLATION PRECAUTIONS
Pump support brackets may be required - see General Safety information section for pump support bracket requirements.
Also remember to pack the female PTO shaft with grease before installing the pump to the PTO.

Parker Hannifin Corporation
Chelsea Products Division
Olive Branch, MS 38654 USA

Option Code – BA
Type – Remote Mount
Shaft – 1410 Flange w/ Drag Brake

PTO Series:
280 287

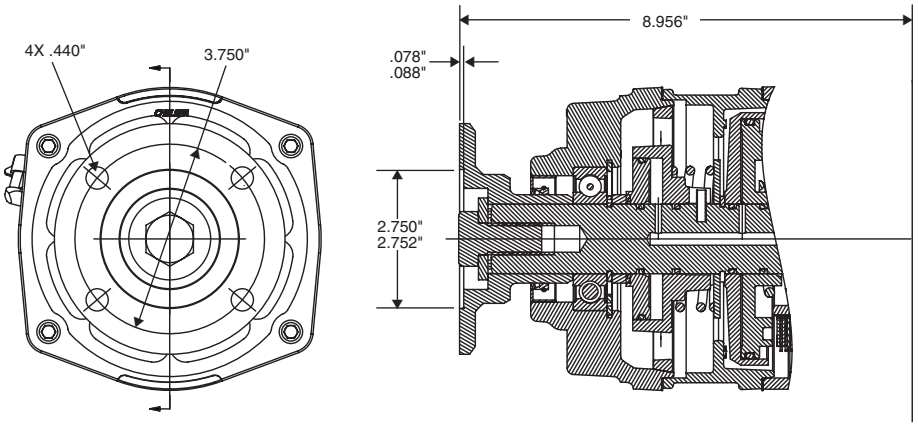

Option Code – BA
Type – Remote Mount
Shaft – 1410 Flange w/ Drag Brake

PTO Series:
870

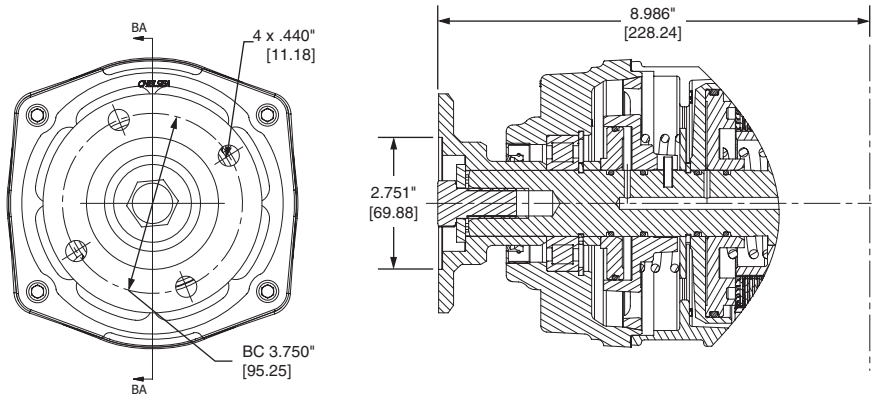

Option Code – BB
Type – Remote Mount
Shaft – DIN 120 Flange w/ Drag Brake

PTO Series:
870

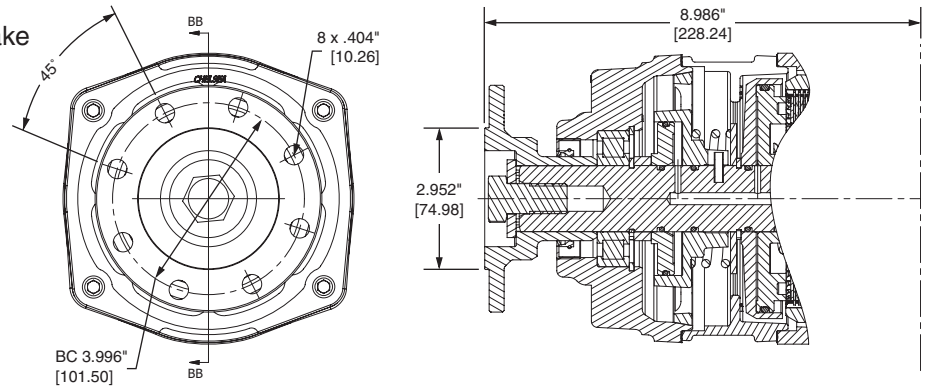

* Recommended Grease: Texaco Coupling Grease, Code 1912 or Equivalent

NOTE: PUMP INSTALLATION PRECAUTIONS
Pump support brackets may be required - see General Safety information section for pump support bracket requirements.
Also remember to pack the female PTO shaft with grease before installing the pump to the PTO.

Parker Hannifin Corporation
Chelsea Products Division
Olive Branch, MS 38654 USA

Option Code – BC

Type – Remote Mount
Shaft – DIN 100 Flange w/ Drag Brake

PTO Series:
870

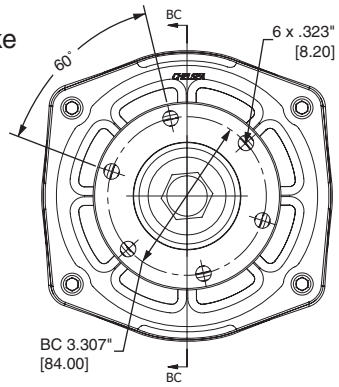

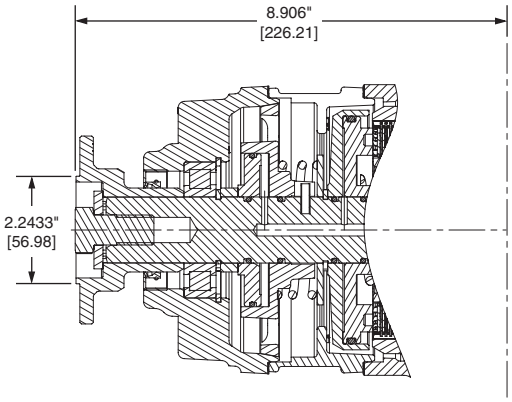

Option Code – BD

Type – Remote Mount
Shaft – 1-1/4" Keyed w/ Drag Brake

PTO Series:
272 282

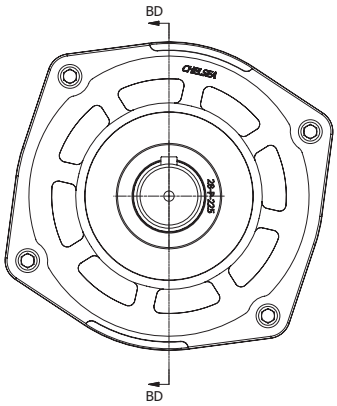

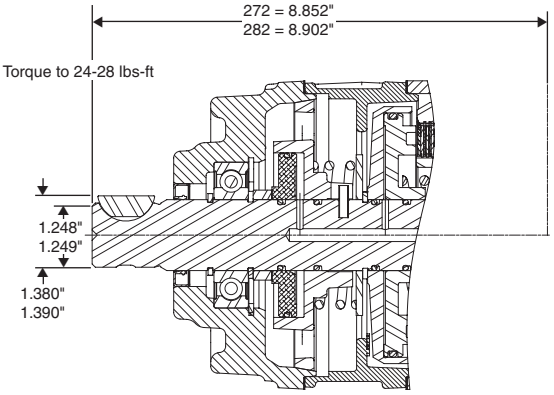

Option Code – BD

Type – Remote Mount
Shaft – 1-1/4" Rd. Keyed w/ Shaft Brake

PTO Series:
280 287

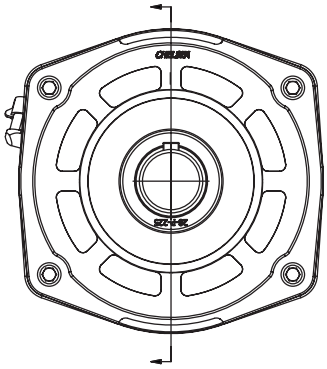

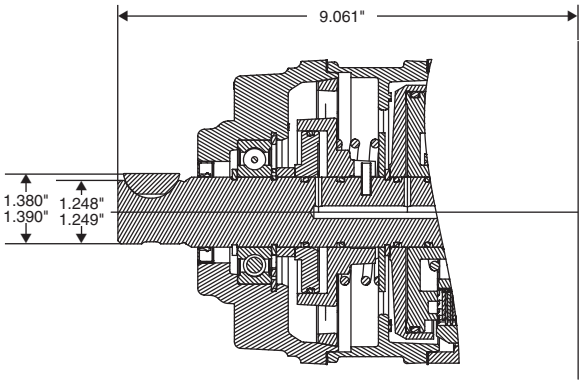

* Recommended Grease: Texaco Coupling Grease, Code 1912 or Equivalent

NOTE: PUMP INSTALLATION PRECAUTIONS
Pump support brackets may be required - see General Safety information section for pump support bracket requirements.
Also remember to pack the female PTO shaft with grease before installing the pump to the PTO.

Parker Hannifin Corporation
Chelsea Products Division
Olive Branch, MS 38654 USA

Option Code – CF

Type – Direct Mount
Flange – SAE “B” 2 or 4-Bolt
Shaft – SAE “BB” (1" - 15T)

PTO Series:
590

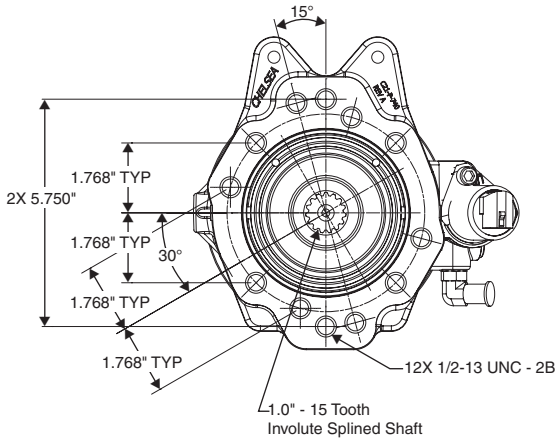

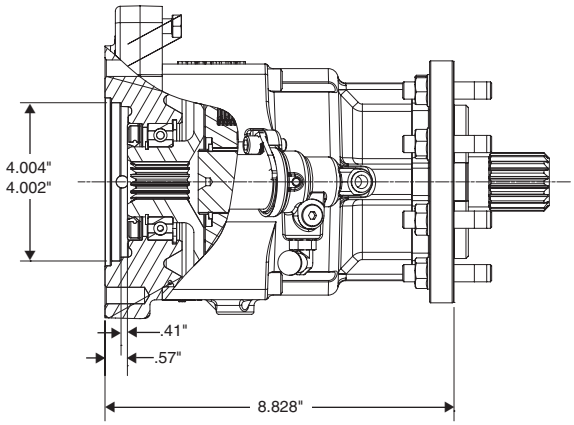

Option Code – CF

Type – Direct Mount
Flange – SAE “B” 2 or 4-Bolt
Shaft – SAE “BB” (1" - 15T)

PTO Series:
890 897
892 899

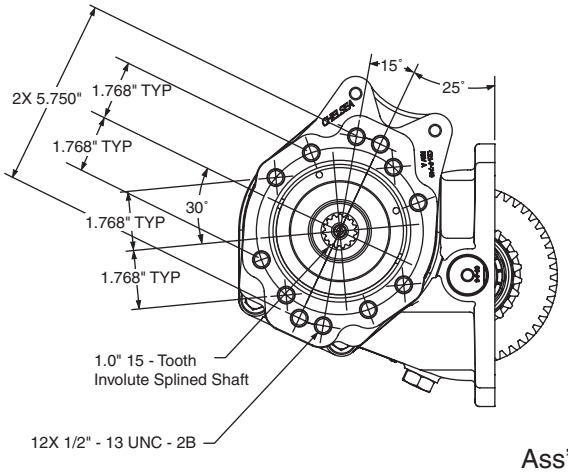

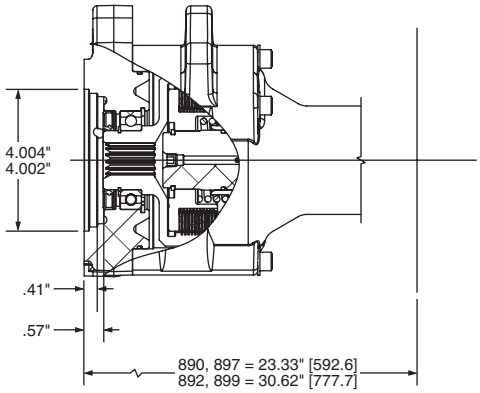

Ass’y “3”

* Recommended Grease: Texaco Coupling Grease, Code 1912 or Equivalent

NOTE: PUMP INSTALLATION PRECAUTIONS
Pump support brackets may be required - see General Safety information section for pump support bracket requirements.
Also remember to pack the female PTO shaft with grease before installing the pump to the PTO.

Parker Hannifin Corporation
Chelsea Products Division
Olive Branch, MS 38654 USA

Option Code – CK
Type – Direct Mount
Flange – SAE “B” 2 or 4-Bolt
Shaft – SAE “B” (7/8" - 13T)

PTO Series:
590

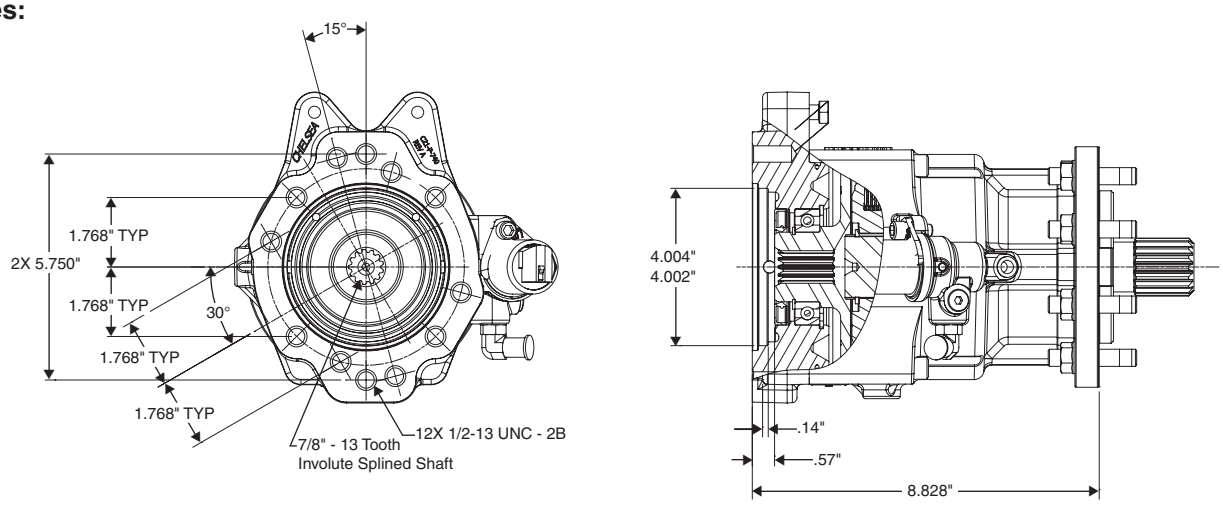

Option Code – CK
Type – Direct Mount
Flange – SAE “B” 2 or 4-Bolt
Shaft – SAE “B” (7/8" - 13T)

PTO Series:
890 897
892 899

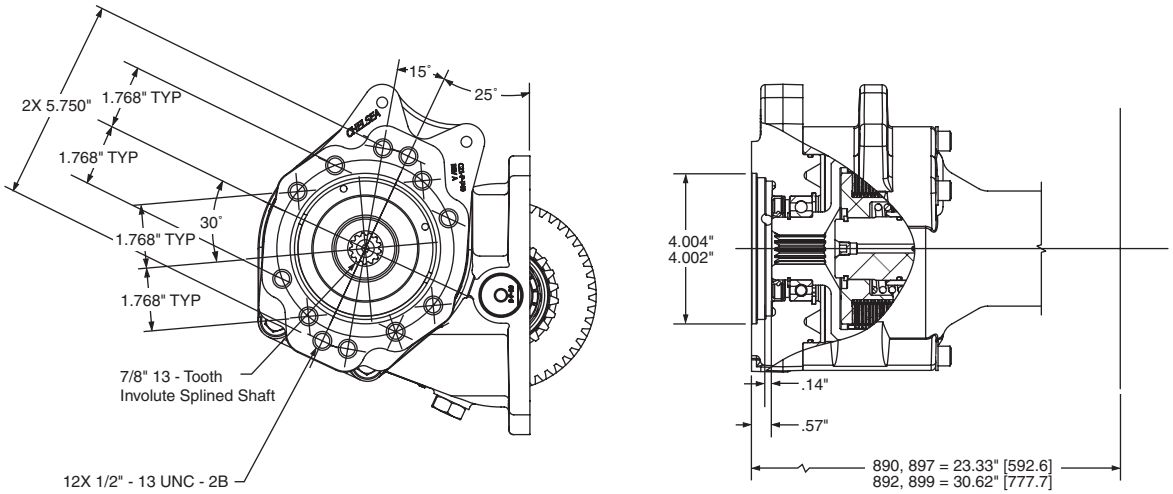

Ass’y “3”

* Recommended Grease: Texaco Coupling Grease, Code 1912 or Equivalent

NOTE: PUMP INSTALLATION PRECAUTIONS
Pump support brackets may be required - see General Safety information section for pump support bracket requirements.
Also remember to pack the female PTO shaft with grease before installing the pump to the PTO.

Option Code – CS

Type – Direct Mount
Flange – SAE “C” 4-Bolt
Shaft – SAE “C” (1-1/4" - 14T)

PTO Series:
590

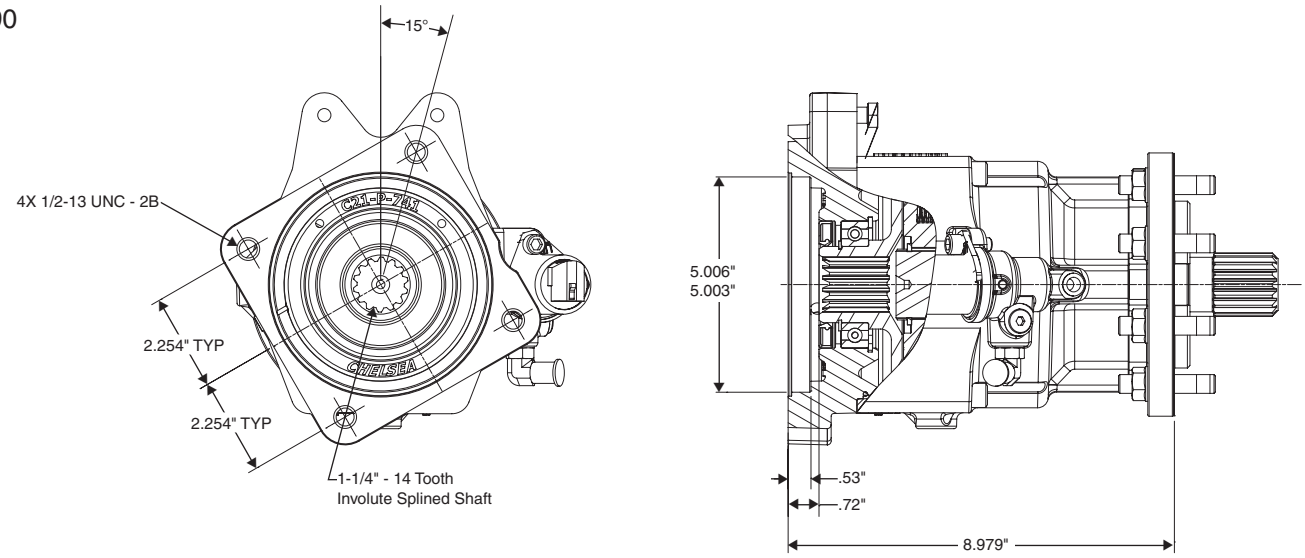

Option Code – CS

Type – Direct Mount
Flange – SAE “C” 4-Bolt
Shaft – SAE “C” (1-1/4" - 14T)

PTO Series:
890 897
892 899

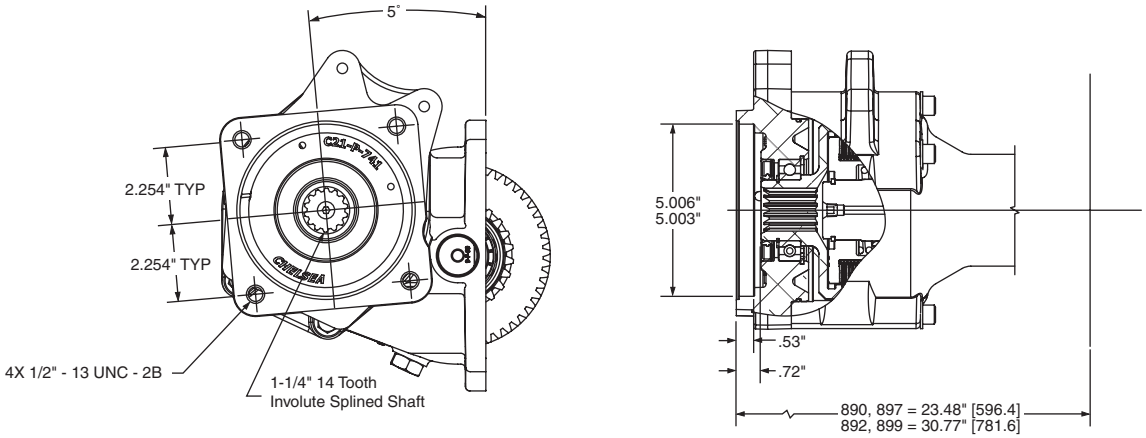

Ass’y “3”

* Recommended Grease: Texaco Coupling Grease, Code 1912 or Equivalent

NOTE: PUMP INSTALLATION PRECAUTIONS
Pump support brackets may be required - see General Safety information section for pump support bracket requirements.
Also remember to pack the female PTO shaft with grease before installing the pump to the PTO.

Parker Hannifin Corporation
Chelsea Products Division
Olive Branch, MS 38654 USA

Option Code – CZ

Type – Direct Mount
Flange – SAE “B” 2 or 4-Bolt
Shaft – SAE “C” (1-1/4" - 14T)

PTO Series:
590

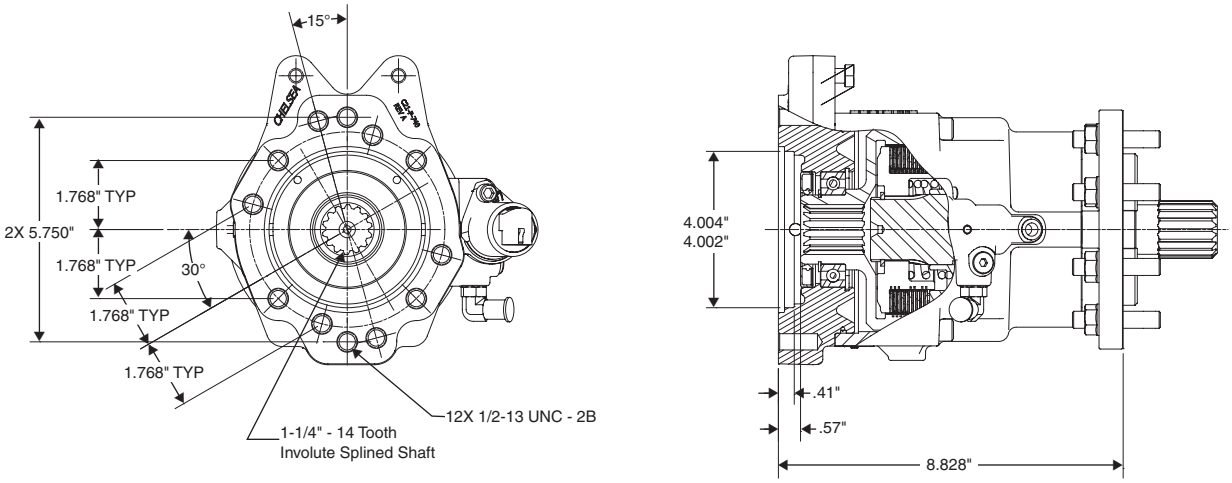

Option Code – CZ

Type – Direct Mount
Flange – SAE “B” 2 or 4-Bolt
Shaft – SAE “C” (1-1/4" - 14T)

PTO Series:
890 897
892 899

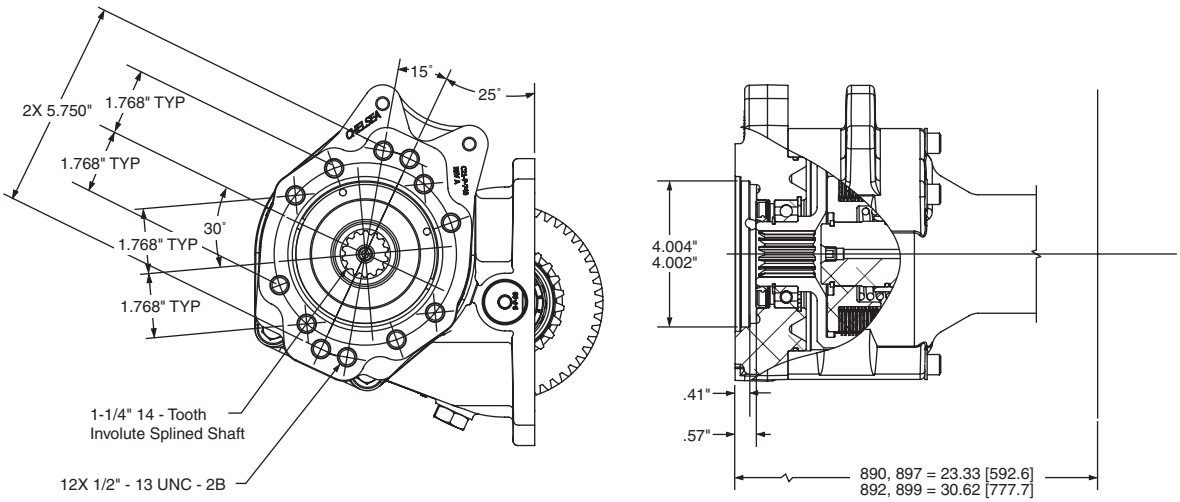

Ass’y “3”

* Recommended Grease: Texaco Coupling Grease, Code 1912 or Equivalent

NOTE: PUMP INSTALLATION PRECAUTIONS
Pump support brackets may be required - see General Safety information section for pump support bracket requirements.
Also remember to pack the female PTO shaft with grease before installing the pump to the PTO.

Option Code – DA

Type – Direct Mount
Flange – SAE “D” 4-Bolt
Shaft – SAE “D” (1-3/4" - 13T)

PTO Series:

890	897
892	899

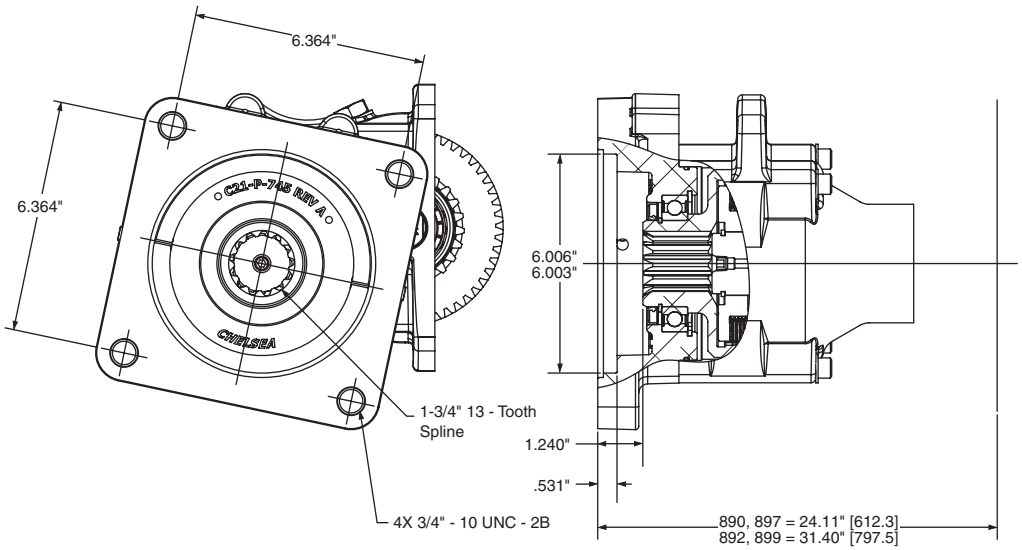

Ass’y “5”

Option Code – GA

Type – Direct Mount
Flange – Rotatable SAE “B” 2-Bolt
Shaft – SAE “B” (7/8" - 13T)
(*Greaseable)

PTO Series:

221	489
267	660
442	680
447	2442

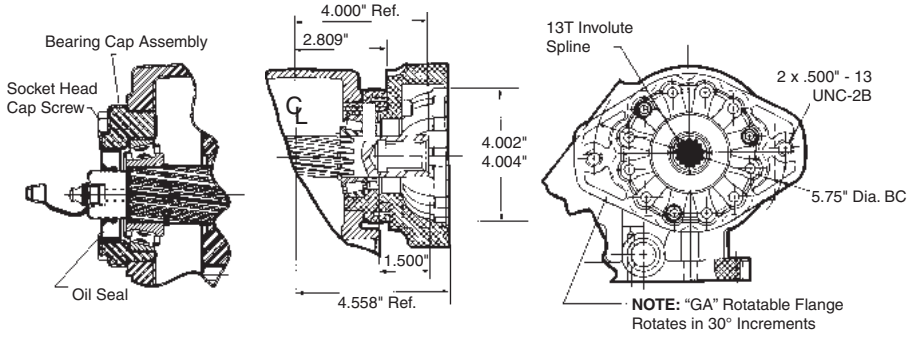

* Recommended Grease: Texaco Coupling Grease, Code 1912 or Equivalent

NOTE: PUMP INSTALLATION PRECAUTIONS
Pump support brackets may be required - see General Safety information section for pump support bracket requirements.
Also remember to pack the female PTO shaft with grease before installing the pump to the PTO.

Parker Hannifin Corporation
Chelsea Products Division
Olive Branch, MS 38654 USA

Option Code – GB

Type – Direct Mount
Flange – Rotatable SAE "B" 4-Bolt
Shaft – SAE "B" (7/8" - 13T)
(*Greaseable)

PTO Series:

221	489
267	660
442	680
447	2442

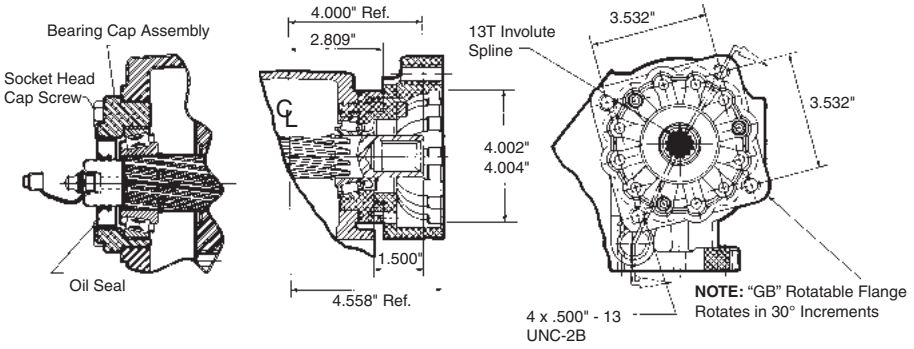

Option Code – GF

Type – Direct Mount
Flange – SAE "B" 2 or 4-Bolt
Shaft – SAE "BB" (1" - 15T)
(*Greaseable)

PTO Series:

221	489
267	660
442	680
447	2442

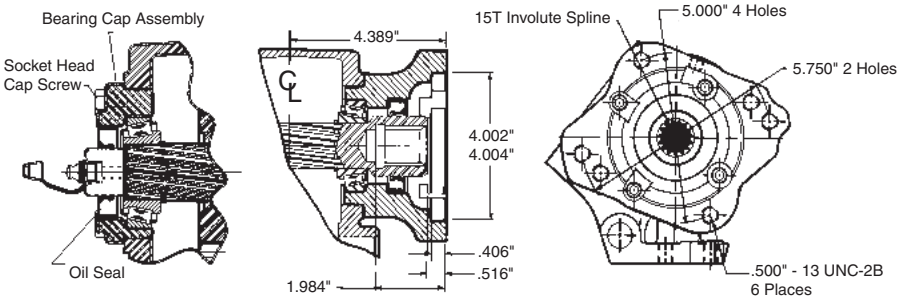

Option Code – GH

Type – Direct Mount
Flange – SAE "B" 2-Bolt Rotatable
Shaft – SAE "BB" (1" - 15T)
(*Greaseable)

PTO Series:

221	489
267	660
442	680
447	2442

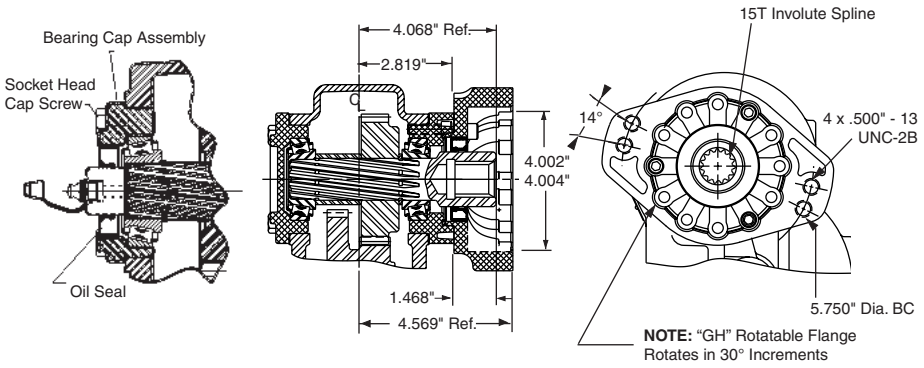

* Recommended Grease: Texaco Coupling Grease, Code 1912 or Equivalent

NOTE: PUMP INSTALLATION PRECAUTIONS
Pump support brackets may be required - see General Safety information section for pump support bracket requirements.
Also remember to pack the female PTO shaft with grease before installing the pump to the PTO.

Parker Hannifin Corporation
Chelsea Products Division
Olive Branch, MS 38654 USA

Option Code – GK

Type – Direct Mount
Flange – SAE “B” 2 or 4-Bolt
Shaft – SAE “B” (7/8" - 13T)
(*Greaseable)

PTO Series:

221	489
267	660
442	680
447	2442

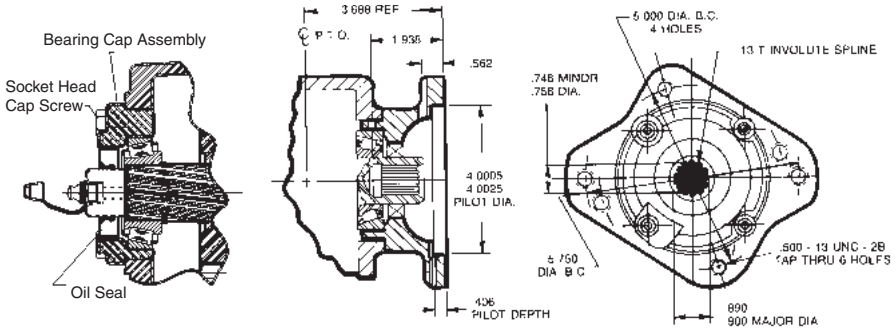

Option Code – GQ

Type – Direct Mount
Flange – SAE “B” 2 or 4-Bolt
Shaft – SAE “B” (7/8" - 13T)
(*Greaseable)

PTO Series:

221	489
267	660
442	680
447	2442

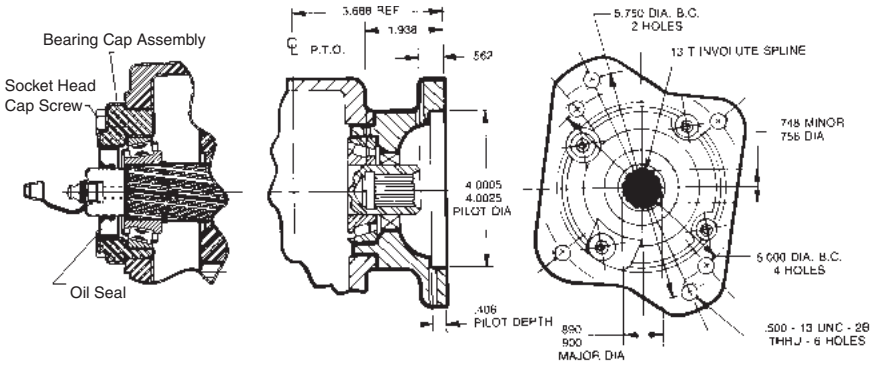

Option Code – GR

Type – Direct Mount
Flange – Chelsea Special (Cloverleaf)
Shaft – SAE “B” (7/8" - 13T)
(*Greaseable)

PTO Series:

221	489
267	660
442	680
447	2442

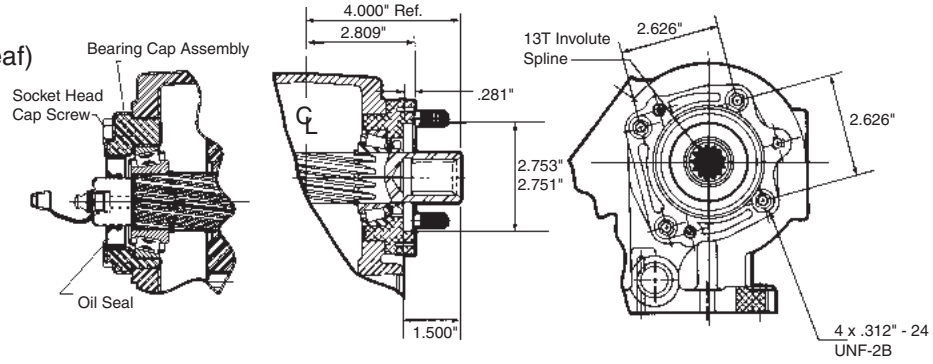

* Recommended Grease: Texaco Coupling Grease, Code 1912 or Equivalent

NOTE: PUMP INSTALLATION PRECAUTIONS
Pump support brackets may be required - see General Safety information section for pump support bracket requirements.
Also remember to pack the female PTO shaft with grease before installing the pump to the PTO.

Parker Hannifin Corporation
Chelsea Products Division
Olive Branch, MS 38654 USA

Option Code – GS

Type – Direct Mount
Flange – SAE “C” 2 or 4-Bolt
Shaft – SAE “C” (1-1/4" - 14T)
(*Greaseable)

PTO Series:
823

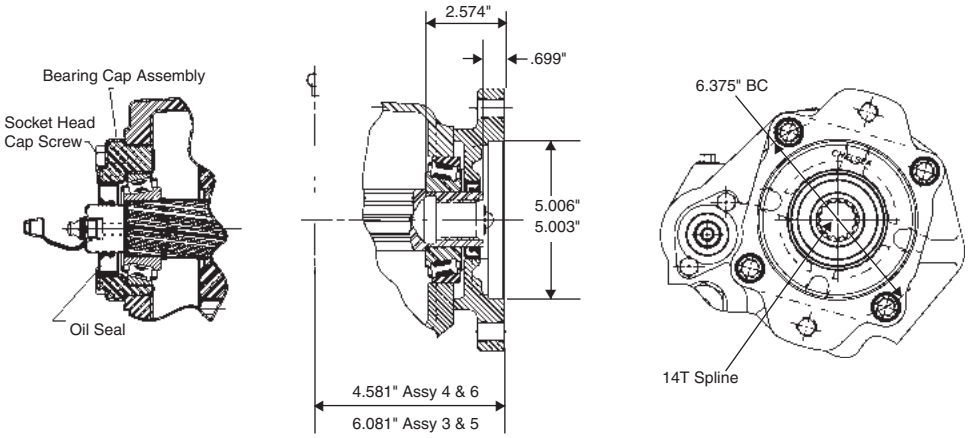

Option Code – GS

Type – Direct Mount
Flange – SAE “C” 2 or 4-Bolt
Shaft – SAE “C” (1-1/4" - 14T)
(*Greaseable)

PTO Series:
880

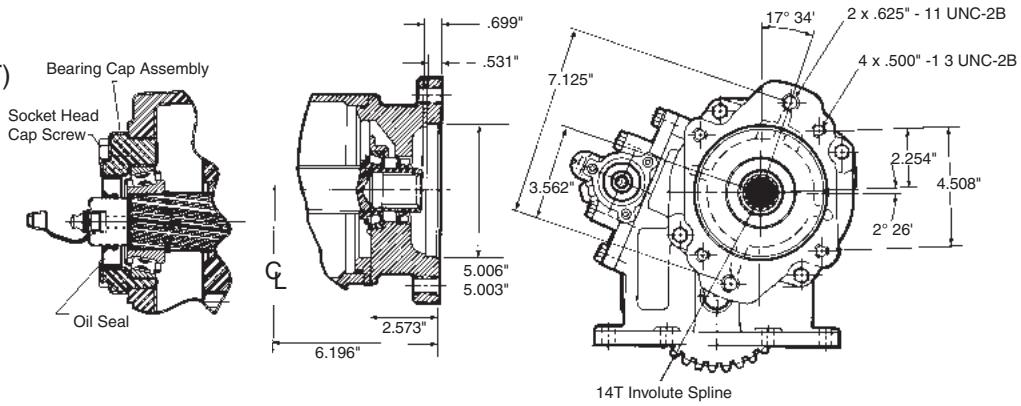

Option Code – GY

Type – Direct Mount
Flange – ISO 7653 Pump Mounting
Shaft – DIN 5462 (B8x32x36-8T)
(*Greaseable)

PTO Series:

221	489
267	660
442	680
447	2442

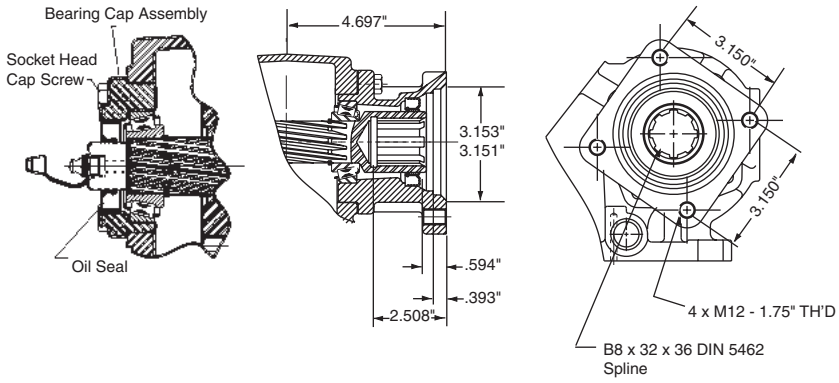

* Recommended Grease: Texaco Coupling Grease, Code 1912 or Equivalent

NOTE: PUMP INSTALLATION PRECAUTIONS
Pump support brackets may be required - see General Safety information section for pump support bracket requirements.
Also remember to pack the female PTO shaft with grease before installing the pump to the PTO.

Parker Hannifin Corporation
Chelsea Products Division
Olive Branch, MS 38654 USA

Option Code – GZ

Type – Direct Mount
Flange – Non Standard 4-Bolt
Shaft – SAE “C” (1-1/4" - 14T)
(*Greaseable)

PTO Series:

221	489
267	660
290	680
442	2442
447	

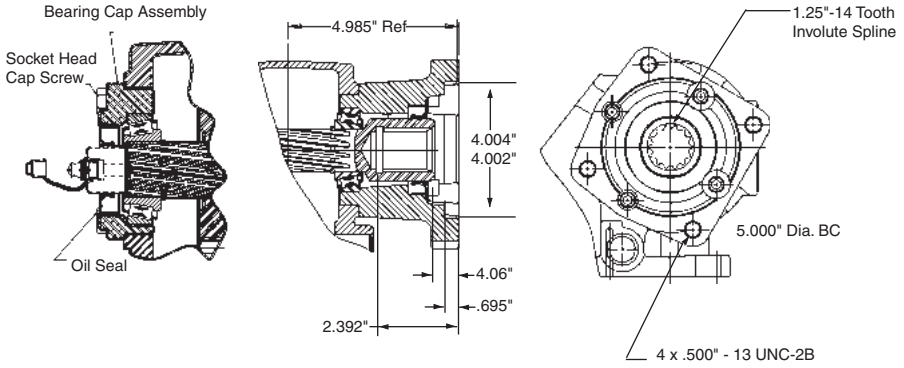

Option Code – RA

Type – Direct Mount
Flange – Rotatable SAE “B” 2-Bolt
Shaft – SAE “B” (7/8" - 13T)

PTO Series:

221	489
267	660
290	680
442	2442
447	

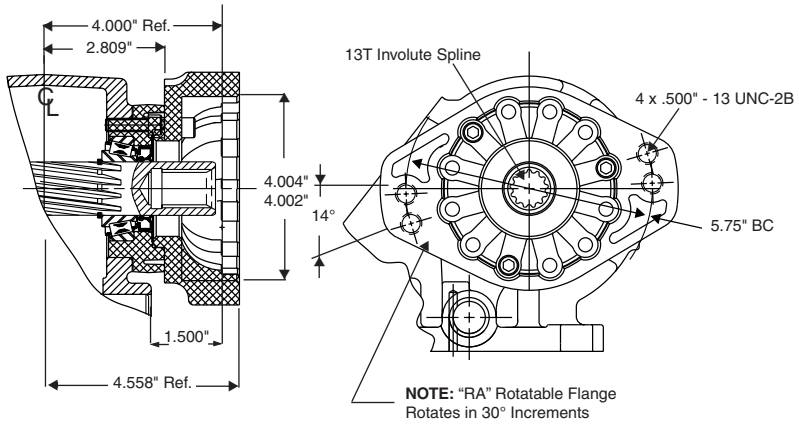

Option Code – RB

Type – Direct Mount
Flange – Rotatable SAE “B” 2-Bolt
Shaft – SAE “B” (7/8" - 13T)

PTO Series:

221	489
267	660
290	680
442	2442

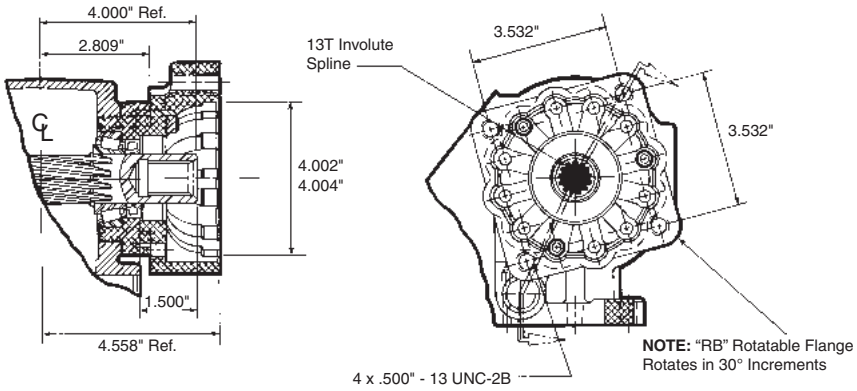

* Recommended Grease: Texaco Coupling Grease, Code 1912 or Equivalent

NOTE: PUMP INSTALLATION PRECAUTIONS
Pump support brackets may be required - see General Safety information section for pump support bracket requirements.
Also remember to pack the female PTO shaft with grease before installing the pump to the PTO.

Parker Hannifin Corporation
Chelsea Products Division
Olive Branch, MS 38654 USA

Option Code – RC

Type – Direct Mount
Flange – Rotatable SAE "A" 2-Bolt
Shaft – SAE "A" (5/8" - 9T)

PTO Series:

221	489
267	660
290	680
442	2442
447	

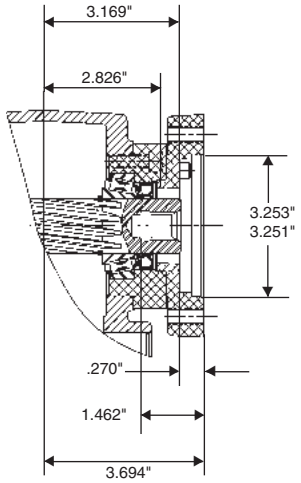

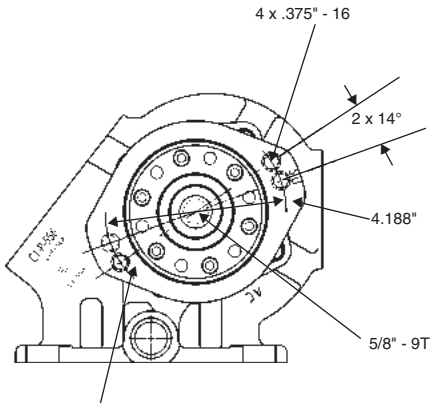

NOTE: "RC" Rotatable Flange Rotates in 30° Increments

Option Code – RD

Type – Direct Mount
Flange – Rotatable SAE "A" 2-Bolt
Shaft – SAE "B" (7/8" - 13T)

PTO Series:

442	489
2442	

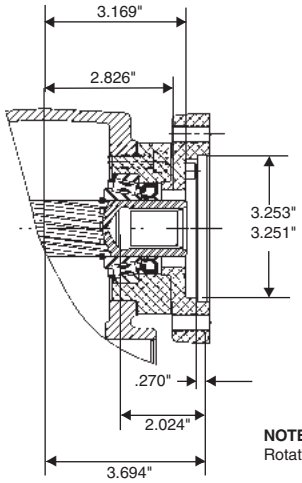

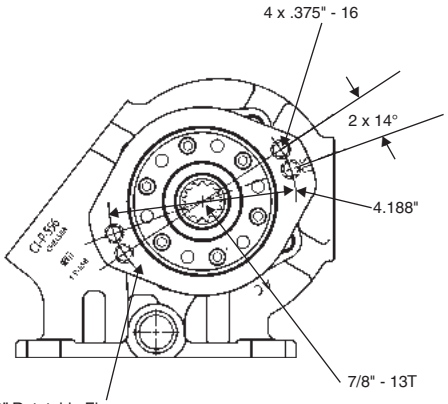

NOTE: "RD" Rotatable Flange Rotates in 30° Increments

Option Code – RE

Type – Direct Mount
Flange – Rotatable SAE "B" 4-Bolt
Shaft – SAE "BB" (1" - 15T)

PTO Series:

290	489
429	660
442	680
447	2442

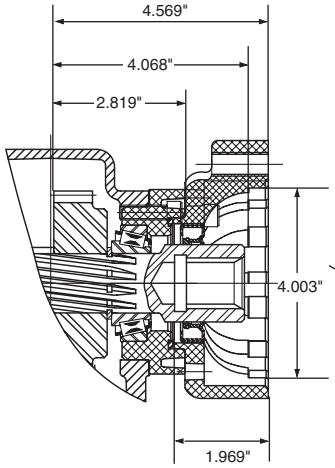

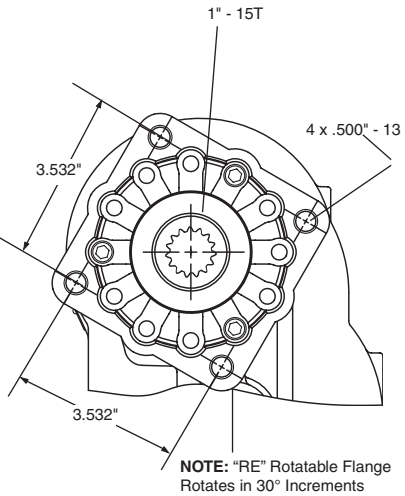

NOTE: "RE" Rotatable Flange Rotates in 30° Increments

* Recommended Grease: Texaco Coupling Grease, Code 1912 or Equivalent

NOTE: PUMP INSTALLATION PRECAUTIONS
Pump support brackets may be required - see General Safety information section for pump support bracket requirements.
Also remember to pack the female PTO shaft with grease before installing the pump to the PTO.

Parker Hannifin Corporation
Chelsea Products Division
Olive Branch, MS 38654 USA

Option Code – RF

Type – Direct Mount
Flange – Rotatable SAE “B” 2-Bolt
Shaft – SAE “BB” (1" - 15T)

PTO Series:

221	489
267	660
290	680
442	2442
447	

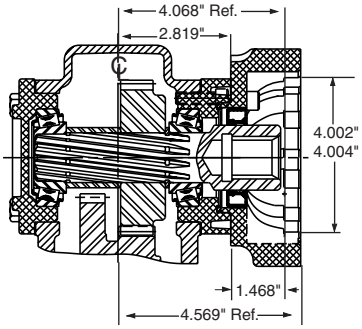

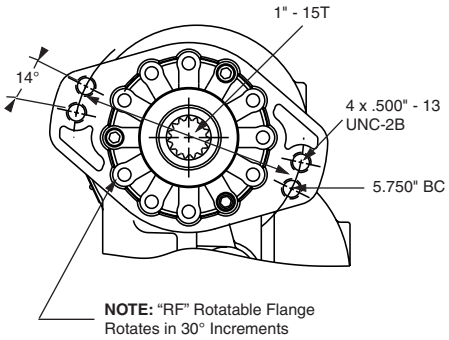

Option Code – RF

Type – Direct Mount
Flange – Rotatable SAE “B” Pilot 2 or 4-Bolt
Shaft – SAE “BB” Shaft (1" - 15T)
Rotates in 30° Increments

PTO Series:

272	282

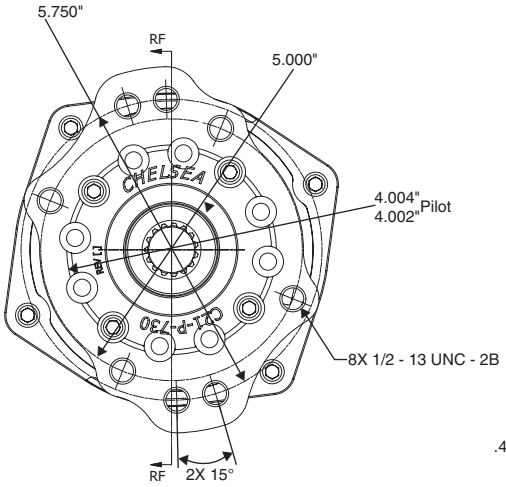

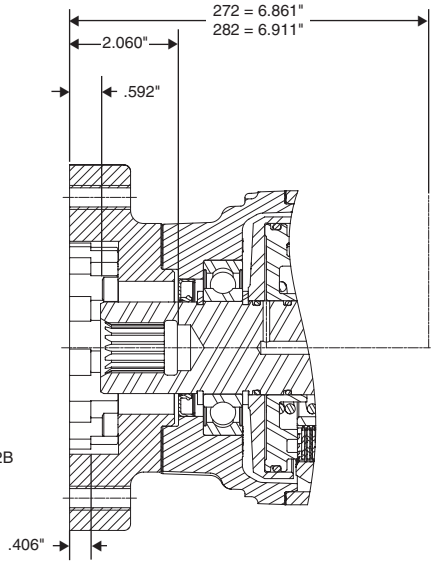

Option Code – RF

Type – Direct Mount
Flange – Rotatable SAE “B” 2 or 4-Bolt
Shaft – SAE “BB” (1" - 15T)

PTO Series:

280	287

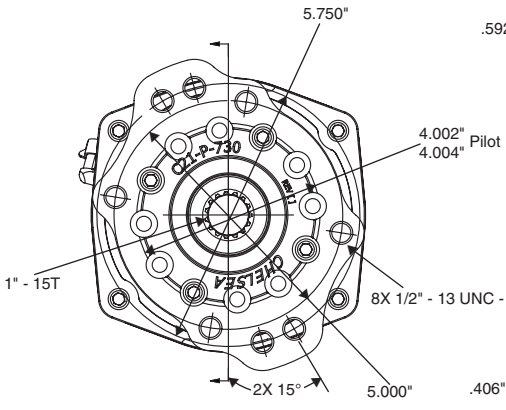

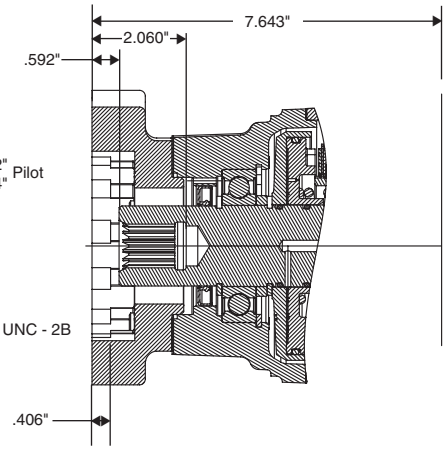

* Recommended Grease: Texaco Coupling Grease, Code 1912 or Equivalent

NOTE: PUMP INSTALLATION PRECAUTIONS
Pump support brackets may be required - see General Safety information section for pump support bracket requirements.
Also remember to pack the female PTO shaft with grease before installing the pump to the PTO.

Option Code – RK

Type – Direct Mount
Flange – Rotatable SAE “B” Pilot 2 or 4-Bolt
Shaft – SAE “B” Shaft (7/8" - 13T)
Rotates in 30° Increments

PTO Series:
272 282

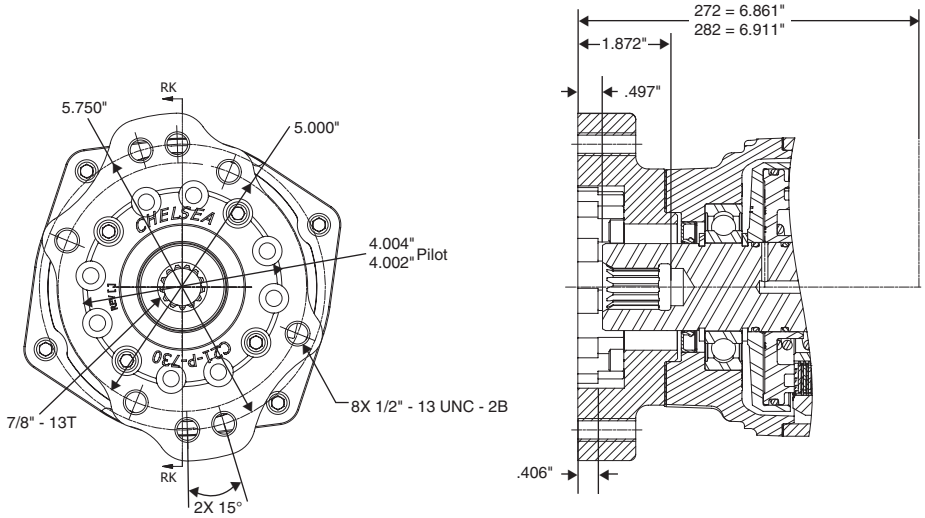

Option Code – RK

Type – Direct Mount
Flange – Rotatable SAE “B” 2 & 4-Bolt
Shaft – SAE “B” (7/8" - 13T)
Rotates in 30° Increments

PTO Series:
280 287

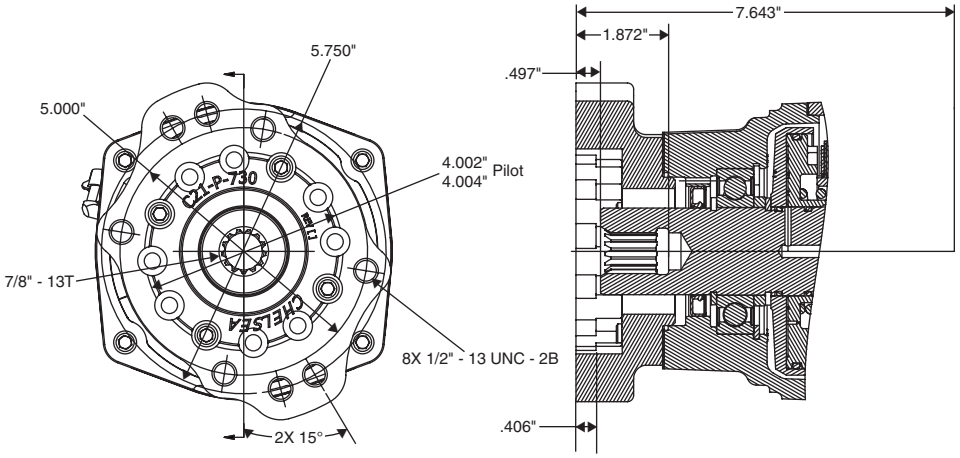

* Recommended Grease: Texaco Coupling Grease, Code 1912 or Equivalent

NOTE: PUMP INSTALLATION PRECAUTIONS
Pump support brackets may be required - see General Safety information section for pump support bracket requirements.
Also remember to pack the female PTO shaft with grease before installing the pump to the PTO.

Option Code – RS

Type – Direct Mount
Flange – SAE “C” 2 or 4-Bolt
Shaft – Rotatable SAE “C” Shaft (1-1/4" - 14T)
Rotates in 30° Increment

PTO Series:
272 282

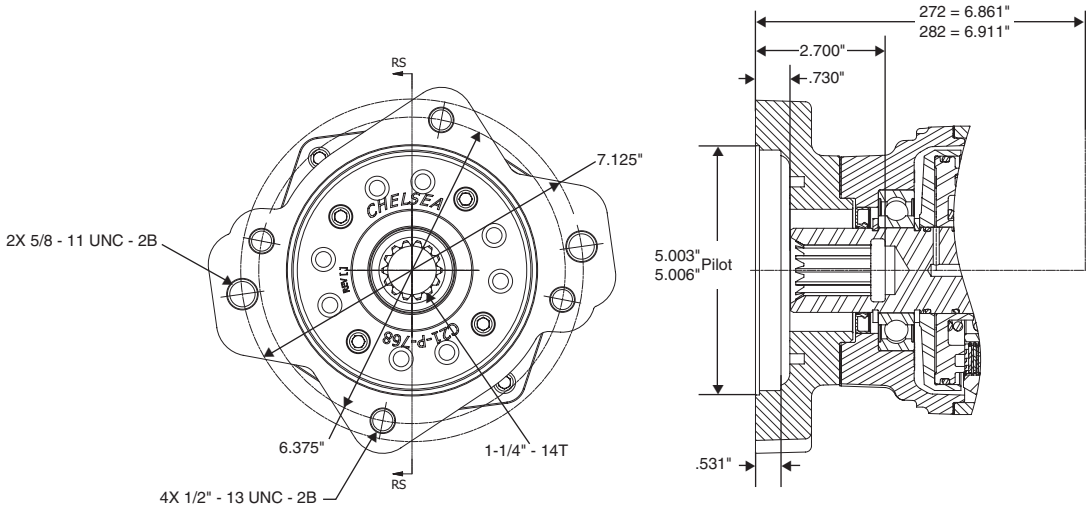

Option Code – RS

Type – Direct Mount
Flange – Rotatable SAE “C” 2 & 4-Bolt
Shaft – SAE “C” (1-1/4" - 14T)
Rotates in 30° Increments

PTO Series:
280 287

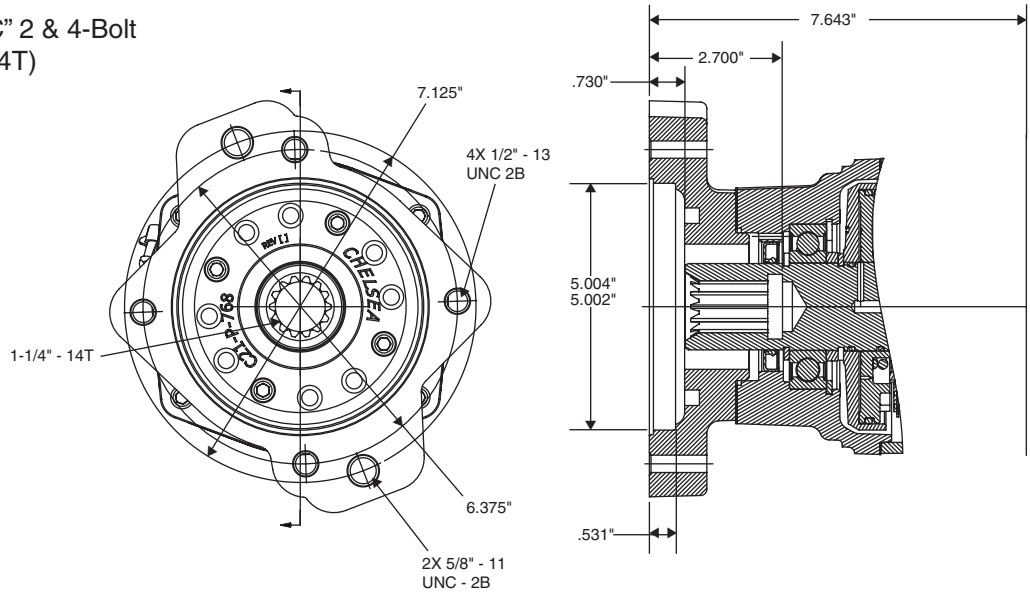

* Recommended Grease: Texaco Coupling Grease, Code 1912 or Equivalent

NOTE: PUMP INSTALLATION PRECAUTIONS
Pump support brackets may be required - see General Safety information section for pump support bracket requirements.
Also remember to pack the female PTO shaft with grease before installing the pump to the PTO.

Parker Hannifin Corporation
Chelsea Products Division
Olive Branch, MS 38654 USA

Option Code – RS

Type – Direct Mount
Flange – Rotatable SAE “C” 2 or 4-Bolt
Shaft – SAE “C” (1-1/4" - 14T)
Rotates in 30° Increments

PTO Series:
870 877

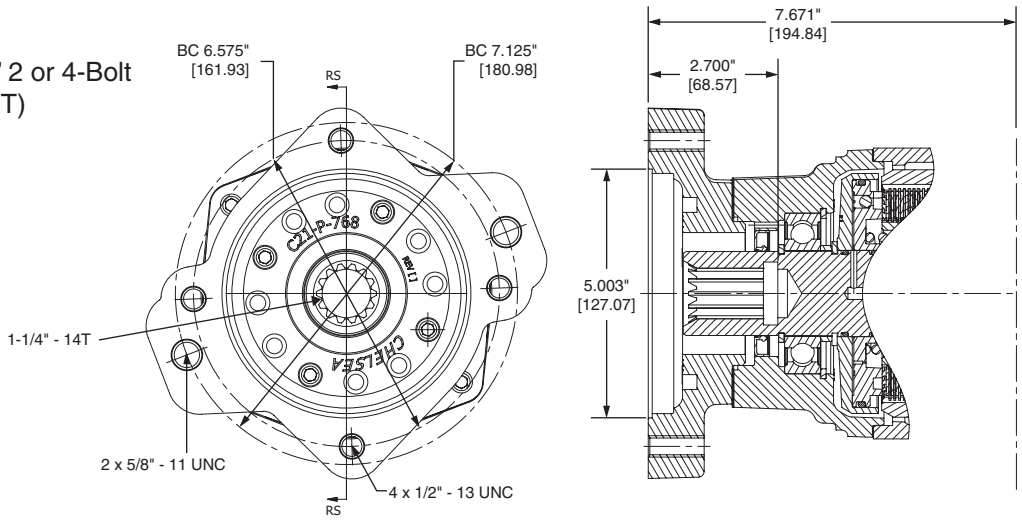

Option Code – RY

Type – Direct Mount
Flange – Rotatable ISO 7653 Pump Mounting
Shaft – DIN 5462 (B8x32x36-8T)
Rotates in 120° Increments

PTO Series:
221 489
267 660
290 680
442 2442
447

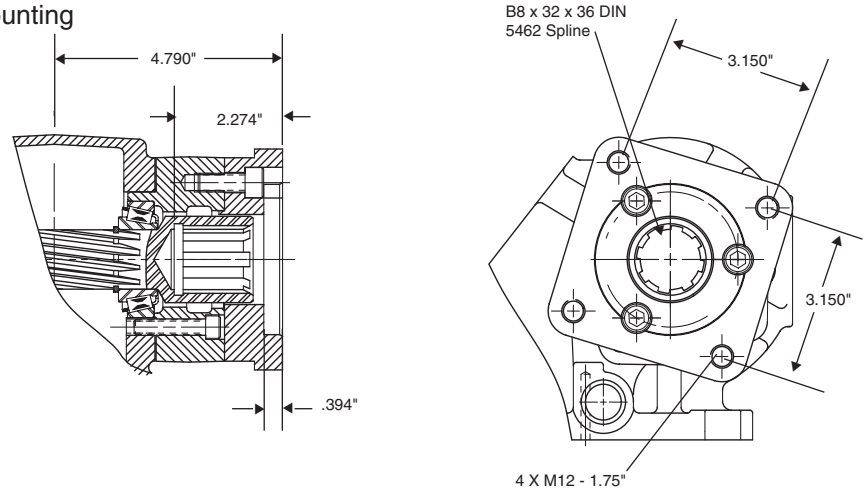

Option Code – RY

Type – Direct Mount
Flange – Rotatable ISO 7653 Pump Mounting
Shaft – DIN 5462 (B8x32x36-8T)
Rotates in 30° Increments

Available for the following PTOs:
272 282

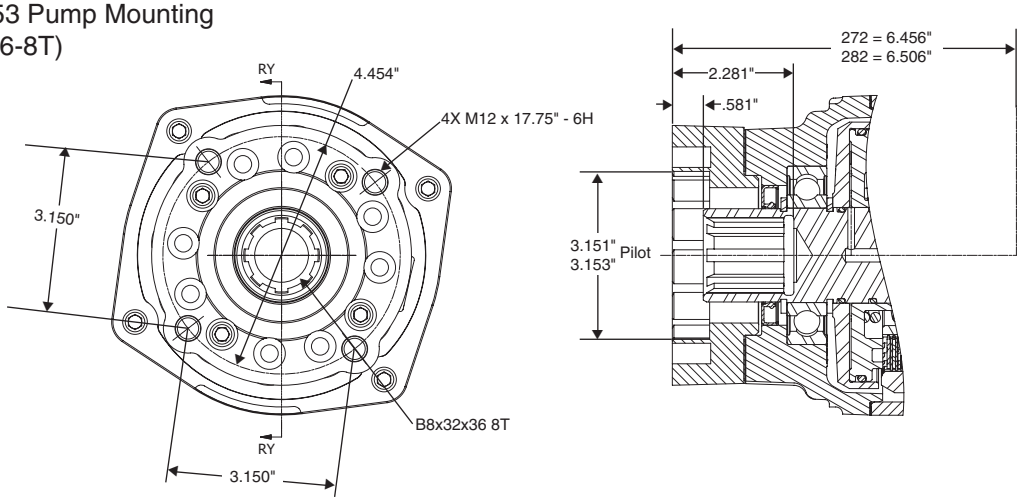

* Recommended Grease: Texaco Coupling Grease, Code 1912 or Equivalent

NOTE: PUMP INSTALLATION PRECAUTIONS
Pump support brackets may be required - see General Safety information section for pump support bracket requirements.
Also remember to pack the female PTO shaft with grease before installing the pump to the PTO.

Parker Hannifin Corporation
Chelsea Products Division
Olive Branch, MS 38654 USA

Option Code – RY

Type – Direct Mount
Flange – Rotatable ISO 7653 Pump Mounting
Shaft – DIN 5462 (B8x32x36-8T)
Rotates in 30° Increments

PTO Series:
280 287

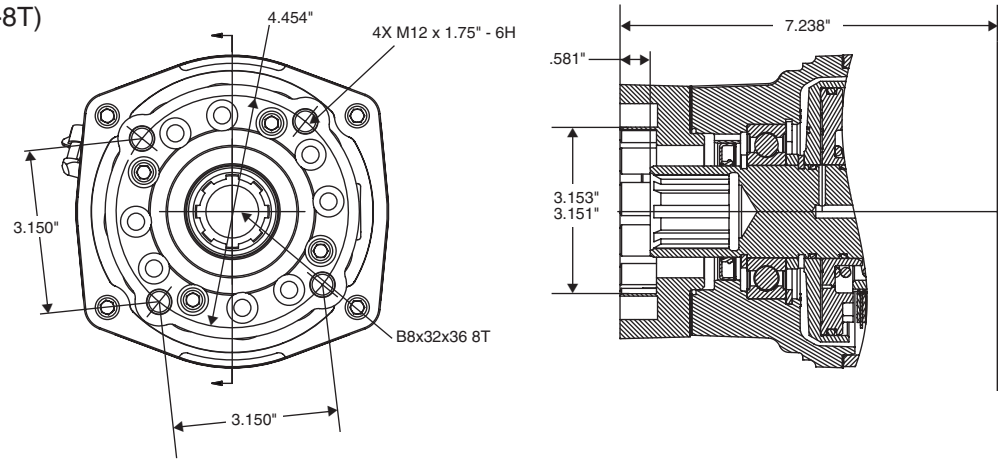

Option Code – RY

Type – Direct Mount
Flange – Rotatable ISO 7653 Pump Mounting
Shaft – DIN 5462 (B8x32x36-8T)

PTO Series:
870 877

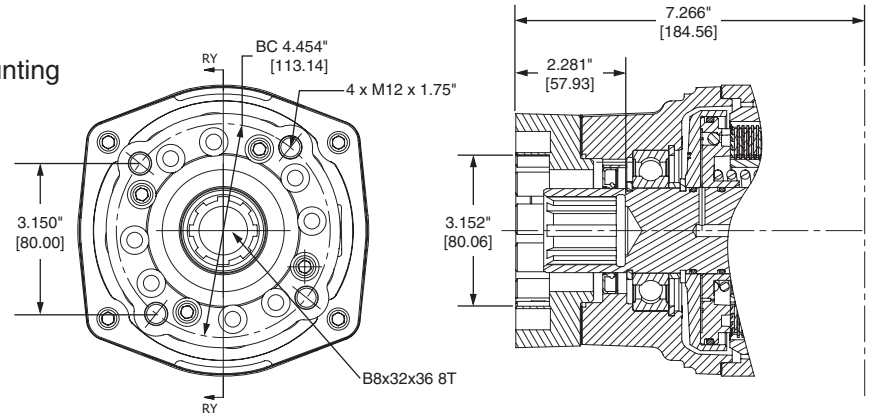

Option Code – RZ

Type – Direct Mount
Flange – Rotatable SAE "B" 2 or 4-Bolt Flange
Shaft – SAE "C" Shaft (1-1/4" 14T)
Rotates in 30° Increments

PTO Series:
272 282

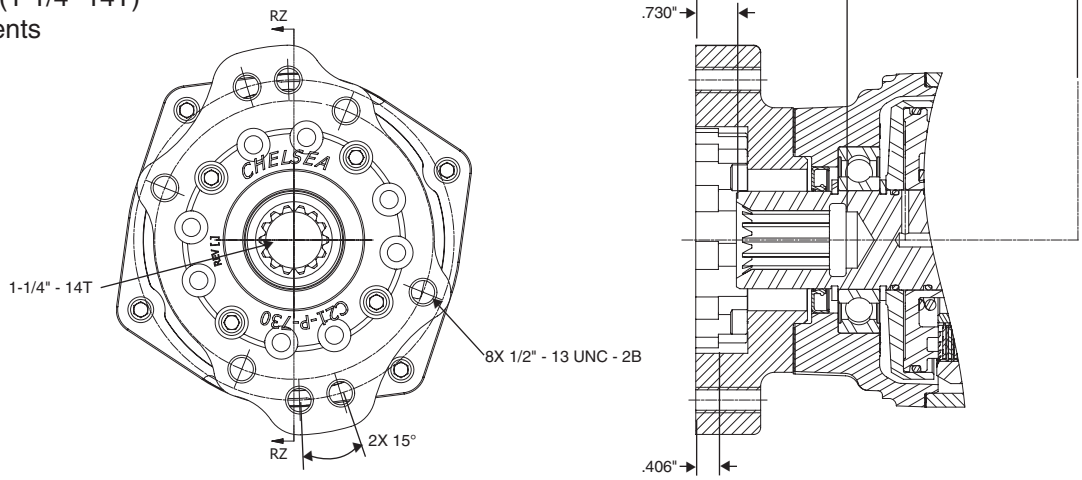

* Recommended Grease: Texaco Coupling Grease, Code 1912 or Equivalent

NOTE: PUMP INSTALLATION PRECAUTIONS
Pump support brackets may be required - see General Safety information section for pump support bracket requirements.
Also remember to pack the female PTO shaft with grease before installing the pump to the PTO.

Option Code – RZ

Type – Direct Mount
Flange – Rotatable SAE “B” 2 & 4-Bolt
Shaft – SAE “C” (1-1/4" - 14T)

PTO Series:
280 287

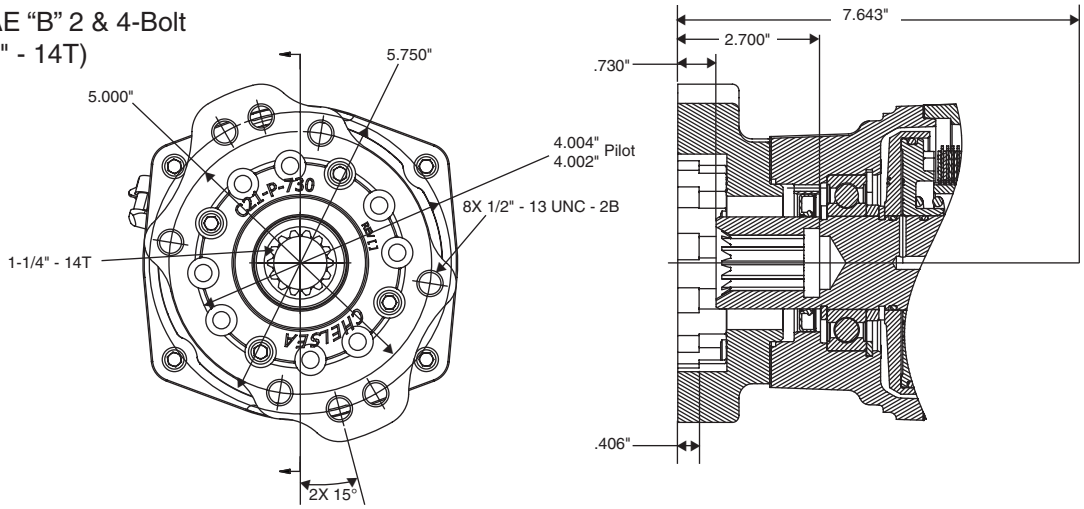

Option Code – RZ

Type – Direct Mount
Flange – Rotatable SAE “B” 2 or 4-Bolt
Shaft – SAE “C” (1-1/4" - 14T)

PTO Series:
870 877

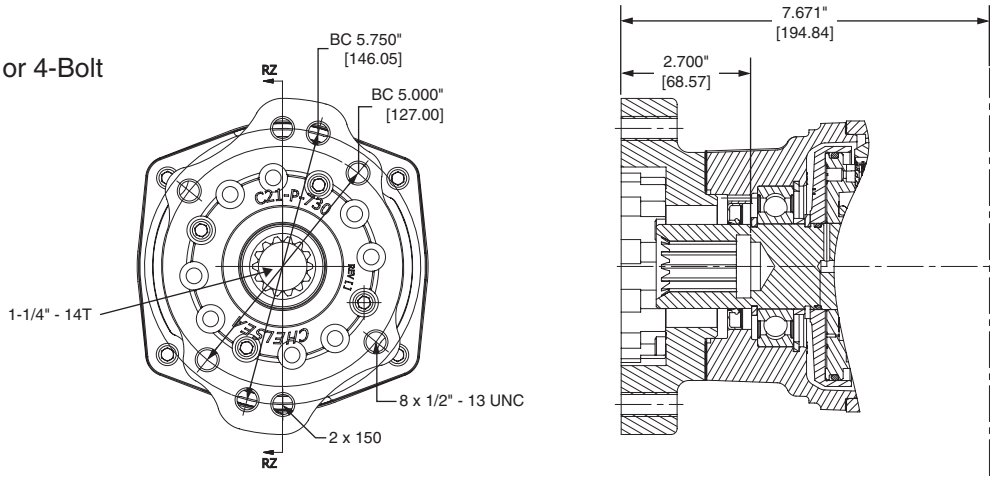

Option Code – SB

Type – Remote Mount
Shaft – Smart Start DIN 120 Flange

PTO Series:
280 287

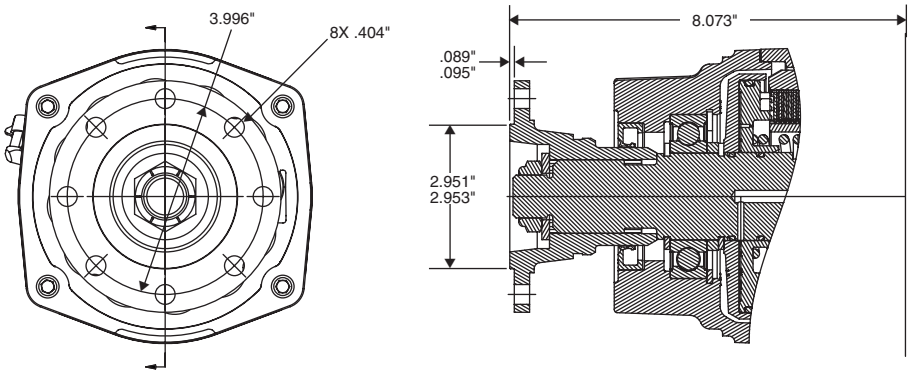

* Recommended Grease: Texaco Coupling Grease, Code 1912 or Equivalent

NOTE: PUMP INSTALLATION PRECAUTIONS
Pump support brackets may be required - see General Safety information section for pump support bracket requirements.
Also remember to pack the female PTO shaft with grease before installing the pump to the PTO.

Parker Hannifin Corporation
Chelsea Products Division
Olive Branch, MS 38654 USA

Option Code – SC

Type – Remote Mount
Shaft – Smart Start DIN 100 Flange

PTO Series:
280 287

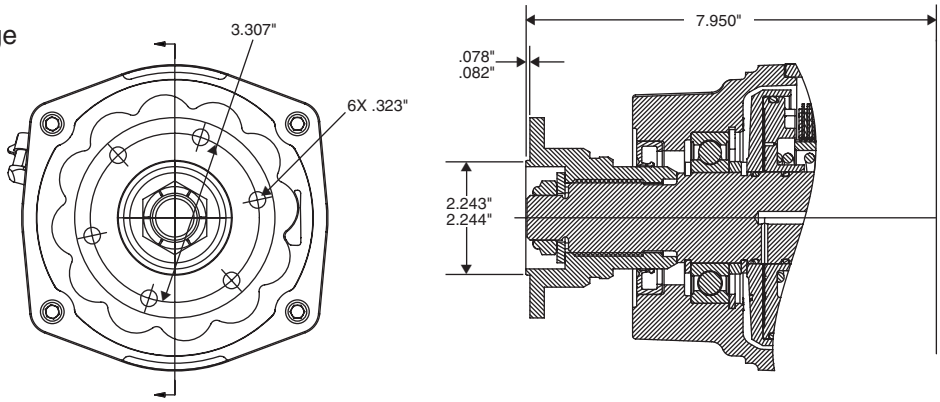

Option Code – SD

Type – Remote Mount
Shaft – Smart Start (1-1/4" Rd. - 5/16" Key)

PTO Series:
280 287

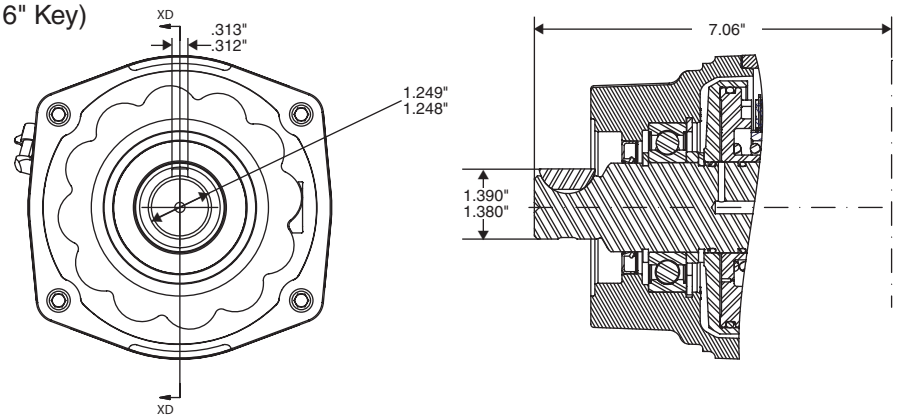

Option Code – SV

Type – Remote Mount
Shaft – Smart Start 1410 Companion Flange

PTO Series:
280 287

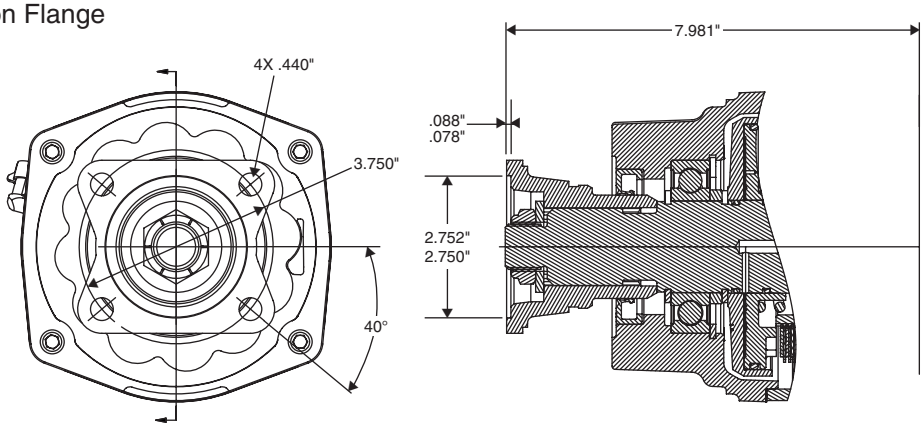

* Recommended Grease: Texaco Coupling Grease, Code 1912 or Equivalent

NOTE: PUMP INSTALLATION PRECAUTIONS
Pump support brackets may be required - see General Safety information section for pump support bracket requirements.
Also remember to pack the female PTO shaft with grease before installing the pump to the PTO.

Flanges

Option Code – SQ

Type – Direct Mount
Flange – SAE “B” 4-Bolt
Shaft – SAE “B” (7/8" - 13T)

PTO Series:
221 442
489

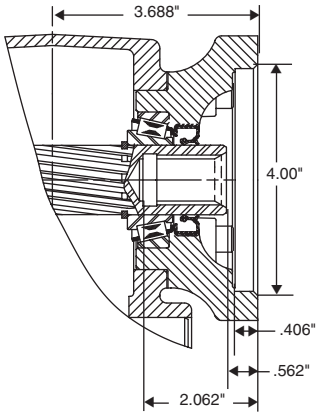

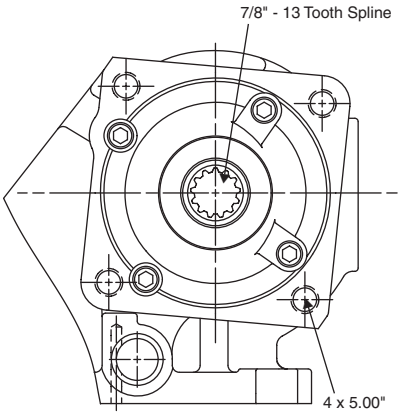

Option Code – UN

Type – Direct Mount
Flange – UNI 8953 3-Bolt Flange
Shaft – DIN 5462 (B6x23x26)
Flange Permits 60° Pump Rotation Increments

PTO Series:
272 282

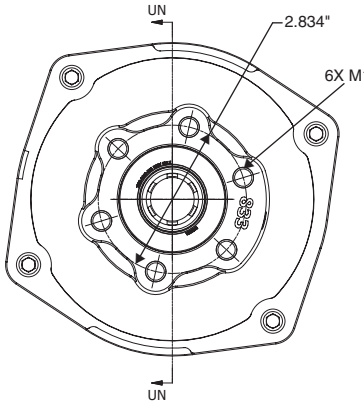

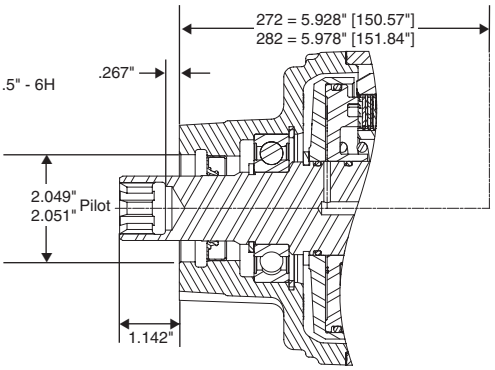

Option Code – UN

Type – Direct Mount
Flange – UNI 8953 3-Bolt
Shaft – DIN 5462 (B6x23x26)

PTO Series:
280 287

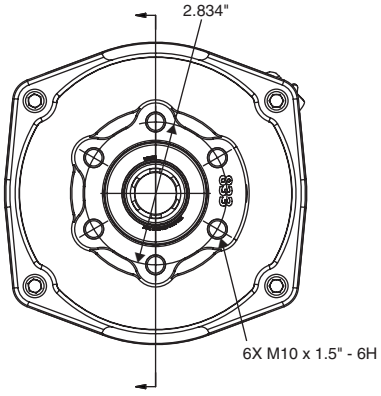

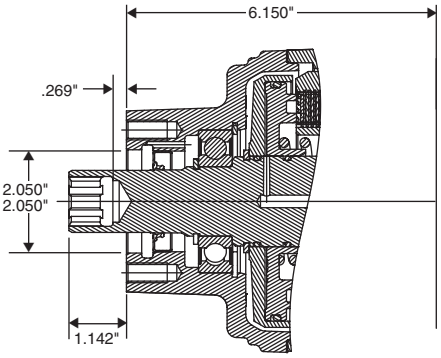

* Recommended Grease: Texaco Coupling Grease, Code 1912 or Equivalent

NOTE: PUMP INSTALLATION PRECAUTIONS
Pump support brackets may be required - see General Safety information section for pump support bracket requirements.
Also remember to pack the female PTO shaft with grease before installing the pump to the PTO.

Parker Hannifin Corporation
Chelsea Products Division
Olive Branch, MS 38654 USA

Option Code – XD
Type – Remote Mount
Shaft – 1-1/4" Rd. w/ 5/16" Key

PTO Series:
247

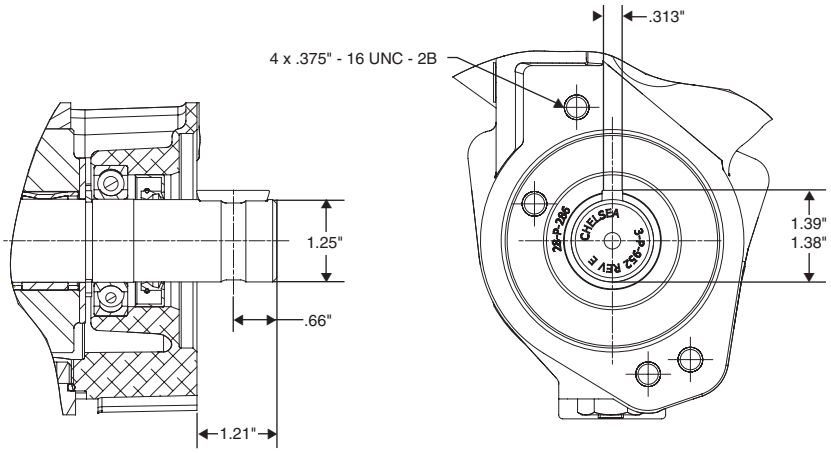

Option Code – XD
Type – Remote Mount
Shaft – (1-1/4" Rd. - 5/16" Key)

PTO Series:
249

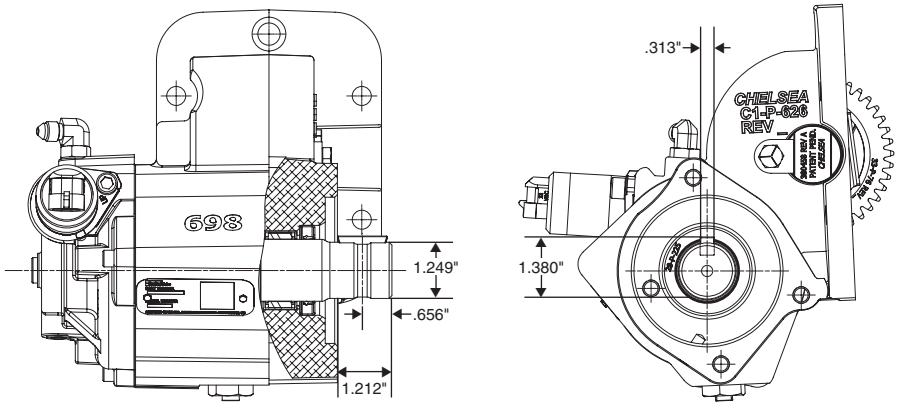

Option Code – XE
Type – Direct Mount
Flange – SAE “A” 2 or 4-Bolt
Shaft – SAE “A” (5/8" - 9T)

PTO Series:

221	489
267	660
290	680
442	2442
447	

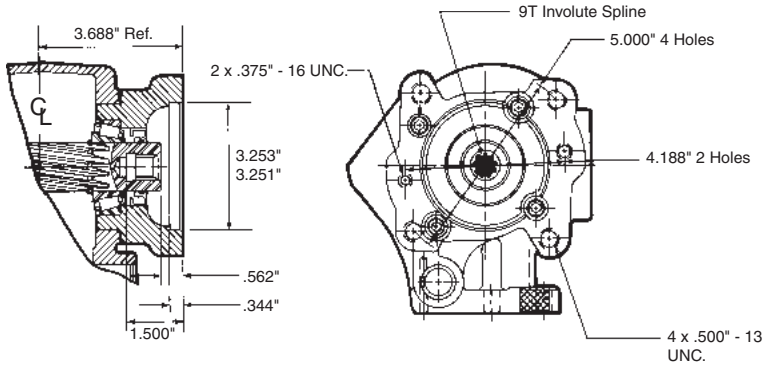

* Recommended Grease: Texaco Coupling Grease, Code 1912 or Equivalent

NOTE: PUMP INSTALLATION PRECAUTIONS
Pump support brackets may be required - see General Safety information section for pump support bracket requirements.
Also remember to pack the female PTO shaft with grease before installing the pump to the PTO.

Parker Hannifin Corporation
Chelsea Products Division
Olive Branch, MS 38654 USA

Option Code – XK
Type – Direct Mount
Flange – SAE “B” 2 or 4-Bolt
Shaft – SAE “B” (7/8" - 13T)

PTO Series:

221	489
267	660
290	680
442	2442
447	

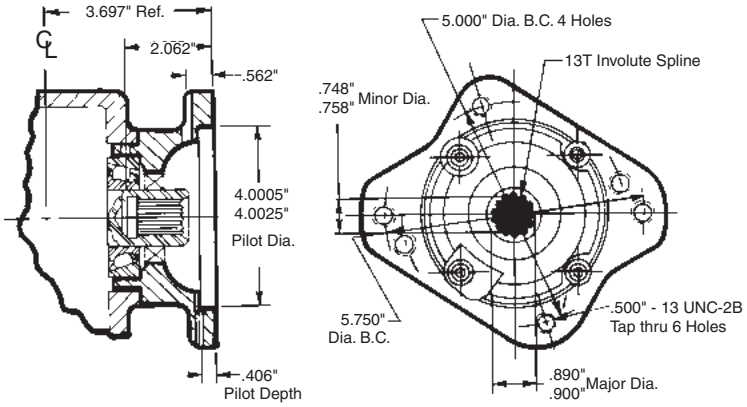

Option Code – XK (Ass’y 3 & 5)
Type – Direct Mount
Flange – SAE “B” 2 or 4-Bolt
Shaft – SAE “B” (7/8" - 13T)

PTO Series:
272 282

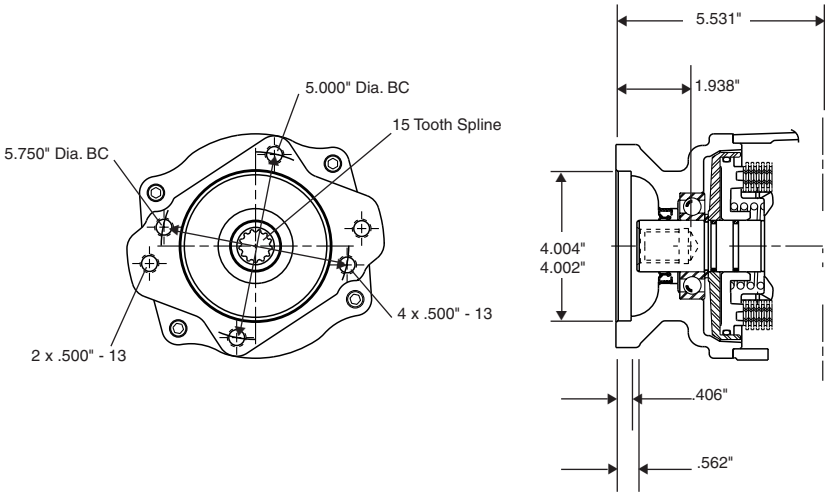

Option Code – XK (Ass’y 4 & 6)
Type – Direct Mount
Flange – SAE “B” 2 or 4-Bolt
Shaft – SAE “B” (7/8" - 13T)

PTO Series:
272 282

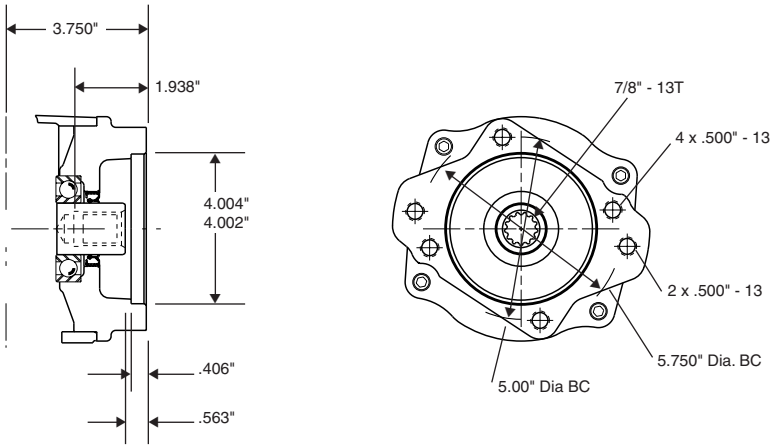

* Recommended Grease: Texaco Coupling Grease, Code 1912 or Equivalent

NOTE: PUMP INSTALLATION PRECAUTIONS
Pump support brackets may be required - see General Safety information section for pump support bracket requirements.
Also remember to pack the female PTO shaft with grease before installing the pump to the PTO.

Option Code – XK

Type – Direct Mount
Flange – SAE “B” 2 or 4-Bolt
Shaft – SAE “B” (7/8" - 13T)

PTO Series:
511

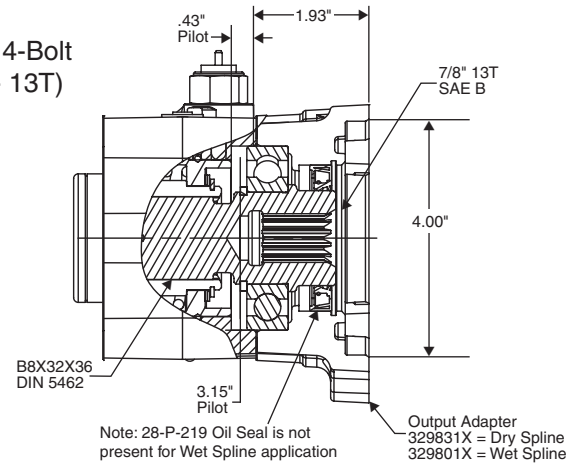

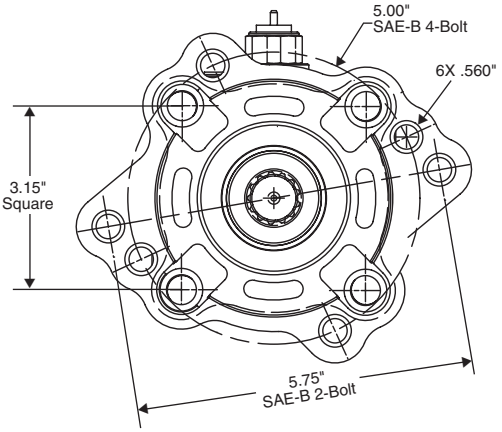

Option Code – XK

Type – Direct Mount
Flange – SAE “B” 2 or 4-Bolt
Shaft – SAE “B” (7/8" - 13T)

PTO Series:
523

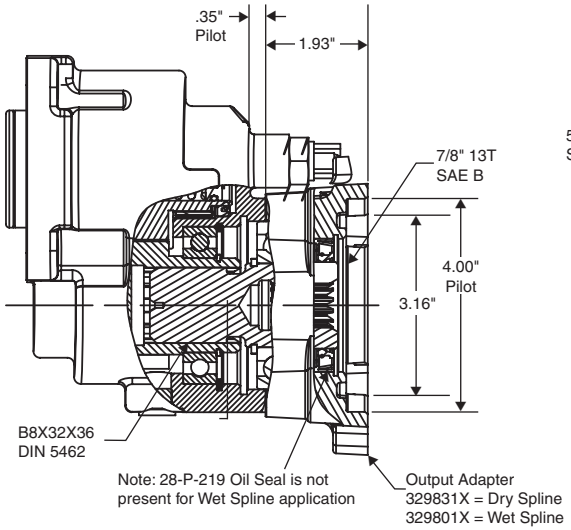

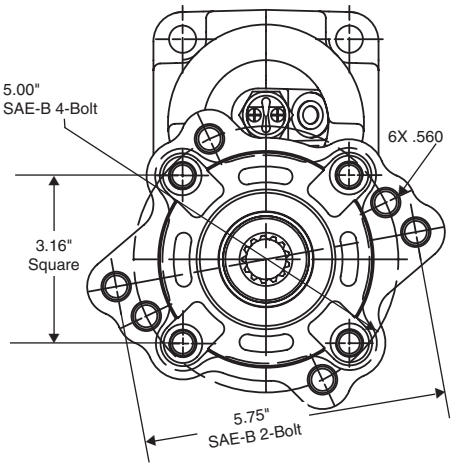

Option Code – XK

Type – Direct Mount
Flange – SAE “B” 2 or 4-Bolt
Shaft – SAE “B” (7/8" - 13T)

PTO Series:
541

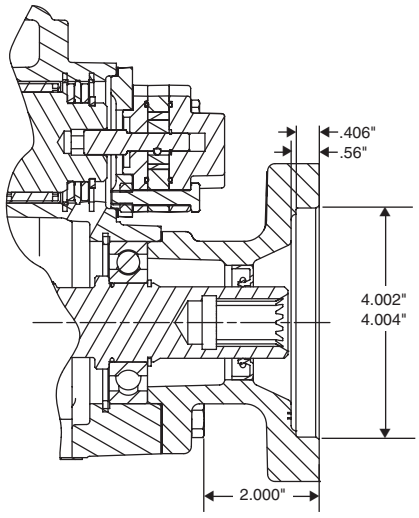

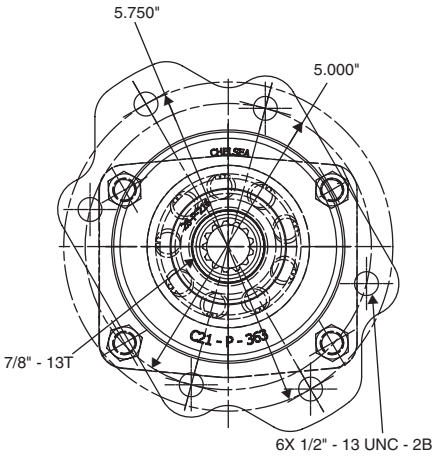

* Recommended Grease: Texaco Coupling Grease, Code 1912 or Equivalent

NOTE: PUMP INSTALLATION PRECAUTIONS
Pump support brackets may be required - see General Safety information section for pump support bracket requirements.
Also remember to pack the female PTO shaft with grease before installing the pump to the PTO.

Parker Hannifin Corporation
Chelsea Products Division
Olive Branch, MS 38654 USA

Option Code – XK
Type – Direct Mount
Flange – SAE “B” 2 or 4-Bolt
Shaft – SAE “B” (7/8" - 13T)

PTO Series:
880

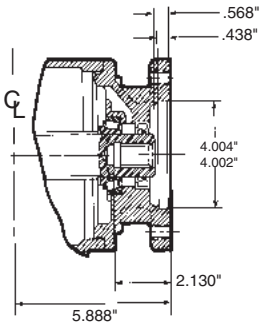

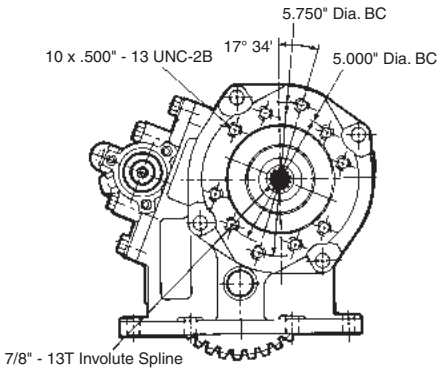

Option Code – XK
Type – Direct Mount
Flange – SAE “B” 2 or 4-Bolt
Shaft – SAE “B” (7/8" - 13T)

PTO Series:
890 897
892 899

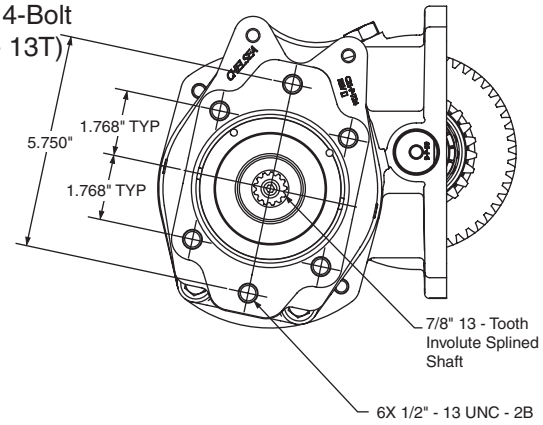

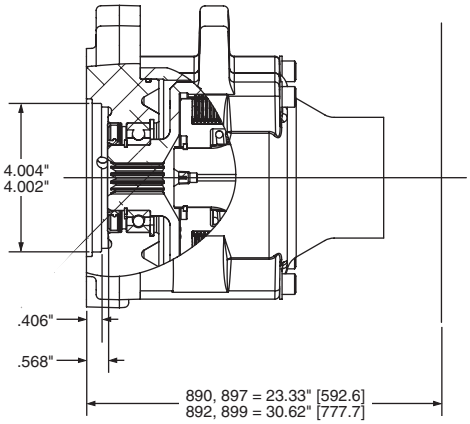

Ass’y “5”

Option Code – XK
Type – Direct Mount
Flange – SAE “B” 2 or 4-Bolt
Shaft – SAE “B” (7/8" - 13T)

PTO Series:
CAT-D

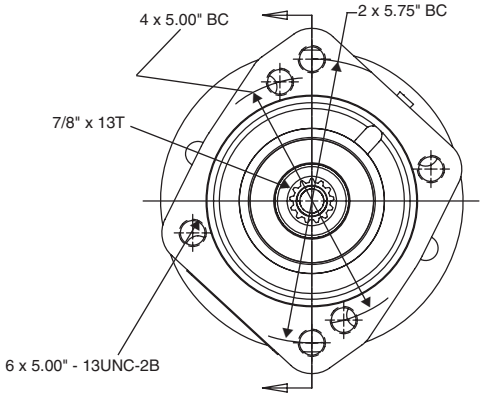

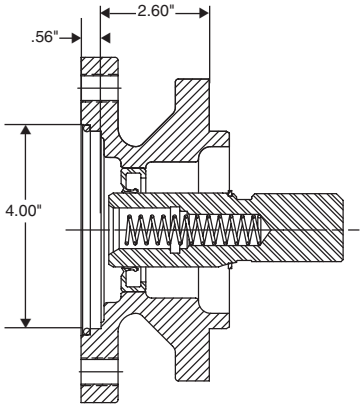

* Recommended Grease: Texaco Coupling Grease, Code 1912 or Equivalent

NOTE: PUMP INSTALLATION PRECAUTIONS
Pump support brackets may be required - see General Safety information section for pump support bracket requirements.
Also remember to pack the female PTO shaft with grease before installing the pump to the PTO.

Parker Hannifin Corporation
Chelsea Products Division
Olive Branch, MS 38654 USA

Option Code – XK
Type – Direct Mount
Flange – SAE “B” 2 or 4-Bolt
Shaft – SAE “B” (7/8" - 13T)

PTO Series:
CAT-H

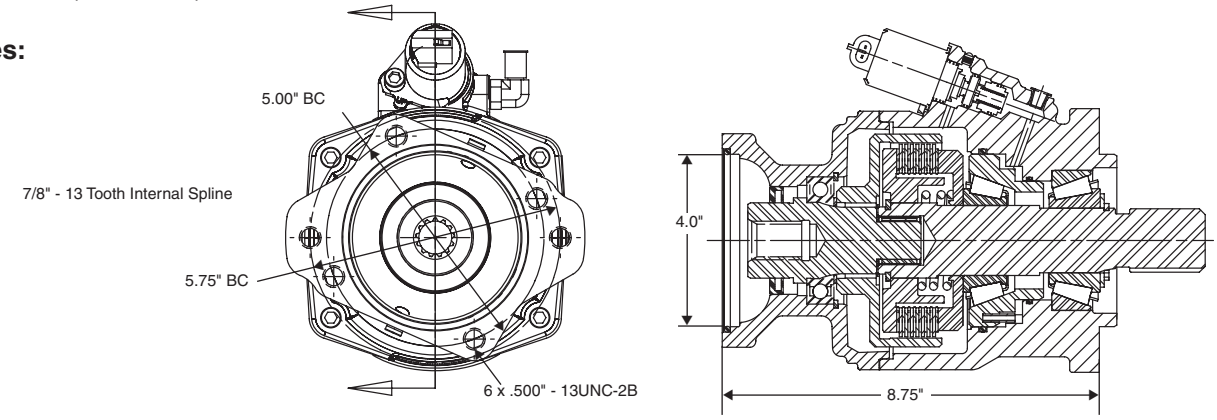

Option Code – XP (Ass’y 3 & 5)
Type – Direct Mount
Flange – SAE “A” 2 or 4-Bolt
Shaft – SAE “B” (7/8" - 13T)

PTO Series:
272 282

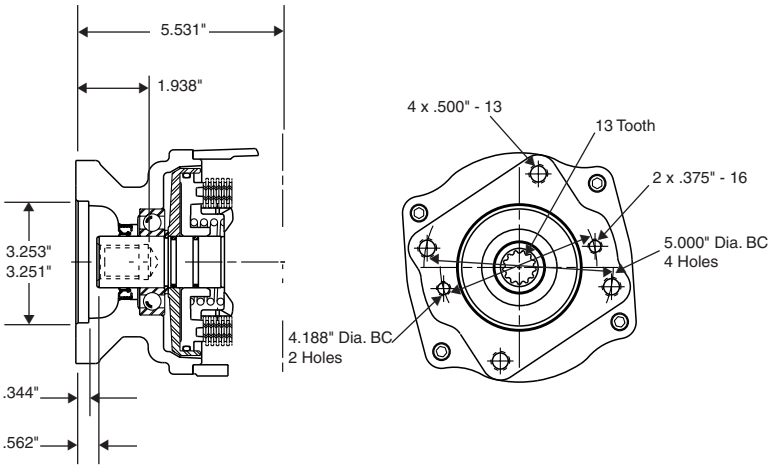

Option Code – XP (Ass’y 4 & 6)
Type – Direct Mount
Flange – SAE “A” 2 or 4-Bolt
Shaft – SAE “B” (7/8" - 13T)

PTO Series:
272 282

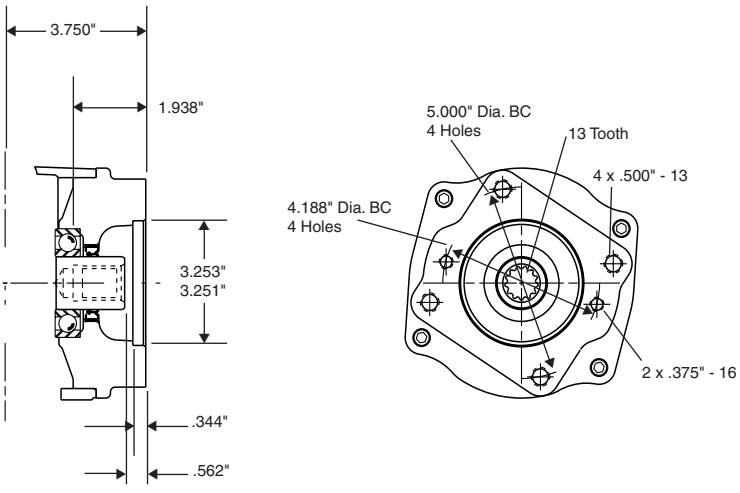

* Recommended Grease: Texaco Coupling Grease, Code 1912 or Equivalent

NOTE: PUMP INSTALLATION PRECAUTIONS
Pump support brackets may be required - see General Safety information section for pump support bracket requirements.
Also remember to pack the female PTO shaft with grease before installing the pump to the PTO.

Parker Hannifin Corporation
Chelsea Products Division
Olive Branch, MS 38654 USA

Option Code – XP
Type – Direct Mount
Flange – SAE “A” 2-Bolt
Shaft – SAE “B” (7/8" - 13T)

PTO Series:
247

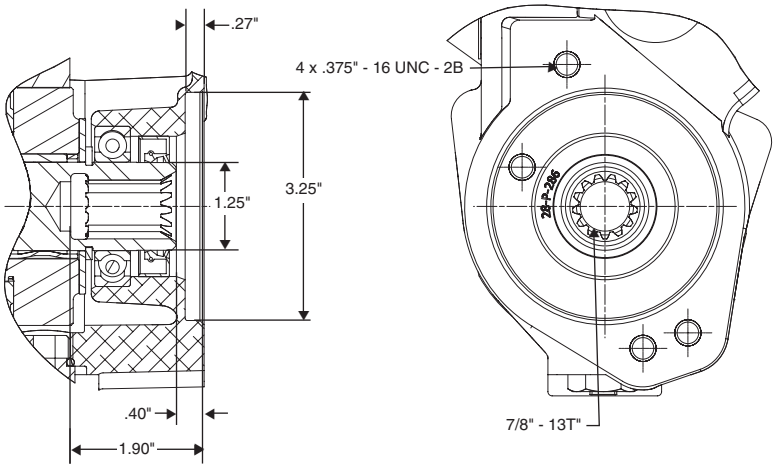

Option Code – XP
Type – Direct Mount
Flange – SAE “A” 2-Bolt
Shaft – SAE “B” (7/8" - 13T)

PTO Series:
249

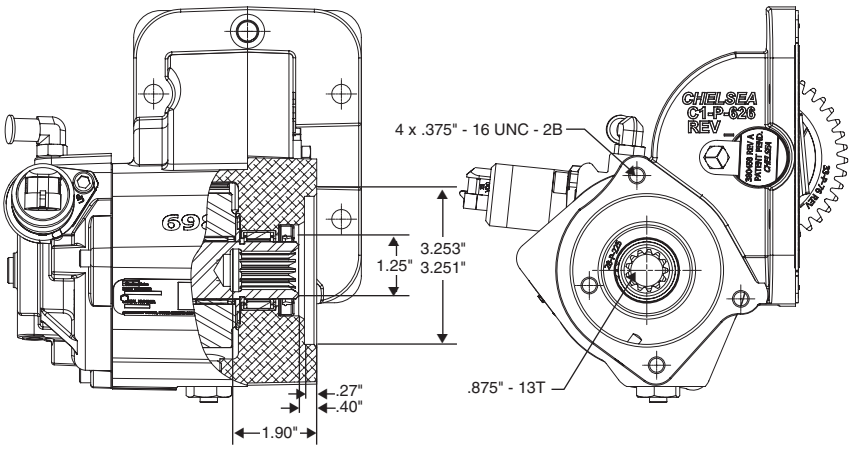

Option Code – XQ
Type – Direct Mount
Flange – SAE “B” 2 or 4-Bolt
Shaft – SAE “B” (7/8" - 13T)

PTO Series:

221	489
267	660
442	680
447	2442

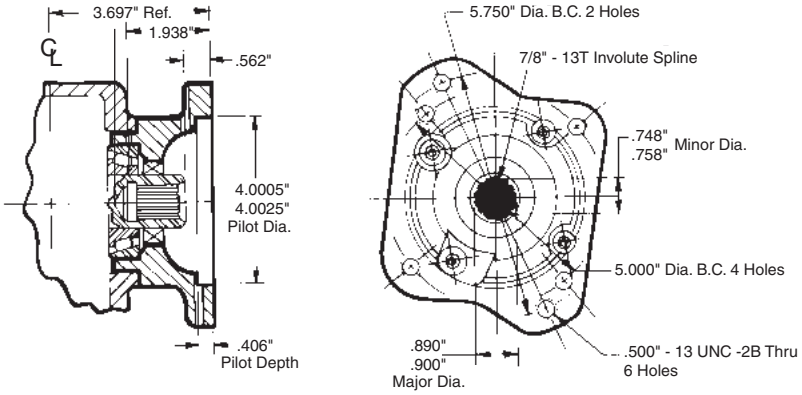

* Recommended Grease: Texaco Coupling Grease, Code 1912 or Equivalent

NOTE: PUMP INSTALLATION PRECAUTIONS
Pump support brackets may be required - see General Safety information section for pump support bracket requirements.
Also remember to pack the female PTO shaft with grease before installing the pump to the PTO.

Option Code – XR
Type – Direct Mount
Flange – Chelsea Special (Cloverleaf)
Shaft – SAE “B” (7/8" - 13T)

PTO Series:

221	489
267	660
442	680
447	2442

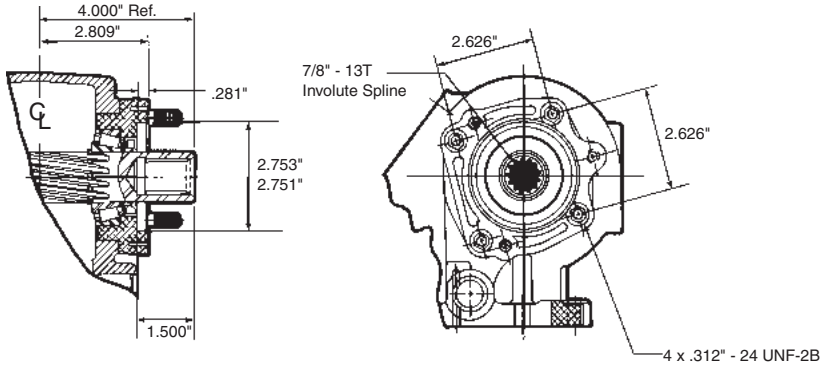

Option Code – XR (Ass’y 3 & 5)
Type – Direct Mount
Flange – Chelsea Special (Cloverleaf)
Shaft – SAE “B” (7/8" - 13T)

For Parker P16 “S” Flange Pumps

PTO Series:

272	282

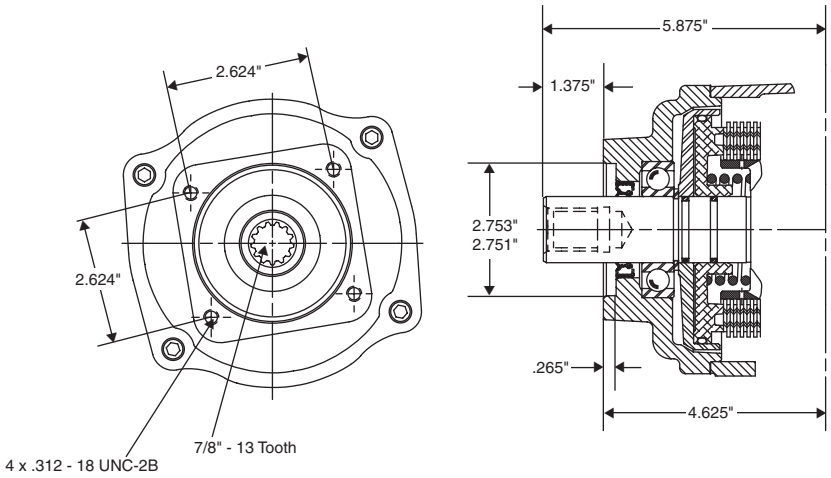

Option Code – XS
Type – Direct Mount
Flange – SAE “C” 2 or 4-Bolt
Shaft – SAE “C” (1-1/4" - 14T)

PTO Series:
823

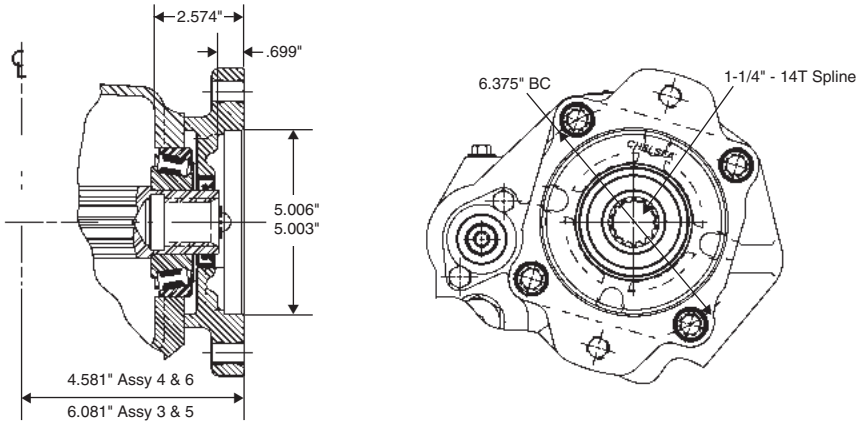

* Recommended Grease: Texaco Coupling Grease, Code 1912 or Equivalent

NOTE: PUMP INSTALLATION PRECAUTIONS
Pump support brackets may be required - see General Safety information section for pump support bracket requirements.
Also remember to pack the female PTO shaft with grease before installing the pump to the PTO.

Option Code – XS

Type – Direct Mount
Flange – SAE “C” 2 & 4-Bolt
Shaft – SAE “C” (1-1/4" - 14T)

PTO Series:
852 885

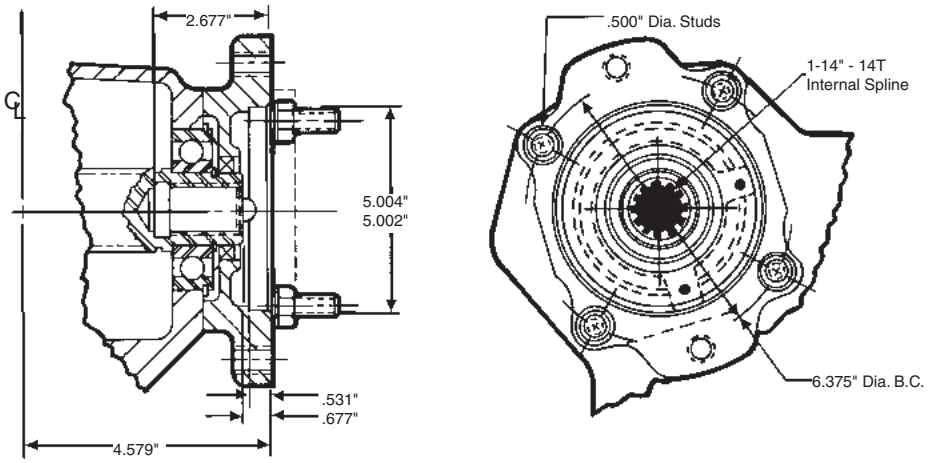

Option Code – XS

Type – Direct Mount
Flange – SAE “C” 2 or 4-Bolt
Shaft – SAE “C” (1-1/4" - 14T)

PTO Series:
880

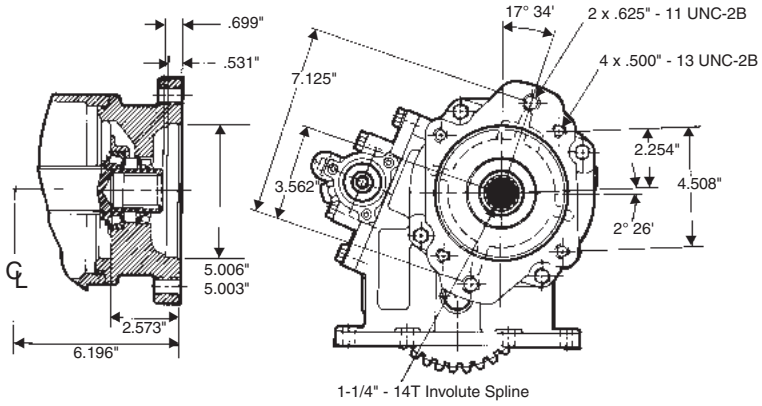

* Recommended Grease: Texaco Coupling Grease, Code 1912 or Equivalent

NOTE: PUMP INSTALLATION PRECAUTIONS
Pump support brackets may be required - see General Safety information section for pump support bracket requirements.
Also remember to pack the female PTO shaft with grease before installing the pump to the PTO.

Option Code – XS

Type – Direct Mount
Flange – SAE “C” 2 or 4-Bolt
Shaft – SAE “C” (1-1/4" - 14T)

PTO Series:
890 897
892 899

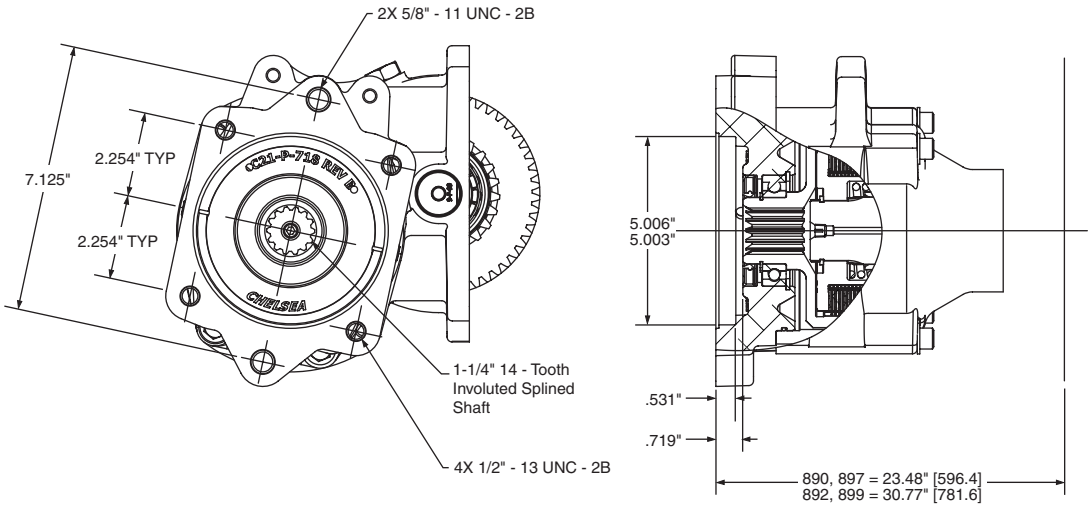

Ass’y “5”

Option Code – XU

Type – Direct Mount
Flange – SAE “C” 2-Bolt
Shaft – SAE “C” (1-1/4" - 14T)

PTO Series:
823

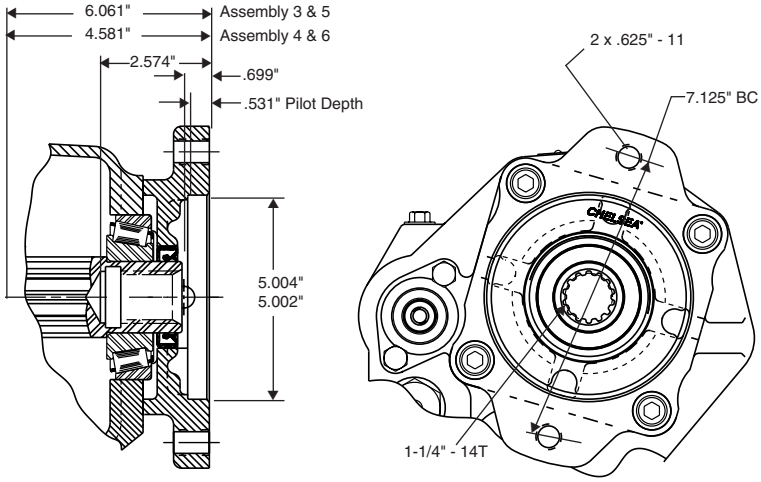

* Recommended Grease: Texaco Coupling Grease, Code 1912 or Equivalent

NOTE: PUMP INSTALLATION PRECAUTIONS
Pump support brackets may be required - see General Safety information section for pump support bracket requirements.
Also remember to pack the female PTO shaft with grease before installing the pump to the PTO.

Option Code – XU

Type – Direct Mount
Flange – SAE “C” 2-Bolt
Shaft – SAE “C” Shaft (1-1/4" - 14T)

PTO Series:
852

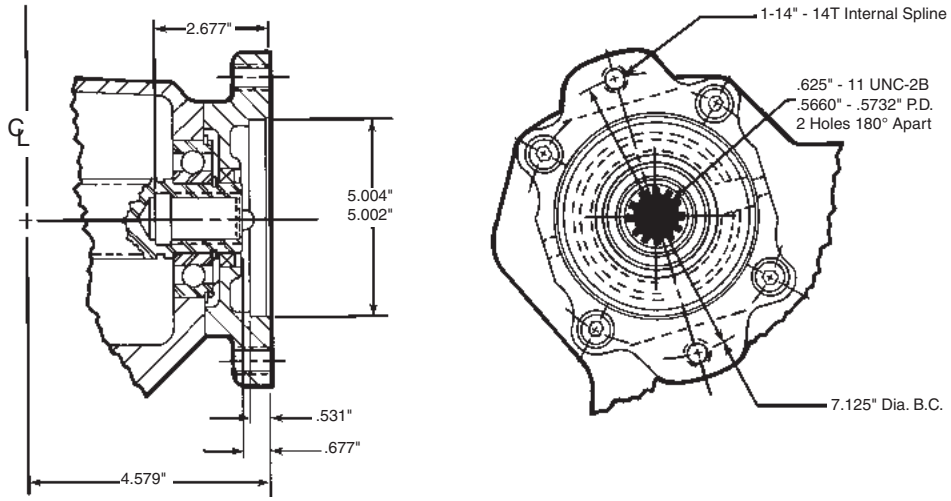

Option Code – XV

Type – Remote Mount
Shaft – 1410 Companion Flange

PTO Series:
272 282

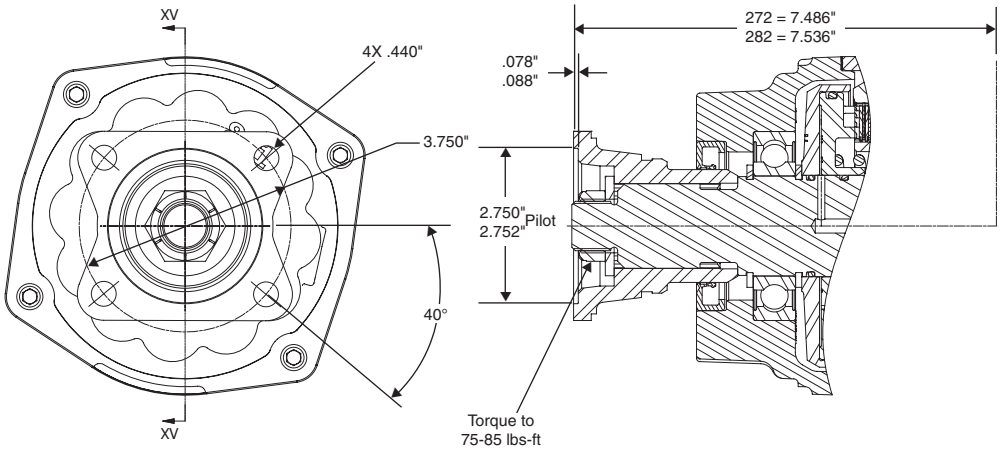

* Recommended Grease: Texaco Coupling Grease, Code 1912 or Equivalent

NOTE: PUMP INSTALLATION PRECAUTIONS
Pump support brackets may be required - see General Safety information section for pump support bracket requirements.
Also remember to pack the female PTO shaft with grease before installing the pump to the PTO.

Option Code – XV

Type – Remote Mount
Shaft – 1410 Companion Flange

PTO Series:
280 287

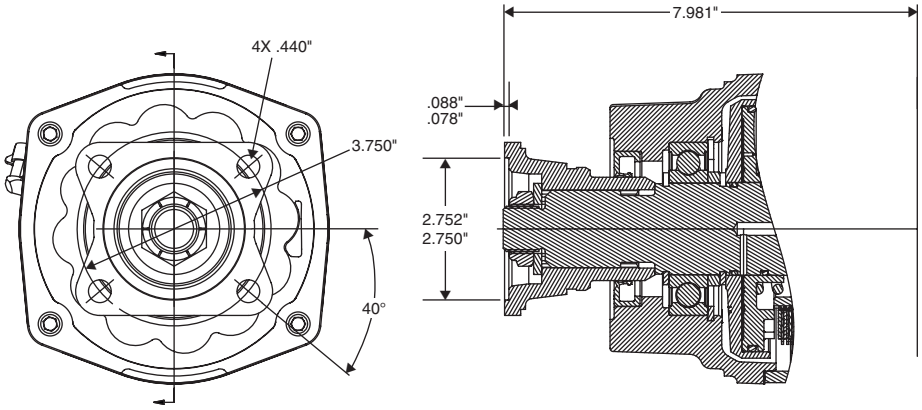

Option Code – XV

Type – Remote Mount
Shaft – 1410 Companion Flange

PTO Series:
511

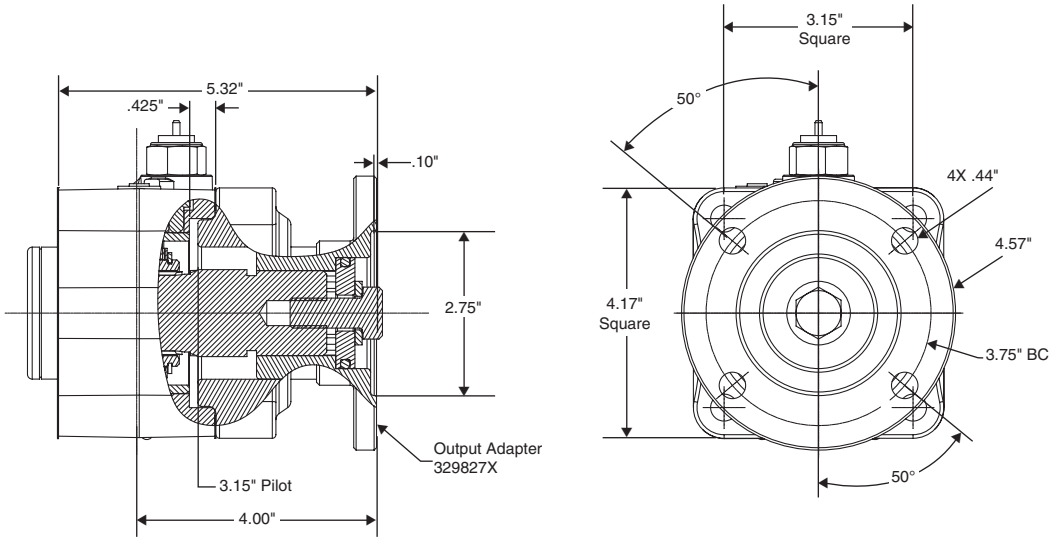

* Recommended Grease: Texaco Coupling Grease, Code 1912 or Equivalent

NOTE: PUMP INSTALLATION PRECAUTIONS
Pump support brackets may be required - see General Safety information section for pump support bracket requirements.
Also remember to pack the female PTO shaft with grease before installing the pump to the PTO.

Parker Hannifin Corporation
Chelsea Products Division
Olive Branch, MS 38654 USA

Option Code – XV

Type – Remote Mount
Shaft – 1410 Companion Flange

PTO Series:
523

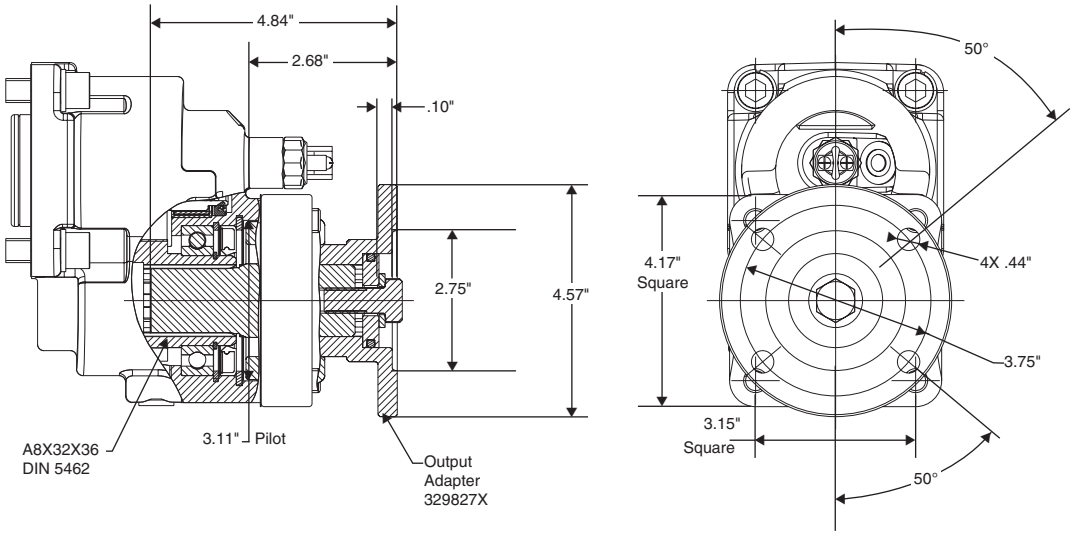

Option Code – XV

Type – Remote Mount
Shaft – 1350/1410 Companion Flange

PTO Series:
660 680

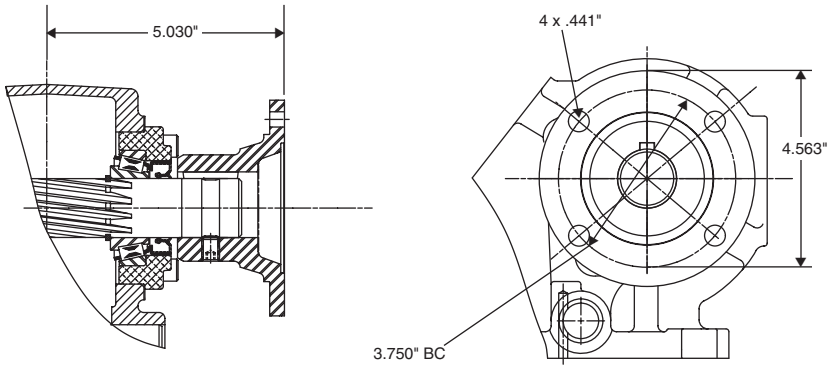

Option Code – XV

Type – Remote Mount
Shaft – 1410 Companion Flange

PTO Series:
823 863
880

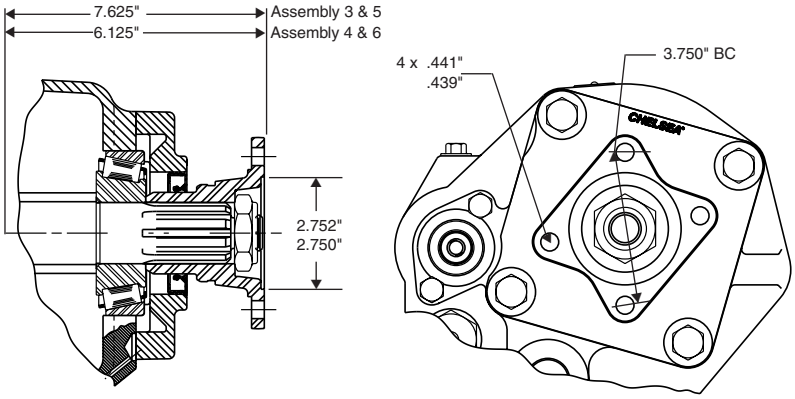

* Recommended Grease: Texaco Coupling Grease, Code 1912 or Equivalent

NOTE: PUMP INSTALLATION PRECAUTIONS
Pump support brackets may be required - see General Safety information section for pump support bracket requirements.
Also remember to pack the female PTO shaft with grease before installing the pump to the PTO.

Parker Hannifin Corporation
Chelsea Products Division
Olive Branch, MS 38654 USA

Option Code – XV

Type – Remote Mount
Shaft – 1410 Companion Flange

PTO Series:

890	897
892	899

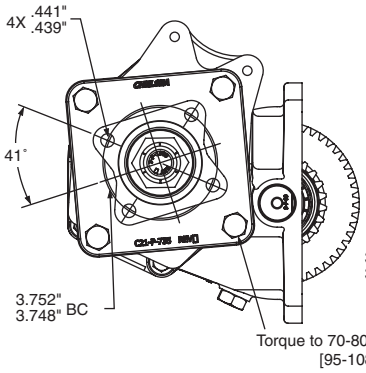

Ass'y "3"

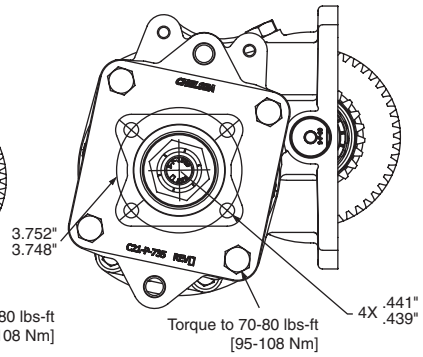

Ass'y "5"

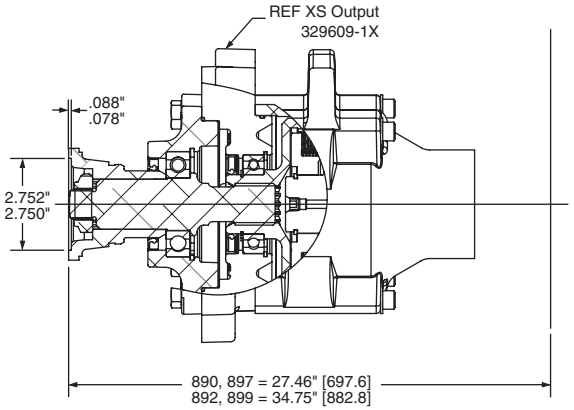

Ass'y "3" & "5"

Option Code – XX

Type – Remote Mount
Shaft – 1-1/4" SAE Taper Shaft

PTO Series:

221	489
267	660
290	680
442	2442

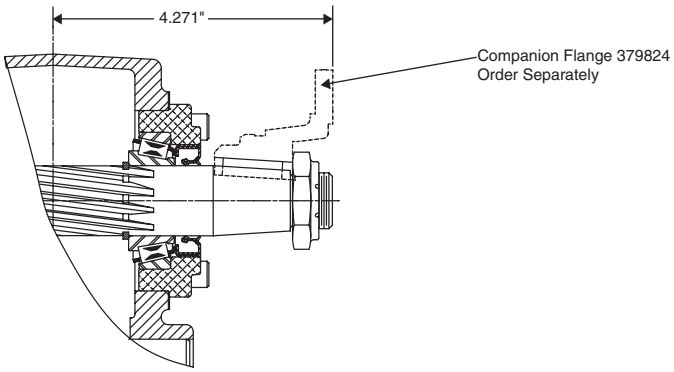

Option Code – XY

Type – Direct Mount
Flange – ISO 7653 Pump Mounting
Shaft – DIN 5462 (B8x32x36 - 8T)

PTO Series:

221	489
267	660
290	680
442	2442

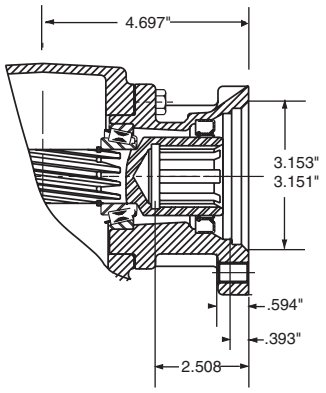

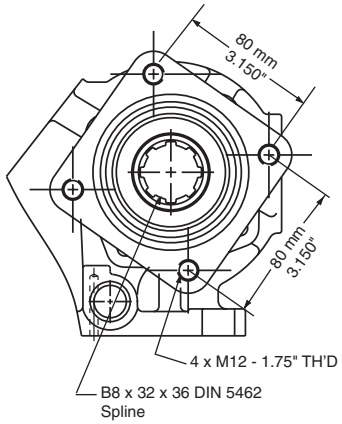

* Recommended Grease: Texaco Coupling Grease, Code 1912 or Equivalent

NOTE: PUMP INSTALLATION PRECAUTIONS
Pump support brackets may be required - see General Safety information section for pump support bracket requirements.
Also remember to pack the female PTO shaft with grease before installing the pump to the PTO.

Option Code – XY
Type – Direct Mount
Flange – ISO 7653 Pump Mounting
Shaft – DIN 5462 (B8x32x36 - 8T)

PTO Series:
272 282

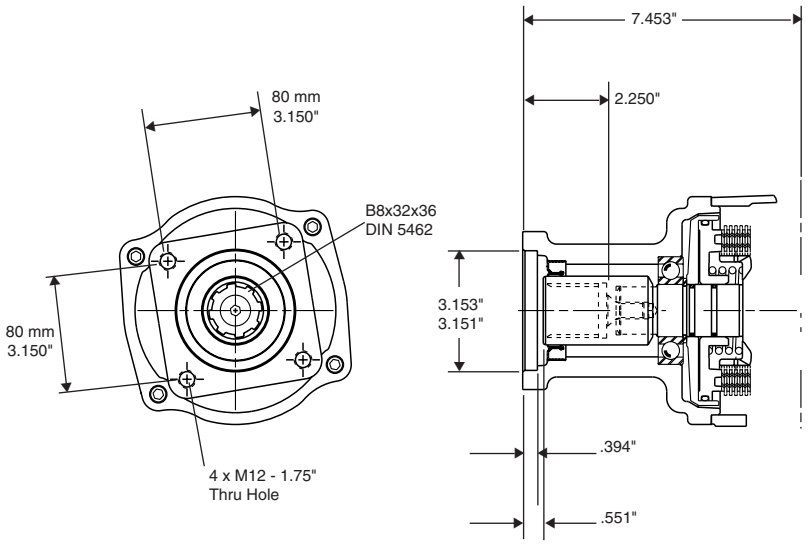

Option Code – XY
Type – Direct Mount
Flange – ISO 7653 Pump Mounting
Shaft – DIN 5462 (B8x32x36-8T)

PTO Series:
511

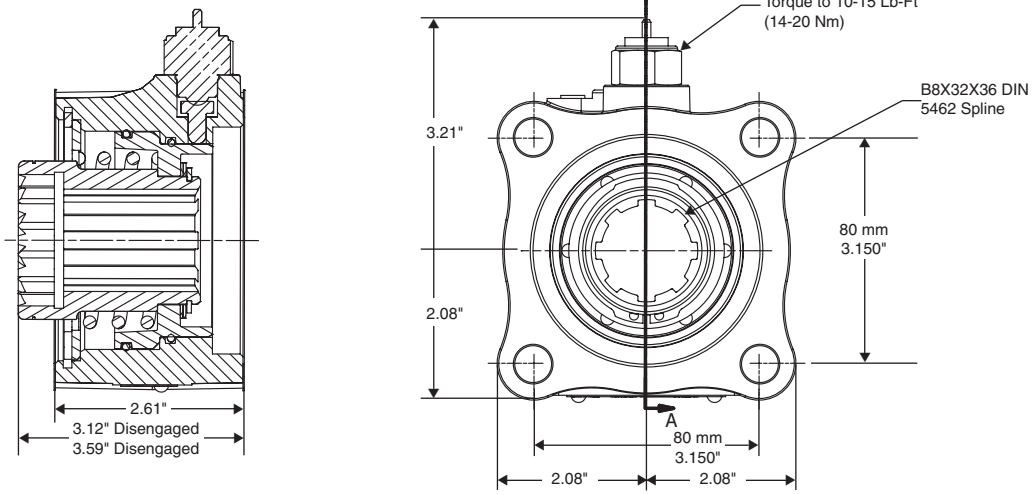

* Recommended Grease: Texaco Coupling Grease, Code 1912 or Equivalent

NOTE: PUMP INSTALLATION PRECAUTIONS
Pump support brackets may be required - see General Safety information section for pump support bracket requirements.
Also remember to pack the female PTO shaft with grease before installing the pump to the PTO.

Option Code – XY

Type – Direct Mount
Flange – ISO 7653 Pump Mounting
Shaft – DIN 5462 (B8x32x36-8T)

PTO Series:
523

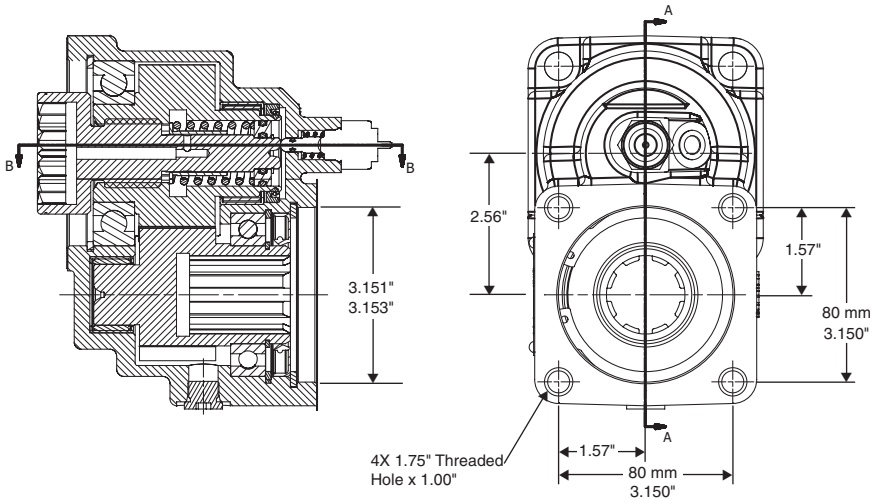

Option Code – XY

Type – Direct Mount
Flange – ISO 7653 Pump Mounting
Shaft – DIN 5462 (B8x32x36-8T)

PTO Series:
823

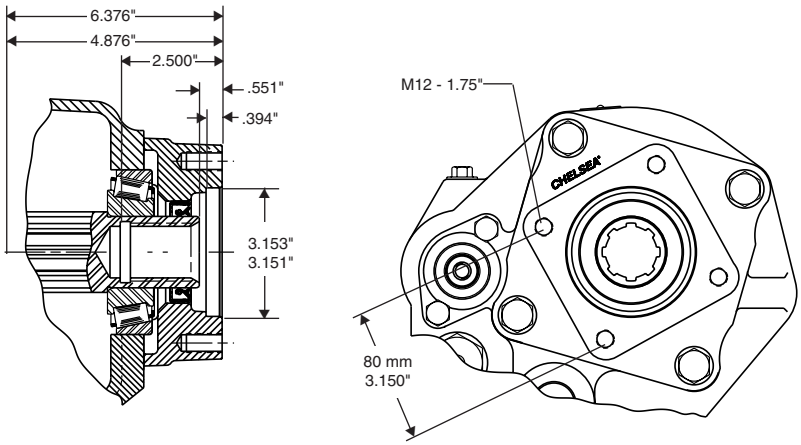

Option Code – XY

Type – Direct Mount
Flange – ISO 7653 Pump Mounting
Shaft – DIN 5462 (B8x32x36-8T)

PTO Series:
880

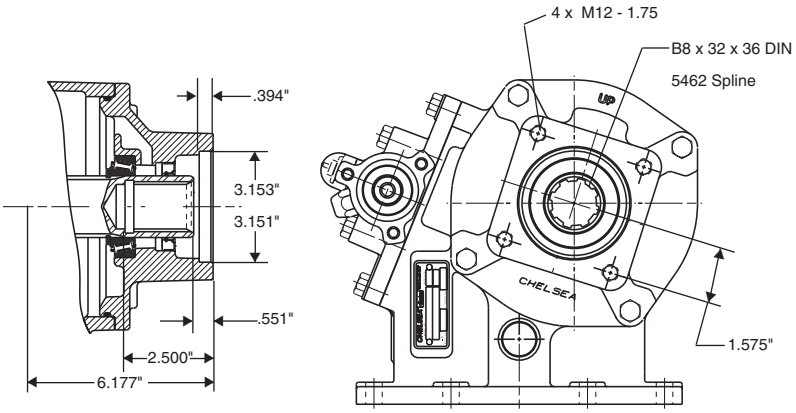

* Recommended Grease: Texaco Coupling Grease, Code 1912 or Equivalent

NOTE: PUMP INSTALLATION PRECAUTIONS
Pump support brackets may be required - see General Safety information section for pump support bracket requirements.
Also remember to pack the female PTO shaft with grease before installing the pump to the PTO.

Parker Hannifin Corporation
Chelsea Products Division
Olive Branch, MS 38654 USA

Option Code – XY

Type – Direct Mount
Flange – ISO 7653 Pump Mounting
Shaft – DIN 5462 (B8x32x36-8T)

PTO Series:
890 897
892 899

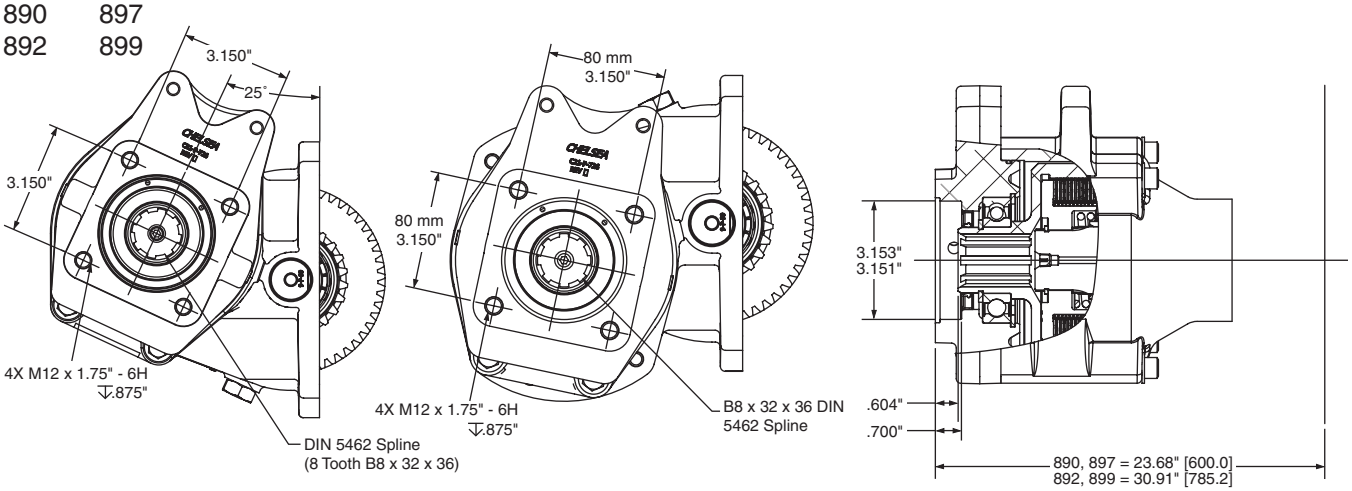

Ass'y "3" Ass'y "5" Ass'y "3" & "5"

Option Code – YY

Type – Direct Mount
Flange – ISO 7653 Pump Mounting
Shaft – DIN 5462 (B8x32x36-8T)

PTO Series:
823

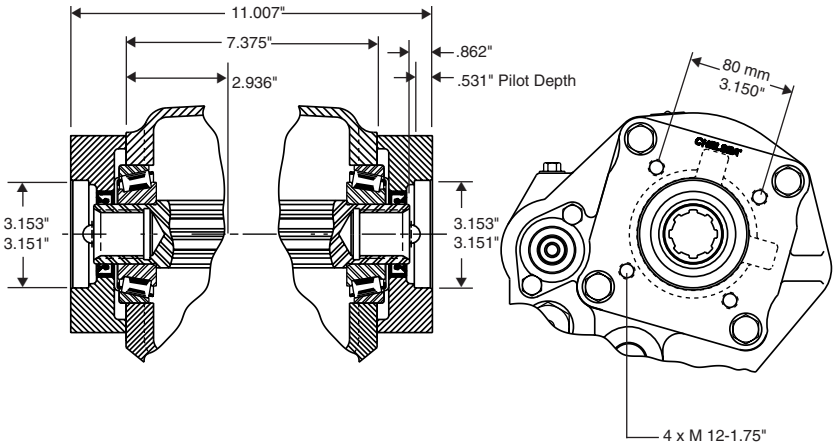

* Recommended Grease: Texaco Coupling Grease, Code 1912 or Equivalent

NOTE: PUMP INSTALLATION PRECAUTIONS
Pump support brackets may be required - see General Safety information section for pump support bracket requirements.
Also remember to pack the female PTO shaft with grease before installing the pump to the PTO.

Flanges

Option Code – ZS

Type – Direct Mount
Flange – SAE “C” 4-Bolt
Shaft – SAE “C” (1-1/4" - 14T)

PTO Series:
890 897
892 899

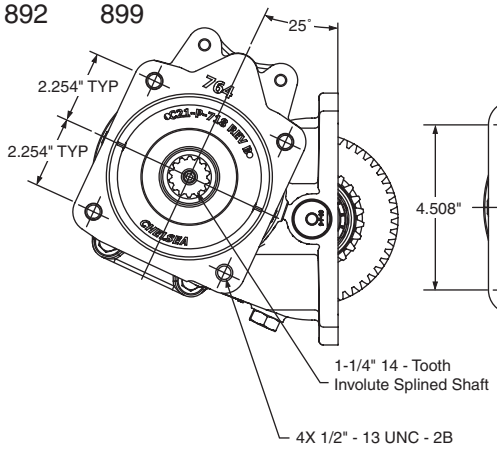

Ass’y “3”

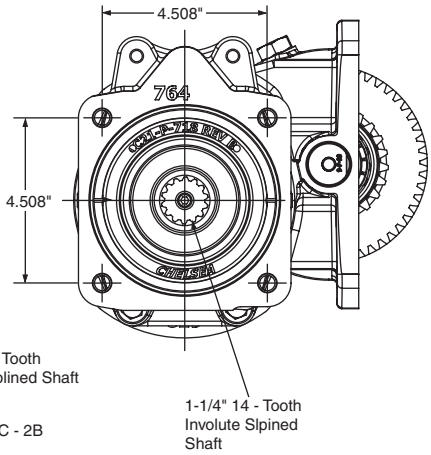

Ass’y “5”

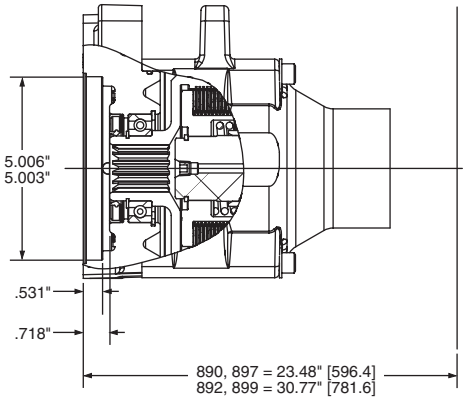

Ass’y “3” & “5”

21-P-525

Flange – SAE 2 or 4-Bolt
(XR to XK Conversion Flange)

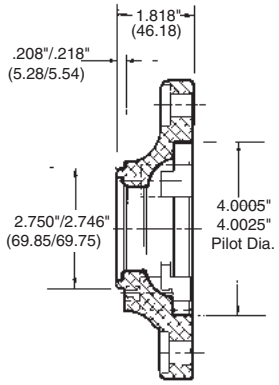

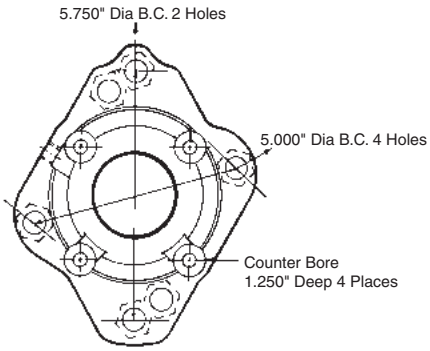

* Recommended Grease: Texaco Coupling Grease, Code 1912 or Equivalent

NOTE: PUMP INSTALLATION PRECAUTIONS
Pump support brackets may be required - see General Safety information section for pump support bracket requirements.
Also remember to pack the female PTO shaft with grease before installing the pump to the PTO.

Parker Hannifin Corporation
Chelsea Products Division
Olive Branch, MS 38654 USA

Notes

Parker Hannifin Corporation
Chelsea Products Division
Olive Branch, MS 38654 USA

ASSEMBLY OPTIONS

Parker Chelsea

ENGINEERING YOUR SUCCESS.

Parker Hannifin Corporation
Chelsea Products Division
Olive Branch, MS 38654 USA

221 Series 4.1
247 Series 4.2
249 Series 4.3
252 Series 4.4
267 Series 4.5
272 Series 4.6
280 Series 4.7
282 Series 4.8
287 Series 4.9
290 Series 4.10
340 Series 4.11
348 Series 4.12
352 Series 4.13
442 Series 4.14
447 Series 4.15
489 Series 4.16
511 Series 4.17
523 Series 4.18
541 Series 4.19
560 Series 4.20
590 Series 4.21
660 Series 4.22
680 Series 4.23
823 Series 4.24
852 Series 4.25
863 Series 4.26
870 Series 4.27
877 Series 4.28
880 Series 4.29
885 Series 4.30
890 Series 4.31
892 Series 4.32
897 Series 4.33
899 Series 4.34
901 Series 4.35
912 Series 4.36
941 Series 4.37
CAT-D 4.38
CAT-H 4.39
2442 Series 4.40
626, 628, 630 and 645 Series 4.41

Assembly

Parker Hannifin Corporation
Chelsea Products Division
Olive Branch, MS 38654 USA

Parker Hannifin Corporation
Chelsea Products Division
Olive Branch, MS 38654 USA

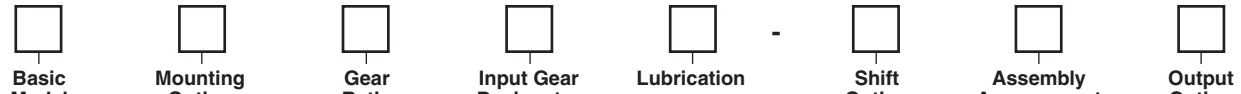

Basic Model

221

Mounting Option

Option Code	
R	Special Housing
X	Standard Mount
Z	Deep Mount

Gear Ratio

C	14/29
E	15/28
L	18/25

Input Gear Designator

Input Gear Designator
221*C**AH**
221*C**AJ**
221*C**AK*-M**
221*C**DA**
221*E**AH**
221*E**AJ**
221*E**AK*-M**
221*E**DA**
221*L**AH**
221*L**DA**

Lubrication

Option Code	
P	Pressure Lube
X	No Pressure Lube

Shift Option

Option Code	
P	12V Elec/Air Shift
H	No Shift Assembly
[1]A	Air Shift
[21]S	Air Shift w/ PTO/Dump Pump Combo Valve w/ Kick Out w/ Neutral Spring Return
[21]T	Air Shift w/ PTO/Dump Pump Combo Valve w/o Kick Out w/ Neutral Spring Return
[21]U	Air Shift w/ PTO/Dump Pump Combo Valve w/ Kick Out w/o Neutral Spring Return
V	Air Shift w/o Installation Kit
[1]W	Wire Shift
X	Wire Shift w/o Cable & Knob
C	Special Shift Control & Bracket Kit
[4]M	Constant Mesh

Assembly Arrangement

Option Code
3
4
5
6

Output Option

Option Code	
AF	SAE “B” 2 or 4-Bolt Flange, SAE “BB” Shaft (1" - 15T)
AK	SAE “B” 2-Bolt Flange, SAE “B” Shaft (7/8" - 13T)
AZ	Non Standard Flange, SAE “C” Shaft (1-1/4" - 14T)
XD	Rd Standard Shaft (1-1/4" - 5/16" Key)
XE	SAE “B” 2 or 4-Bolt Flange, SAE “A” Shaft (5/8" - 9T)
XK	SAE “B” 2 or 4-Bolt Flange, SAE “B” Shaft (7/8" - 13T)
XQ	SAE “B” 2 or 4-Bolt Flange, SAE “B” Shaft (7/8" - 13T)
XR	Chelsea Special (Cloverleaf), SAE “B” Shaft (7/8" - 13T)
XX	1-1/4" Tapered Output Shaft w/ Keyway
XY	ISO 7653 Pump Mount DIN 5462 Shaft
RC	Rotatable SAE “A” 2-Bolt Flange, SAE “A” Shaft (5/8" - 9T)
RA	Rotatable SAE “B” 2-Bolt Flange, SAE “B” Shaft (7/8" - 13T)
RF	Rotatable SAE “B” 2-Bolt Flange, SAE “BB” Shaft (1" - 15T)
RB	Rotatable SAE “B” 4-Bolt Flange, SAE “B” Shaft (7/8" - 13T)
RY	Rotatable ISO 7653 Pump Mount DIN 5462 Shaft
GA	Greaseable SAE “B” 2-Bolt Rotatable Flange, SAE “B” Shaft (7/8" - 13T)
GH	Greaseable SAE “B” 2-Bolt Rotatable Flange, SAE “BB” Shaft (1" - 15T)
GB	Greaseable SAE “B” 4-Bolt Rotatable Flange, SAE “B” Shaft (7/8" - 13T)
GK	Greaseable SAE “B” 2 or 4-Bolt Flange, SAE “B” Shaft (7/8" - 13T)
GQ	Greaseable SAE “B” 2 or 4-Bolt Flange, SAE “B” Shaft (7/8" - 13T)
GF	Greaseable SAE “B” 2 or 4-Bolt Flange, SAE “BB” Shaft (1" - 15T)
GZ	Greaseable Non Standard Flange, SAE “C” Shaft (1-1/4" - 14T)
GR	Greaseable Chelsea Special (Cloverleaf), SAE “B” Shaft (7/8" - 13T)
GY	Greaseable ISO 7653 Pump Mount DIN 5462 Shaft

Assembly

[1] Includes mounting parts
[4] Available only on 221*CAK and 221*EAK
[21] Includes installation kit, console sold separately

Parker Hannifin Corporation
Chelsea Products Division
Olive Branch, MS 38654 USA

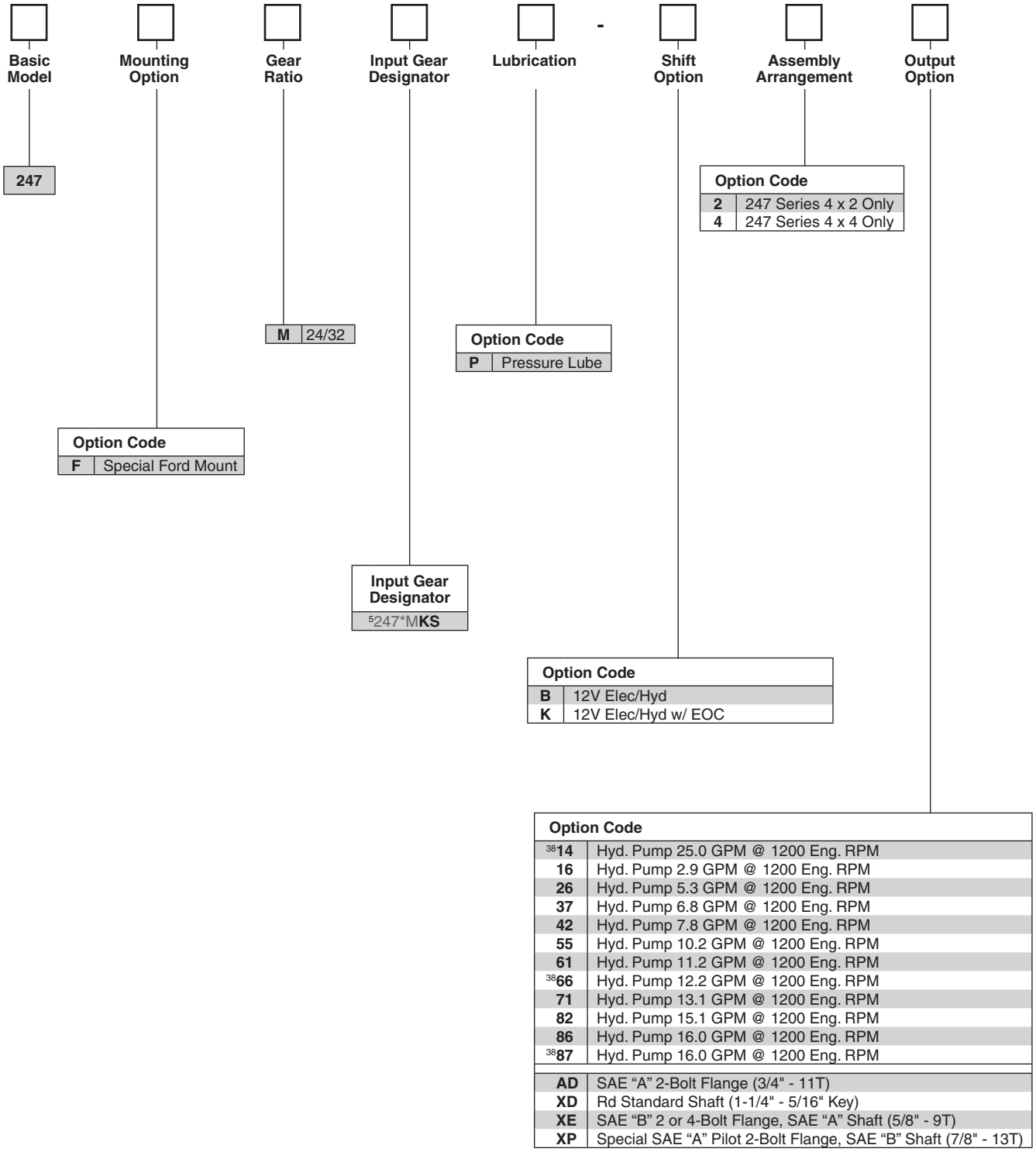

Option Code	
[38]14	Hyd. Pump 25.0 GPM @ 1200 Eng. RPM
16	Hyd. Pump 2.9 GPM @ 1200 Eng. RPM
26	Hyd. Pump 5.3 GPM @ 1200 Eng. RPM
37	Hyd. Pump 6.8 GPM @ 1200 Eng. RPM
42	Hyd. Pump 7.8 GPM @ 1200 Eng. RPM
55	Hyd. Pump 10.2 GPM @ 1200 Eng. RPM
61	Hyd. Pump 11.2 GPM @ 1200 Eng. RPM
[38]66	Hyd. Pump 12.2 GPM @ 1200 Eng. RPM
71	Hyd. Pump 13.1 GPM @ 1200 Eng. RPM
82	Hyd. Pump 15.1 GPM @ 1200 Eng. RPM
86	Hyd. Pump 16.0 GPM @ 1200 Eng. RPM
[38]87	Hyd. Pump 16.0 GPM @ 1200 Eng. RPM
AD	SAE “A” 2-Bolt Flange (3/4" - 11T)
XD	Rd Standard Shaft (1-1/4" - 5/16" Key)
XE	SAE “B” 2 or 4-Bolt Flange, SAE “A” Shaft (5/8" - 9T)
XP	Special SAE “A” Pilot 2-Bolt Flange, SAE “B” Shaft (7/8" - 13T)

Assembly

❺ Automatically pressure lubed
㊳ 4 x 2 Vehicles Only

NOTE: Pump displacement is theoretical.

Parker Hannifin Corporation
Chelsea Products Division
Olive Branch, MS 38654 USA

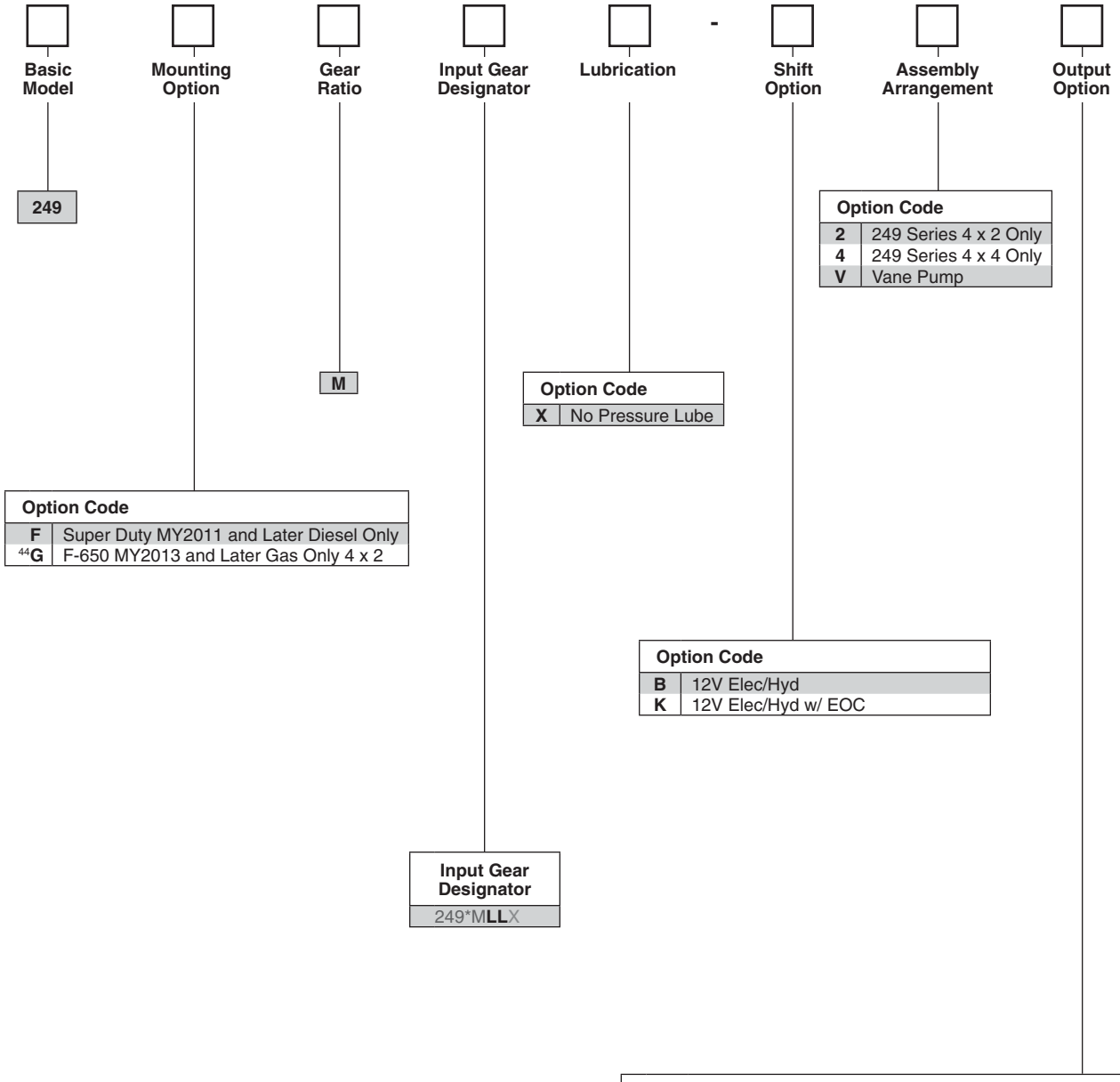

Option Code	
F	Super Duty MY2011 and Later Diesel Only
[44]G	F-650 MY2013 and Later Gas Only 4 x 2

Option Code	
X	No Pressure Lube

Option Code	
2	249 Series 4 x 2 Only
4	249 Series 4 x 4 Only
V	Vane Pump

Option Code	
B	12V Elec/Hyd
K	12V Elec/Hyd w/ EOC

Input Gear Designator
249*M**LL**X

Option Code	
08	Hyd. Pump 12.0 GPM @ 1200 Eng. RPM
09	Hyd. Pump 14.0 GPM @ 1200 Eng. RPM
11	Hyd. Pump 16.0 GPM @ 1200 Eng. RPM
15	Hyd. Pump 18.9 GPM @ 1200 Eng. RPM
16	Hyd. Pump 2.4 GPM @ 1200 Eng. RPM
26	Hyd. Pump 3.9 GPM @ 1200 Eng. RPM
32	Hyd. Pump 4.7 GPM @ 1200 Eng. RPM
37	Hyd. Pump 5.5 GPM @ 1200 Eng. RPM
42	Hyd. Pump 6.3 GPM @ 1200 Eng. RPM
55	Hyd. Pump 8.2 GPM @ 1200 Eng. RPM
61	Hyd. Pump 9.0 GPM @ 1200 Eng. RPM
71	Hyd. Pump 10.6 GPM @ 1200 Eng. RPM
82	Hyd. Pump 12.2 GPM @ 1200 Eng. RPM
87	Hyd. Pump 12.9 GPM @ 1200 Eng. RPM
AD	SAE “A” 2-Bolt Flange (3/4" - 11T)
XD	Rd Standard Shaft (1-1/4" - 5/16" Key)
XP	Special SAE “A” 2-Bolt Flange, SAE “B” Shaft (7/8" - 13T)
V12	B12 Cartridge @ 2.26 in^3/rev
V14	B14 Cartridge @ 2.81 in^3/rev
V17	B17 Cartridge @ 3.56 in^3/rev
V20	B20 Cartridge @ 3.89 in^3/rev
V22	B22 Cartridge @ 4.29 in^3/rev

[44] Includes Heat Shield and Wiring Harness

NOTE: Pump displacement is theoretical.

Assembly

Parker Hannifin Corporation
Chelsea Products Division
Olive Branch, MS 38654 USA

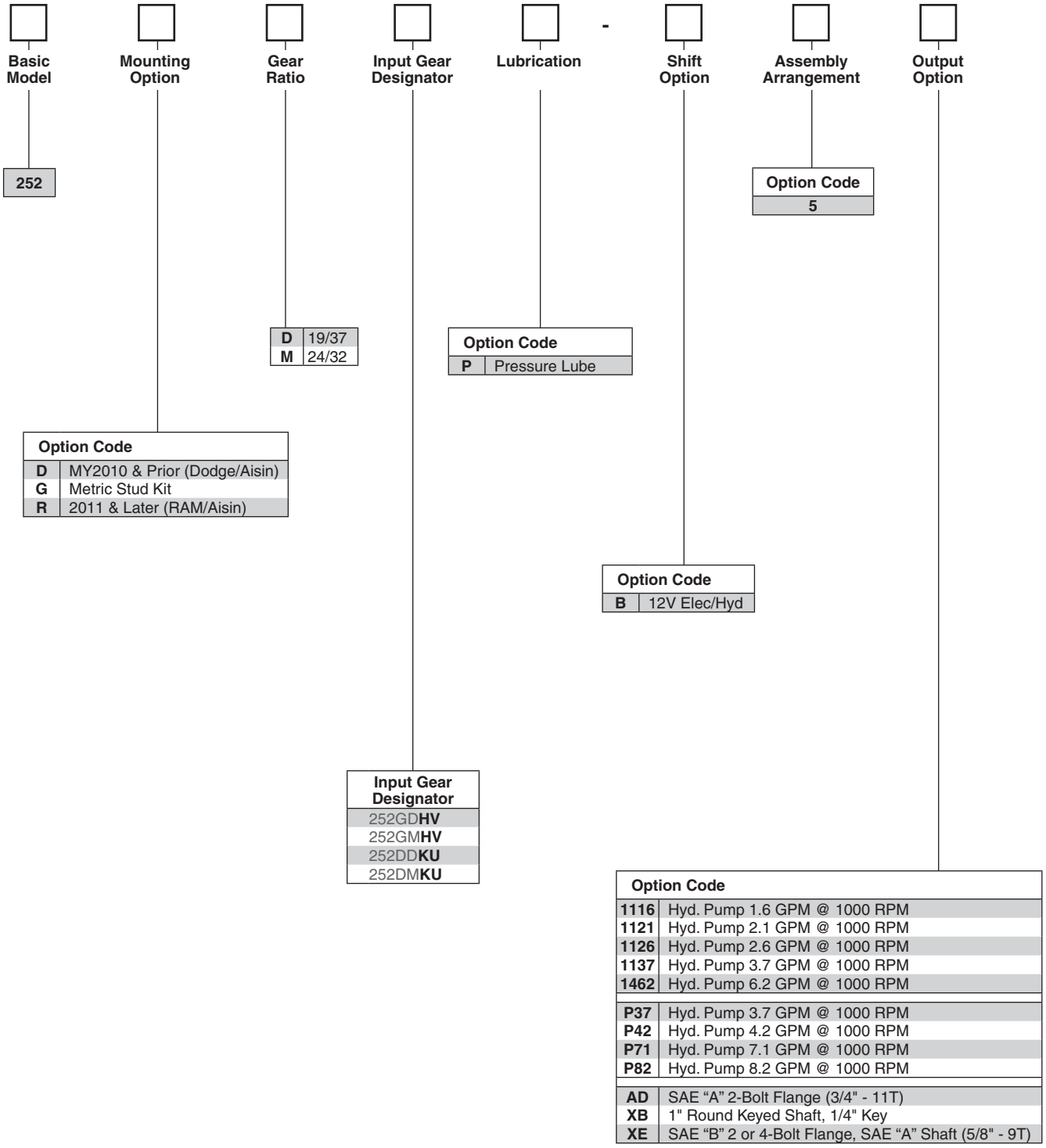

NOTE: Pump displacement is theoretical.

Parker Hannifin Corporation
Chelsea Products Division
Olive Branch, MS 38654 USA

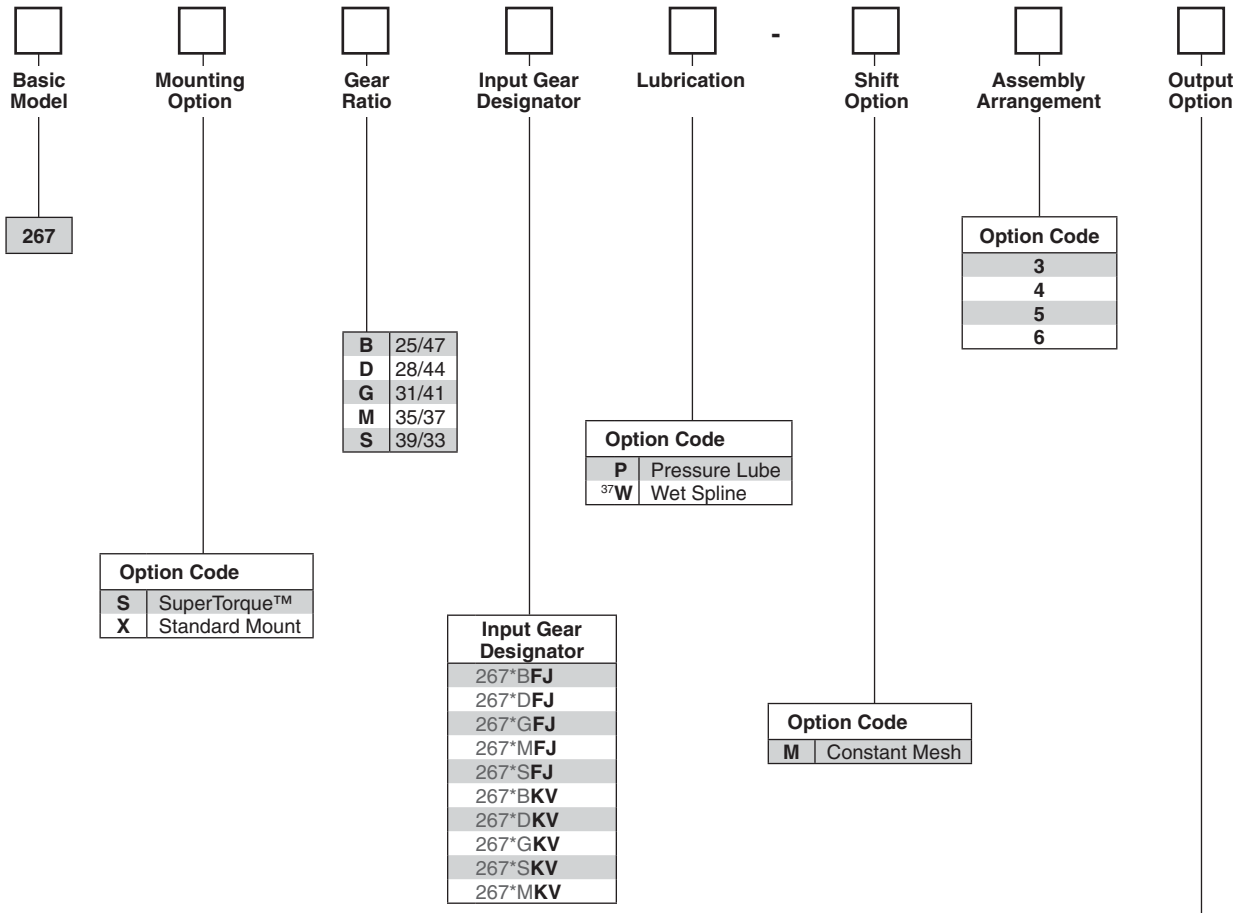

Option Code	
AF	SAE “B” 2 or 4-Bolt Flange, SAE “BB” Shaft (1" - 15T)
AK	SAE “B” 2-Bolt Flange, SAE “B” Shaft (7/8" - 13T)
AZ	Non Standard Flange, SAE “C” Shaft (1-1/4" - 14T)
XD	Rd Standard Shaft (1-1/4" - 5/16" Key)
XE	SAE “B” 2 or 4-Bolt Flange, SAE “A” Shaft (5/8" - 9T)
[13]**XK**	SAE “B” 2 or 4-Bolt Flange, SAE “B” Shaft (7/8" - 13T)
XQ	SAE “B” 2 or 4-Bolt Flange, SAE “B” Shaft (7/8" - 13T)
XR	Chelsea Special (Cloverleaf), SAE “B” Shaft (7/8" - 13T)
XX	1-1/4" Tapered Output Shaft w/ Keyway
XY	ISO 7653 Pump Mount DIN 5462 Shaft
RC	Rotatable SAE “A” 2-Bolt Flange, SAE “A” Shaft (5/8" - 9T)
RA	Rotatable SAE “B” 2-Bolt Flange, SAE “B” Shaft (7/8" - 13T)
RF	Rotatable SAE “B” 2-Bolt Flange, SAE “BB” Shaft (1" - 15T)
RB	Rotatable SAE “B” 4-Bolt Flange, SAE “B” Shaft (7/8" - 13T)
RJ	Rotatable SAE “B” 2 or 4-Bolt Flange, SAE “BB” Shaft (1" - 15T)
[23]**RY**	Rotatable ISO 7653 Pump Mount DIN 5462 Shaft
GA	Greaseable SAE “B” 2-Bolt Rotatable Flange, SAE “B” Shaft (7/8" - 13T)
GH	Greaseable SAE “B” 2-Bolt Rotatable Flange, SAE “BB” Shaft (1" - 15T)
GB	Greaseable SAE “B” 4-Bolt Rotatable Flange, SAE “B” Shaft (7/8" - 13T)
GK	Greaseable SAE “B” 2 or 4-Bolt Flange, SAE “B” Shaft (7/8" - 13T)
GQ	Greaseable SAE “B” 2 or 4-Bolt Flange, SAE “B” Shaft (7/8" - 13T)
GF	Greaseable SAE “B” 2 or 4-Bolt Flange, SAE “BB” Shaft (1" - 15T)
GZ	Greaseable Non Standard Flange, SAE “C” Shaft (1-1/4" - 14T)
GR	Greaseable Chelsea Special (Cloverleaf), SAE “B” Shaft (7/8" - 13T)
GY	Greaseable ISO 7653 Pump Mount DIN 5462 Shaft

[13] Available assembly “5” only
[23] Must be purchased with Wet Spline
[37] Automatically Pressure Lubed with Wet Spline

Parker Hannifin Corporation
Chelsea Products Division
Olive Branch, MS 38654 USA

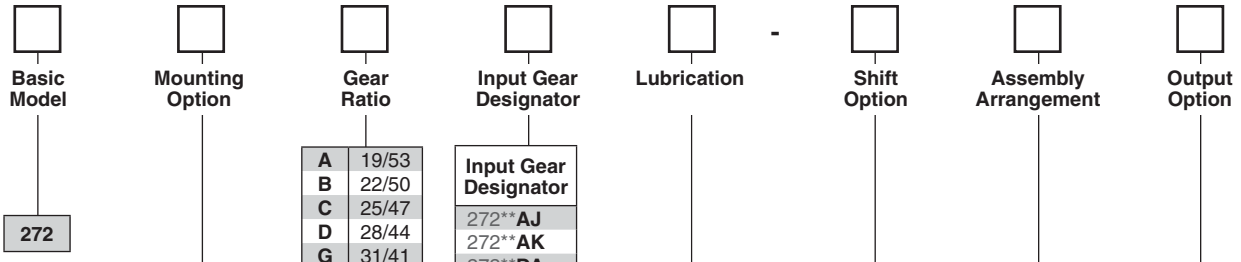

Gear Ratio	
A	19/53
B	22/50
C	25/47
D	28/44
G	31/41
K	33/39
M	35/37
P	37/35
S	39/33

Input Gear Designator
272**AJ
272**AK
272**DA
272**ES
272**FN
272**HV
272**JK
272**JW
272**KN
272**KU

Option Code	
X	Standard Mount
G	Standard Mount w/ Metric Studs
Z	Deep Mount
M	Low-Profile
N	Low-Profile w/ Metric Studs
A	Aisin Only (Non-Dodge/Ram)
D	Dodge/Aisin
R	RAM/Aisin

Option Code	
P	Pressure Lube
[5]R	Valve Cap Rotated 120 Degrees
[5]S	Valve Cap Rotated 240 Degrees
[5]W	Wet Spline
X	No Pressure Lube
[5]V	Valve Cap Rotated 120 Degrees w/ Wet Spline
[5]Y	Valve Cap Rotated 240 Degrees w/ Wet Spline

Option Code	
HYD	
B	12V Elec/Hyd
D	24V Elec/Hyd
E	12V Elec/Hyd w/o Installation Kit
N	24V Elec/Hyd w/o Installation Kit
K	12V Elec/Hyd w/ EOC
L	24V Elec/Hyd w/ EOC
G	12V Elec/Hyd Remote Valve w/o EOC
H	24V Elec/Hyd Remote Valve w/o EOC
AIR	
A	Manual Air Shift
V	Manual Air Shift w/o Installation Kit
1	12V Elec/Air
2	24V Elec/Air
J	12V Elec/Air w/ EOC
3	24V Elec/Air w/ EOC
P	12V Elec/Air Remote
Q	24V Elec/Air Remote
R	12V Elec/Air Remote w/ EOC
4	24V Elec/Air Remote w/ EOC

Option Code	
3	Gear Forward, Shaft Rear, Bulge Up Left Side, Bulge Down Right Side
5	Gear Forward, Shaft Rear, Bulge Up Right Side, Bulge Down Left Side

Option Code	
AB	DIN 120 Flange
AC	DIN 100 Flange
BA	1410 Flange w/ Brake
BD	1-1/4" Round Shaft w/ Drag Brake
UN	UNI 8953 3-Bolt Pump Flange - 6T
XD	Rd Standard Shaft (1-1/4" - 5/16" Key)
XV	1410 Series Companion Flange
RF	Rotatable SAE "B" 2-Bolt Flange, SAE "BB" Shaft (1" - 15T)
RZ	Rotatable SAE "B" 2 or 4-Bolt Pump Flange, SAE "C" Shaft (1-1/4" - 14T)
RK	Rotatable SAE "B" 2 or 4-Bolt Pump Mount, SAE "B" Shaft (7/8" - 13T)
RS	Rotatable SAE "C" 2 or 4-Bolt Pump Mount, SAE "C" Shaft (1-1/4" - 14T)
RY	Rotatable ISO 7653 Pump Mount DIN 5462 Shaft

❺ Automatically pressure lubed

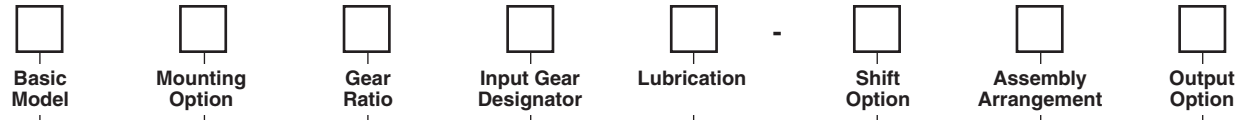

Basic Model
280

Option Code
3
5
8

	3 & 5 Ass'y	8 Ass'y
B	–	23/53
C	25/47	25/50
D	28/44	28/47
G	31/41	31/44
K	33/39	–
M	35/37	35/40
P	37/35	37/38
S	39/33	39/36
T	41/31	42/33

Option Code	
[46]B	12V Elec/Hyd
[46]D	24V Elec/Hyd
[46]N	24V Elec/Hyd w/o Installation Kit
[46]K	12V Elec/Hyd w/ EOC
[46]L	24V Elec/Hyd w/ EOC
[15]G	12V Elec/Hyd Valve - Remote
[15]H	24V Elec/Hyd Valve - Remote
[46]E	12V Elec/Hyd w/o Installation Kit
[21, 46]S	Air Shift w/ PTO/Dump Pump Combo Valve w/ Kick Out w/ Neutral Spring Return
[21, 46]T	Air Shift w/ PTO/Dump Pump Combo Valve w/o Kick Out w/ Neutral Spring Return

Option Code	
G	Standard Mount 10-Bolt

Option Code	
P	Pressure Lube
[45]R	Valve Body Rotated 120 Degrees
S	Valve Body Rotated 240 Degrees
Y	Valve Body Rotated 240 Degrees w/ Wet Spline
[45]V	Valve Body Rotated 120 Degrees w/ Wet Spline
W	Wet Spline

Input Gear Designator
280**FJ
280**KV

Option Code	
AB	DIN 120 Flange
AC	DIN 100 Flange
BA	1410 Flange w/ Drag Brake
BD	Rd Standard Shaft (1-1/4" - 5/16" Key) w/ Drag Brake
XD	Rd Standard Shaft (1-1/4" - 5/16" Key)
XV	1410 Series Companion Flange
SD	Rd Standard Shaft (1-1/4" - 5/16" Key) w/ Smart Start
SV	1410 Series Companion Flange w/ Smart Start
[47]RF	Rotatable SAE "B" 2-Bolt Flange, SAE "BB" Shaft (1" - 15T)
[47]RZ	Rotatable SAE "B" 2 or 4-Bolt Pump Mount, SAE "B" (7/8" - 13T)
[47]RK	Rotatable SAE "B" 2 or 4-Bolt Pump Mount, SAE "B" Shaft (7/8" - 13T)
[47]RS	Rotatable SAE "C" 2 or 4-Bolt Pump Mount, SAE "C" Shaft (1-1/4" - 14T)
[47]RY	Rotatable ISO 7653 Pump Mount DIN 5462 Shaft

Assembly

[15] The remote mount solenoid option cannot utilize the EOC option
[21] Includes installation kit, console sold separately
[45] Available on shift option B, D, K, L, M, N, S & T
[46] Available with Rotated Valve
[47] Available with Wet Spline

Parker Hannifin Corporation
Chelsea Products Division
Olive Branch, MS 38654 USA

Assembly

Basic Model	Mounting Option	Gear Ratio	Input Gear Designator	Lubrication	-	Shift Option	Assembly Arrangement	Output Option
282								

Input Gear Designator
282**AJ
282**AK
282**DA
282**ES
282**FN
282**HV
282**JK
282**JW
282**KU

Gear Ratio	
B	22/50
C	25/47
D	28/44
G	31/41
K	33/39
M	35/37
P	37/35
S	39/33
T	41/31

Option Code	
X	Standard Mount
G	Standard Mount w/ Metric Studs

Option Code	
P	Pressure Lube
[5]R	Valve Cap Rotated 120 Degrees
[5]S	Valve Cap Rotated 240 Degrees
[5]W	Wet Spline
X	No Pressure Lube
[5]V	Valve Cap Rotated 120 Degrees w/ Wet Spline
[5]Y	Valve Cap Rotated 240 Degrees w/ Wet Spline

Option Code	
HYD	
B	12V Elec/Hyd
D	24V Elec/Hyd
E	12V Elec/Hyd w/o Installation Kit
N	24V Elec/Hyd w/o Installation Kit
K	12V Elec/Hyd w/ EOC
L	24V Elec/Hyd w/ EOC
G	12V Elec/Hyd Remote Valve w/o EOC
H	24V Elec/Hyd Remote Valve w/o EOC
AIR	
A	Manual Air Shift
V	Manual Air Shift w/o Installation Kit
1	12V Elec/Air
2	24V Elec/Air
J	12V Elec/Air w/ EOC
3	24V Elec/Air w/ EOC
P	12V Elec/Air Remote
Q	24V Elec/Air Remote
R	12V Elec/Air Remote w/ EOC
4	24V Elec/Air Remote w/ EOC

Option Code	
3	Gear Forward/Shaft Rear: Left Side - Bulge Up, Right Side - Bulge Down
5	Gear Forward/Shaft Rear: Right Side - Bulge Up, Left Side - Bulge Down

Option Code	
AB	DIN 120 Flange
AC	DIN 100 Flange
BA	1410 Companion Flange w/ Brake
BD	1-1/4" Round Shaft w/ Drag Brake
UN	UNI 8953 3-Bolt Pump Flange - 6T
XD	Rd Standard Shaft (1-1/4" - 5/16" Key)
XV	1410 Series Companion Flange
RZ	Rotatable SAE “B” 2 or 4-Bolt Pump Flange, SAE “C” Shaft (1-1/4" - 14T)
RF	Rotatable SAE “B” 2-Bolt Flange, SAE “BB” Shaft (1" - 15T)
RK	Rotatable SAE “B” 2 or 4-Bolt Pump Mount, SAE “B” Shaft (7/8" - 13T)
RS	Rotatable SAE “C” 2 or 4-Bolt Pump Mount, SAE “C” Shaft (1-1/4" - 14T)
RY	Rotatable ISO 7653 Pump Mount DIN 5462 Shaft

[5] Automatically pressure lubed

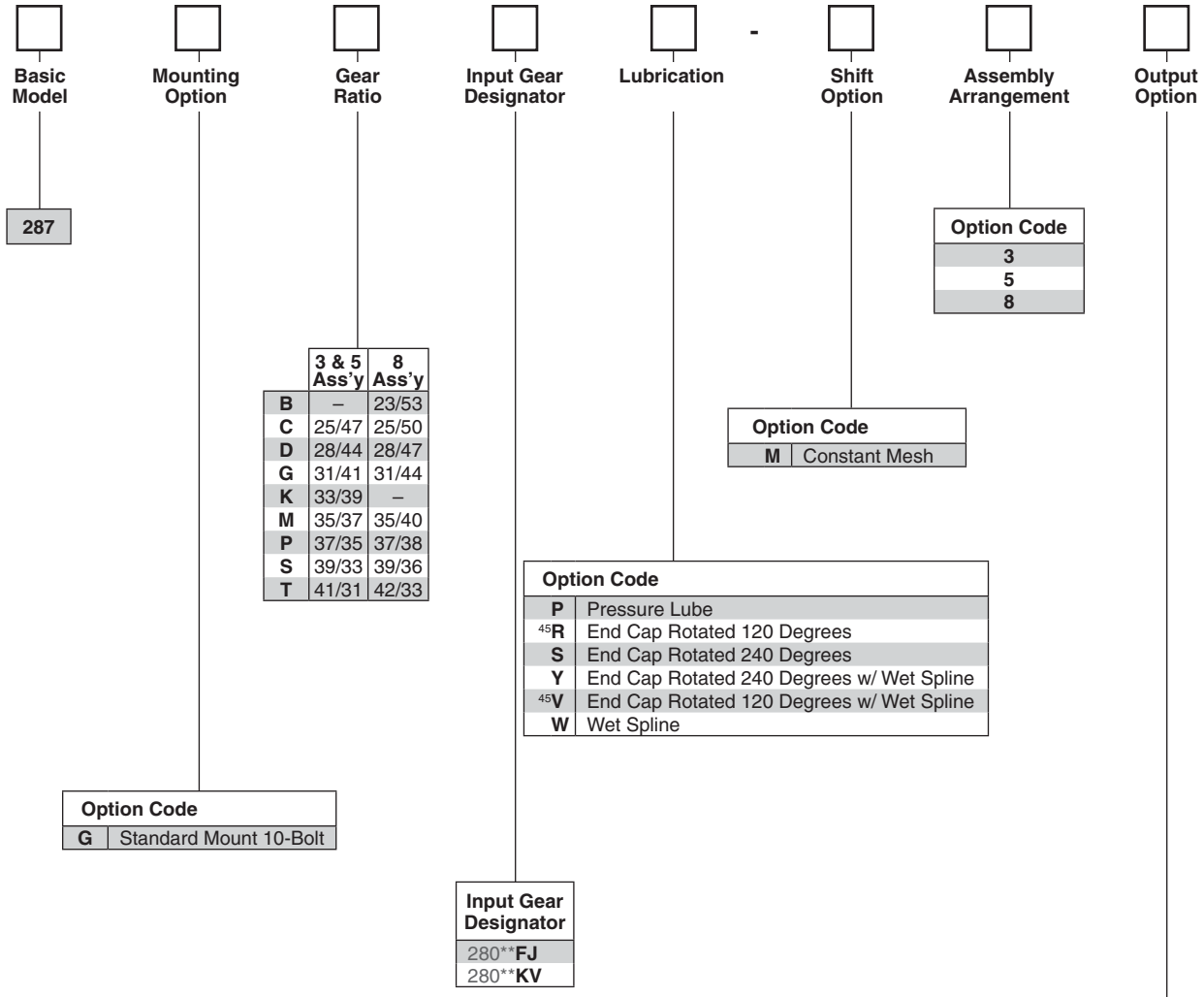

Option Code
3
5
8

	3 & 5 Ass'y	8 Ass'y
B	–	23/53
C	25/47	25/50
D	28/44	28/47
G	31/41	31/44
K	33/39	–
M	35/37	35/40
P	37/35	37/38
S	39/33	39/36
T	41/31	42/33

Option Code	
M	Constant Mesh

Option Code	
P	Pressure Lube
[45]R	End Cap Rotated 120 Degrees
S	End Cap Rotated 240 Degrees
Y	End Cap Rotated 240 Degrees w/ Wet Spline
[45]V	End Cap Rotated 120 Degrees w/ Wet Spline
W	Wet Spline

Option Code	
G	Standard Mount 10-Bolt

Input Gear Designator
280**FJ
280**KV

Option Code	
AB	DIN 120 Flange
AC	DIN 100 Flange
XD	Rd Standard Shaft (1-1/4" - 5/16" Key)
XV	1410 Series Companion Flange
[47]RF	Rotatable SAE "B" 2-Bolt Flange, SAE "BB" Shaft (1" - 15T)
[47]RZ	Rotatable SAE "B" 2 or 4-Bolt Pump Mount, SAE "B" (7/8" - 13T)
[47]RK	Rotatable SAE "B" 2 or 4-Bolt Pump Mount, SAE "B" Shaft (7/8" - 13T)
[47]RS	Rotatable SAE "C" 2 or 4-Bolt Pump Mount, SAE "C" Shaft (1-1/4" - 14T)
[47]RY	Rotatable ISO 7653 Pump Mount DIN 5462 Shaft

[15] The remote mount solenoid option cannot utilize the EOC option
[21] Includes installation kit, console sold separately
[45] Available on shift option B, D, K, L, M, N, S & T
[46] Available with Rotated Valve
[47] Available with Wet Spline

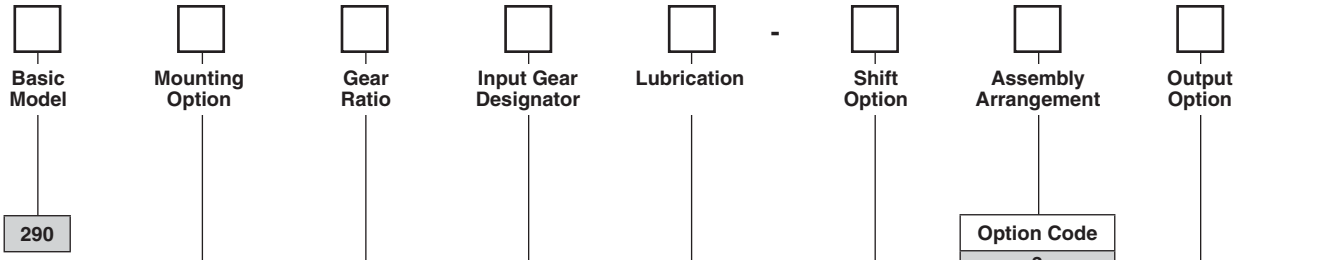

Option Code	
X	Standard Mount
K	Standard Mount w/o Stud Kit
G	Standard Mount w/ Metric Studs

F	29/37
L	31/34
Q	29/34
U	29/20

Option Code	
X	No Pressure Lube

Option Code
3
4
5
6

Option Code	
[1]A	Air Shift
[1]P	12V Elec/Air Shift
V	Air Shift w/o Installation Kit
[21]S	Air Shift w/ PTO/Dump Pump Combo Valve w/ Kick Out w/ Neutral Spring Return
[21]T	Air Shift w/ PTO/Dump Pump Combo Valve w/o Kick Out w/ Neutral Spring Return
[21]U	Air Shift w/ PTO/Dump Pump Combo Valve w/ Kick Out w/o Neutral Spring Return

Input Gear Designator	Input Gear Part Number
290*F**HU**	5-P-1221
290*F**HZ**	5-P-1238
290*L**HZ**	5-P-1239
290*Q**GE**	5-P-992
290*Q**GF**	5-P-993
290*Q**HU**	5-P-1223
290*Q**HZ**	5-P-1240
290*Q**JJ**	5-P-1258
290*U**GE**	5-P-1136
290*U**HZ**	5-P-1241

Option Code	
AF	SAE “B” 2 or 4-Bolt Flange, SAE “BB” Shaft (1" - 15T)
AK	SAE “B” 2-Bolt Flange, SAE “B” Shaft (7/8" - 13T)
XD	Rd Standard Shaft (1-1/4" - 5/16" Key)
XE	SAE “B” 2 or 4-Bolt Flange, SAE “A” Shaft (5/8" - 9T)
XK	SAE “B” 2 or 4-Bolt Flange, SAE “B” Shaft (7/8" - 13T)
XR	Chelsea Special (Cloverleaf), SAE “B” Shaft (7/8" - 13T)
XX	1-1/4" Tapered Output Shaft w/ Keyway
XY	ISO 7653 Pump Mount DIN 5462 Shaft
RC	Rotatable SAE “A” 2-Bolt Flange, SAE “A” Shaft (5/8" - 9T)
RA	Rotatable SAE “B” 2-Bolt Flange, SAE “B” Shaft (7/8" - 13T)
RF	Rotatable SAE “B” 2-Bolt Flange, SAE “BB” Shaft (1" - 15T)
RB	Rotatable SAE “B” 4-Bolt Flange, SAE “B” Shaft (7/8" - 13T)
RE	Rotatable SAE “B” 4-Bolt Flange, SAE “BB” Shaft (1" - 15T)
RY	Rotatable ISO 7653 Pump Mount DIN 5462 Shaft

[1] Includes mounting parts
[21] Includes installation kit, console sold separately

Parker Hannifin Corporation
Chelsea Products Division
Olive Branch, MS 38654 USA

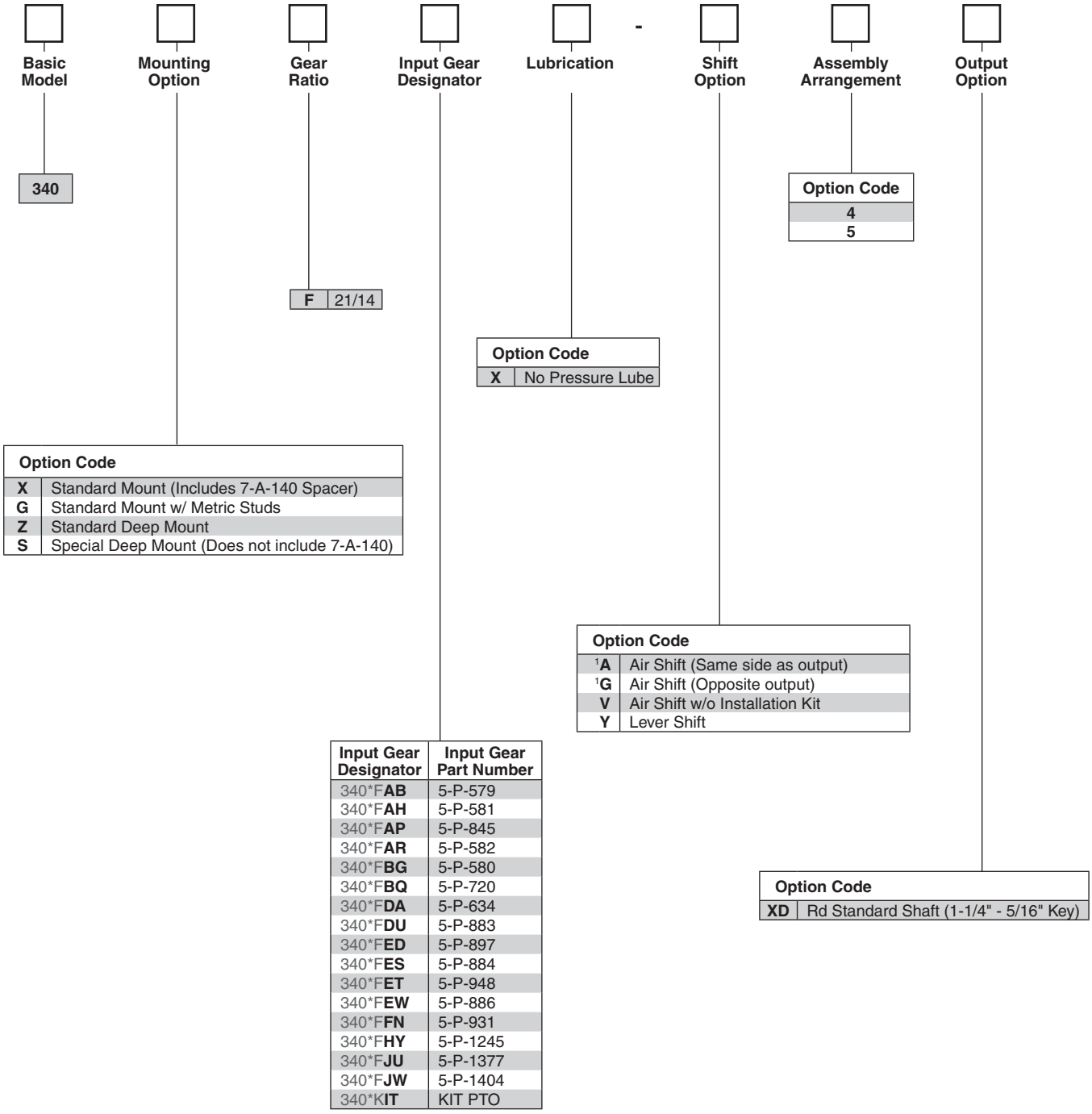

Input Gear Designator	Input Gear Part Number
340*F**AB**	5-P-579
340*F**AH**	5-P-581
340*F**AP**	5-P-845
340*F**AR**	5-P-582
340*F**BG**	5-P-580
340*F**BQ**	5-P-720
340*F**DA**	5-P-634
340*F**DU**	5-P-883
340*F**ED**	5-P-897
340*F**ES**	5-P-884
340*F**ET**	5-P-948
340*F**EW**	5-P-886
340*F**FN**	5-P-931
340*F**HY**	5-P-1245
340*F**JU**	5-P-1377
340*F**JW**	5-P-1404
340*K**IT**	KIT PTO

Assembly

❶ Includes mounting parts

Parker Hannifin Corporation
Chelsea Products Division
Olive Branch, MS 38654 USA

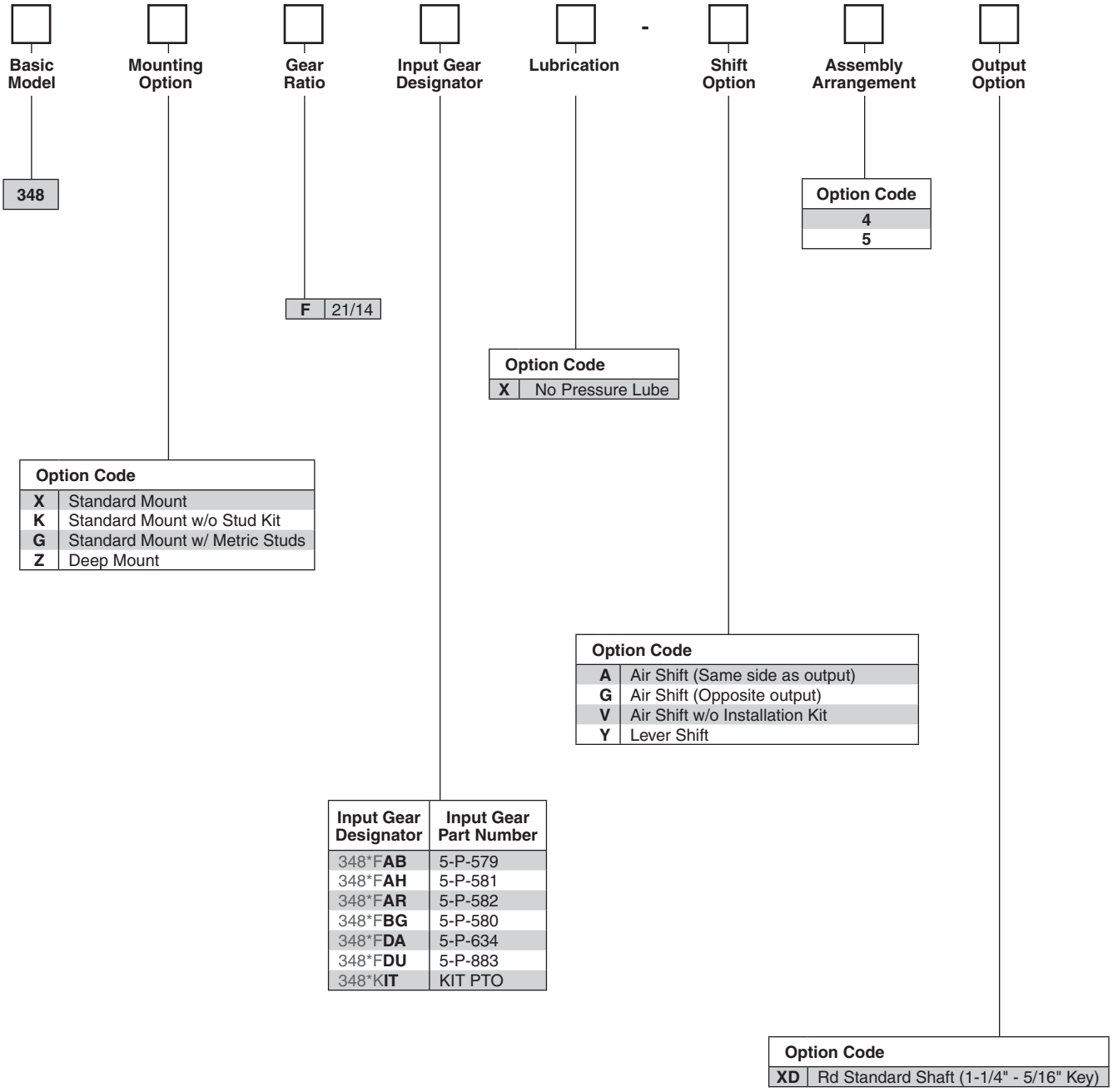

Assembly

Parker Hannifin Corporation
Chelsea Products Division
Olive Branch, MS 38654 USA

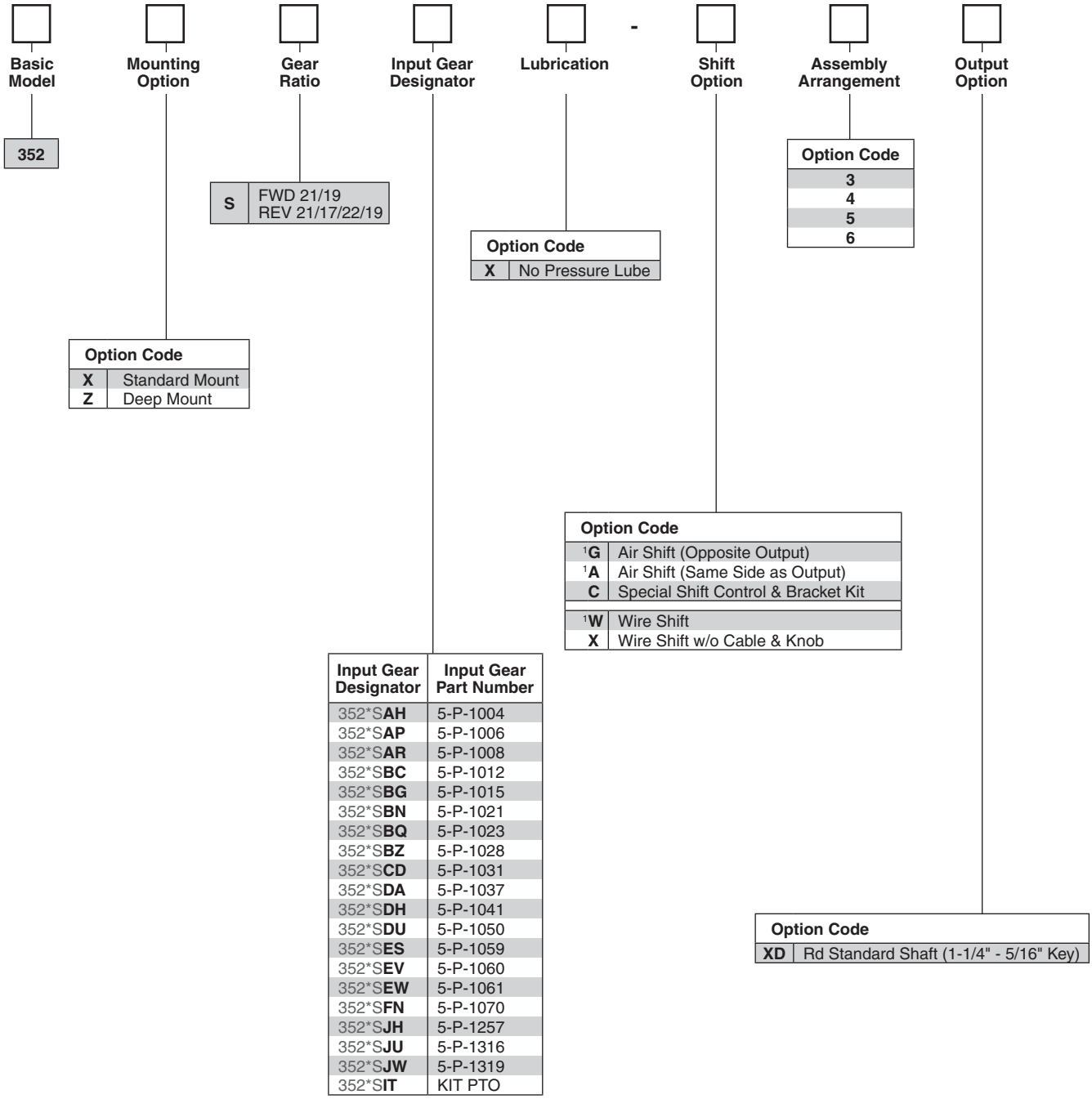

Input Gear Designator	Input Gear Part Number
352*S**AH**	5-P-1004
352*S**AP**	5-P-1006
352*S**AR**	5-P-1008
352*S**BC**	5-P-1012
352*S**BG**	5-P-1015
352*S**BN**	5-P-1021
352*S**BQ**	5-P-1023
352*S**BZ**	5-P-1028
352*S**CD**	5-P-1031
352*S**DA**	5-P-1037
352*S**DH**	5-P-1041
352*S**DU**	5-P-1050
352*S**ES**	5-P-1059
352*S**EV**	5-P-1060
352*S**EW**	5-P-1061
352*S**FN**	5-P-1070
352*S**JH**	5-P-1257
352*S**JU**	5-P-1316
352*S**JW**	5-P-1319
352*S**IT**	KIT PTO

Assembly

❶ Includes mounting parts

Parker Hannifin Corporation
Chelsea Products Division
Olive Branch, MS 38654 USA

Assembly

Basic Model	Mounting Option	Gear Ratio	Input Gear Designator	Lubrication	-	Shift Option	Assembly Arrangement	Output Option
442								

Gear Ratio	
A	14/39
C	17/37
F	21/37
H	23/35
L	25/34
Q	19/24
R	22/24
S	24/22
U	26/20
W	26/17
X	38/21

Lubrication Option Code	
P	Pressure Lube
X	No Pressure Lube

Assembly Arrangement Option Code
3
4
5
6

Shift Option Code	
[1]A	Air Shift
V	Air Shift w/o Installation Kit
[1]P	12V Elec/Air Shift
[21]S	Air Shift w/ PTO/Dump Pump Combo Valve w/ Kick Out w/ Neutral Spring Return
[21]T	Air Shift w/ PTO/Dump Pump Combo Valve w/o Kick Out w/ Neutral Spring Return
[21]U	Air Shift w/ PTO/Dump Pump Combo Valve w/ Kick Out w/o Neutral Spring Return
[1]W	Wire Shift
X	Wire Shift w/o Cable
M	Constant Mesh
H	No Shift Assembly
C	Special Shift Control & Bracket Kit

Mounting Option Code	
X	Standard Mount
K	Standard Mount w/o Stud Kit
G	Standard Mount w/ Metric Studs
Z	Deep Mount
L	Deep Mount w/o Stud Kit

Input Gear Designator	Input Gear Part Number	Input Gear Designator	Input Gear Part Number
442**AB	5-P-1001	442*CAH	5-P-1287
442**AH	5-P-1004	442*CAP	5-P-1289
442**AR	5-P-1008	442*CAR	5-P-1290
442**BG	5-P-1015	442*CDA	5-P-1291
442**BQ	5-P-1023	442*CES	5-P-1292
442**DA	5-P-1037	442*FAB	5-P-1076
442**DU	5-P-1050	442*FAH	5-P-1077
442**ES	5-P-1059	442*FAR	5-P-1080
442**EV	5-P-1060	442*FBC	5-P-1081
442**EW	5-P-1061	442*FBG	5-P-1082
442**FC	5-P-1064	442*FBQ	5-P-1084
442**FN	5-P-1070	442*FDA	5-P-1085
442**GR	5-P-1157	442*FDU	5-P-1088
442**GS	5-P-1152	442*FED	5-P-1090
442**GZ	5-P-1185	442*FES	5-P-1092
442**HH	5-P-1193	442*FEV	5-P-1094
442**HL	5-P-1196	442*FEW	5-P-1095
442**HQ	5-P-1200	442*FFN	5-P-1097
442**HY	5-P-1237	442*FGS	5-P-1151
442**JE	5-P-1249	442*FHV	5-P-1300
442**JG	5-P-1256	442*FJU	5-P-1317
442**JH	5-P-1257	442*FJW	5-P-1320
442**JK	5-P-1261	442*HAH	5-P-1364
442**JU	5-P-1316	442*HDA	5-P-1365
442**JW	5-P-1319	442*AIT	KIT PTO
442**KH	5-P-1343	442*CIT	KIT PTO
442*AAB	5-P-1279	442*FIT	KIT PTO
442*AAH	5-P-1280	442*HIT	KIT PTO
442*AAP	5-P-1282	442*LIT	KIT PTO
442*AAR	5-P-1283	442*QIT	KIT PTO
442*ADA	5-P-1284	442*RIT	KIT PTO
442*AES	5-P-1285	442*SIT	KIT PTO
442*BAH	5-P-1418	442*UIT	KIT PTO
442*BHV	5-P-1358	442*WIT	KIT PTO
442*CAB	5-P-1286	442*XIT	KIT PTO

Output Option Code	
AF	SAE “B” 2 or 4-Bolt Flange, SAE “BB” Shaft (1" - 15T)
AK	SAE “B” 2-Bolt Flange, SAE “B” Shaft (7/8" - 13T)
AZ	Non Standard Flange, SAE “C” Shaft (1-1/4" - 14T)
SQ	SAE “B” 4-Bolt Flange, SAE “B” Shaft (7/8" - 13T)
XD	Rd Standard Shaft (1-1/4" - 5/16" Key)
XE	SAE “B” 2 or 4-Bolt Flange, SAE “A” Shaft (5/8" - 9T)
XK	SAE “B” 2 or 4-Bolt Flange, SAE “B” Shaft (7/8" - 13T)
[59]XQ	SAE “B” 2 or 4-Bolt Flange, SAE “B” Shaft (7/8" - 13T)
XR	Chelsea Special (Cloverleaf), SAE “B” Shaft (7/8" - 13T)
XX	1-1/4" Tapered Output Shaft w/ Keyway
XY	ISO 7653 Pump Mount DIN 5462 Shaft
RC	Rotatable SAE “A” 2-Bolt Flange, SAE “A” Shaft (5/8" - 9T)
RD	Rotatable SAE “A” 2-Bolt Flange, SAE “B” Shaft (7/8" - 13T)
RA	Rotatable SAE “B” 2-Bolt Flange, SAE “B” Shaft (7/8" - 13T)
RF	Rotatable SAE “B” 2-Bolt Flange, SAE “BB” Shaft (1" - 15T)
RB	Rotatable SAE “B” 4-Bolt Flange, SAE “B” Shaft (7/8" - 13T)
RE	Rotatable SAE “B” 4-Bolt Flange, SAE “BB” Shaft (1" - 15T)
RY	Rotatable ISO 7653 Pump Mount DIN 5462 Shaft
GA	Greaseable SAE “B” 2-Bolt Rotatable Flange, SAE “B” Shaft (7/8" - 13T)
GH	Greaseable SAE “B” 2-Bolt Rotatable Flange, SAE “BB” Shaft (1" - 15T)
GB	Greaseable SAE “B” 4-Bolt Rotatable Flange, SAE “B” Shaft (7/8" - 13T)
GK	Greaseable SAE “B” 2 or 4-Bolt Flange, SAE “B” Shaft (7/8" - 13T)
GQ	Greaseable SAE “B” 2 or 4-Bolt Flange, SAE “B” Shaft (7/8" - 13T)
GF	Greaseable SAE “B” 2 or 4-Bolt Flange, SAE “BB” Shaft (1" - 15T)
GZ	Greaseable Non Standard Flange, SAE “C” Shaft (1-1/4" - 14T)
GR	Greaseable Chelsea Special (Cloverleaf), SAE “B” Shaft (7/8" - 13T)
GY	Greaseable ISO 7653 Pump Mount DIN 5462 Shaft

[1] Includes mounting parts
[21] Includes installation kit, console sold separately
[59] Same as “XK” except rotated 90°

Parker Hannifin Corporation
Chelsea Products Division
Olive Branch, MS 38654 USA

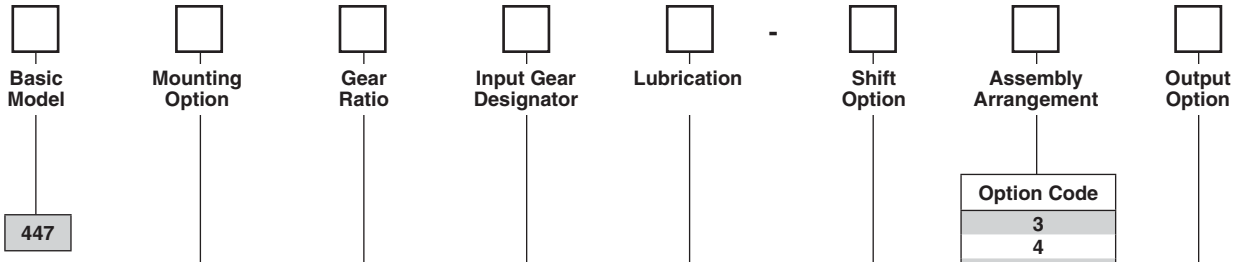

Option Code
3
4
5
6

Q	19/24
S	24/22
U	26/20
W	26/17

Option Code	
P	Pressure Lube
X	No Pressure Lube

Option Code	
G	Standard Mount w/ Metric Studs
K	Standard Mount w/o Stud Kit
L	Deep Mount w/o Stud Kit
X	Standard Mount
Z	Deep Mount

Input Gear Designator	Input Gear Part Number
447*Q**ES**	5-P-869
447*Q**ET**	5-P-865
447*S**ES**	5-P-870
447*S**ET**	5-P-866
447*U**ES**	5-P-871
447*U**ET**	5-P-867
447*W**ES**	5-P-872
447AW**FY**	5-P-976
447*W**GP**	5-P-1148
447*Q**IT**	KIT PTO
447*S**IT**	KIT PTO
447*U**IT**	KIT PTO
447*W**IT**	KIT PTO

Option Code	
C	Special Shift Control & Bracket Kit
[1]A	Air Shift
[1]P	12V Elec/Air Shift
[21]S	Air Shift w/ PTO/Dump Pump Combo Valve w/ Kick Out w/ Neutral Spring Return
[21]T	Air Shift w/ PTO/Dump Pump Combo Valve w/o Kick Out w/ Neutral Spring Return
[21]U	Air Shift w/ PTO/Dump Pump Combo Valve w/ Kick Out w/o Neutral Spring Return
V	Air Shift w/o Installation Kit
[1]W	Wire Shift
X	Wire Shift w/o Cable & Knob
H	No Shift Kit
M	Constant Mesh

Option Code	
AF	SAE “B” 2 or 4-Bolt Flange, SAE “BB” Shaft (1" - 15T)
AK	SAE “B” 2-Bolt Flange, SAE “B” Shaft (7/8" - 13T)
AZ	Non Standard Flange, SAE “C” Shaft (1-1/4" - 14T)
XD	Rd Standard Shaft (1-1/4" - 5/16" Key)
XE	SAE “B” 2 or 4-Bolt Flange, SAE “A” Shaft (5/8" - 9T)
XK	SAE “B” 2 or 4-Bolt Flange, SAE “B” Shaft (7/8" - 13T)
[59] XQ	SAE “B” 2 or 4-Bolt Flange, SAE “B” Shaft (7/8" - 13T)
XR	Chelsea Special (Cloverleaf), SAE “B” Shaft (7/8" - 13T)
XX	1-1/4" Tapered Output Shaft w/ Keyway
XY	ISO 7653 Pump Mount DIN 5462 Shaft
RC	Rotatable SAE “A” 2-Bolt Flange, SAE “A” Shaft (5/8" - 9T)
RA	Rotatable SAE “B” 2-Bolt Flange, SAE “B” Shaft (7/8" - 13T)
RF	Rotatable SAE “B” 2-Bolt Flange, SAE “BB” Shaft (1" - 15T)
RB	Rotatable SAE “B” 4-Bolt Flange, SAE “B” Shaft (7/8" - 13T)
RE	Rotatable SAE “B” 4-Bolt Flange, SAE “BB” Shaft (1" - 15T)
RY	Rotatable ISO 7653 Pump Mount DIN 5462 Shaft
GA	Greaseable SAE “B” 2-Bolt Rotatable Flange, SAE “B” Shaft (7/8" - 13T)
GH	Greaseable SAE “B” 2-Bolt Rotatable Flange, SAE “BB” Shaft (1" - 15T)
GB	Greaseable SAE “B” 4-Bolt Rotatable Flange, SAE “B” Shaft (7/8" - 13T)
GK	Greaseable SAE “B” 2 or 4-Bolt Flange, SAE “B” Shaft (7/8" - 13T)
GQ	Greaseable SAE “B” 2 or 4-Bolt Flange, SAE “B” Shaft (7/8" - 13T)
GF	Greaseable SAE “B” 2 or 4-Bolt Flange, SAE “BB” Shaft (1" - 15T)
GZ	Greaseable Non Standard Flange, SAE “C” Shaft (1-1/4" - 14T)
GR	Greaseable Chelsea Special (Cloverleaf), SAE “B” Shaft (7/8" - 13T)
GY	Greaseable ISO 7653 Pump Mount DIN 5462 Shaft

[1] Includes mounting parts
[10] Must use with the 447A PTO for Nissan 1999 and after
[17] Must use with the 447A PTO, for Nissan 1995 through 1998
[21] Includes installation kit, console sold separately
[59] Same as “XK” except rotated 90°

Assembly

Parker Hannifin Corporation
Chelsea Products Division
Olive Branch, MS 38654 USA

Assembly

Basic Model	Mounting Option	Gear Ratio	Input Gear Designator	Lubrication	-	Shift Option	Assembly Arrangement	Output Option
489								

Option Code	
A	14/39
C	17/37
F	21/37
H	23/35
L	25/34
Q	19/24
R	22/24
S	24/22
U	26/20
W	26/17
X	38/21

Option Code	
P	Pressure Lube
X	No Pressure Lube

Option Code
3
4
5
6

Option Code	
X	Standard Mount
G	Standard Mount w/ Metric Stud Kit
K	Standard Mount w/o Stud Kit
Z	Deep Mount
C	CAT TH-55 Mounting

Input Gear Designator	Input Gear Part Number
489**AB	5-P-1001
489**AH	5-P-1004
489**AR	5-P-1008
489**BG	5-P-1015
489**DA	5-P-1037
489**DU	5-P-1050
489**EV	5-P-1060
489*AAB	5-P-1279
489*AAH	5-P-1280
489*AAR	5-P-1283
489*ADA	5-P-1284
489*CAB	5-P-1286
489*CAH	5-P-1287
489*CAR	5-P-1290
489*CDA	5-P-1291
489*FAB	5-P-1076
489*FAH	5-P-1077
489*FAR	5-P-1080
489*FBG	5-P-1082
489*FDA	5-P-1085
489*FDU	5-P-1088
489*FEV	5-P-1094
489*HAH	5-P-1364
489*HDA	5-P-1365
489*AIT	KIT PTO
489*CIT	KIT PTO
489*FIT	KIT PTO
489*HIT	KIT PTO
489*LIT	KIT PTO
489*QIT	KIT PTO
489*RIT	KIT PTO
489*SIT	KIT PTO
489*UIT	KIT PTO
489*WIT	KIT PTO
489*XIT	KIT PTO

Option Code	
[1]A	Air Shift
[1]P	12V Elec/Air Shift
V	Air Shift w/o Installation Kit
[2,1]S	Air Shift w/ PTO/Dump Pump Combo Valve w/ Kick Out w/ Neutral Spring Return
[2,1]T	Air Shift w/ PTO/Dump Pump Combo Valve w/o Kick Out w/ Neutral Spring Return
[2,1]U	Air Shift w/ PTO/Dump Pump Combo Valve w/ Kick Out w/o Neutral Spring Return
[1]W	Wire Shift
X	Wire Shift w/o Cable & Knob
M	Constant Mesh
H	No Shifter Kit
C	Special Shift Control & Bracket Kit

Option Code	
AF	SAE “B” 2 or 4-Bolt Flange, SAE “BB” Shaft (1" - 15T)
AK	SAE “B” 2-Bolt Flange, SAE “B” Shaft (7/8" - 13T)
AZ	Non Standard Flange, SAE “C” Shaft (1-1/4" - 14T)
SQ	SAE “B” 4-Bolt Flange, SAE “B” Shaft (7/8" - 13T)
XD	Rd Standard Shaft (1-1/4" - 5/16" Key)
XE	SAE “B” 2 or 4-Bolt Flange, SAE “A” Shaft (5/8" - 9T)
XK	SAE “B” 2 or 4-Bolt Flange, SAE “B” Shaft (7/8" - 13T)
XQ	SAE “B” 2 or 4-Bolt Flange, SAE “B” Shaft (7/8" - 13T)
XR	Chelsea Special (Cloverleaf), SAE “B” Shaft (7/8" - 13T)
XX	1-1/4" Tapered Output Shaft w/ Keyway
XY	ISO 7653 Pump Mount DIN 5462 Shaft
RC	Rotatable SAE “A” 2-Bolt Flange, SAE “A” Shaft (5/8" - 9T)
RD	Rotatable SAE “A” 2-Bolt Flange, SAE “B” Shaft (7/8" - 13T)
RA	Rotatable SAE “B” 2-Bolt Flange, SAE “B” Shaft (7/8" - 13T)
RF	Rotatable SAE “B” 2-Bolt Flange, SAE “BB” Shaft (1" - 15T)
RB	Rotatable SAE “B” 4-Bolt Flange, SAE “B” Shaft (7/8" - 13T)
RE	Rotatable SAE “B” 4-Bolt Flange, SAE “BB” Shaft (1" - 15T)
RY	Rotatable ISO 7653 Pump Mount DIN 5462 Shaft
GA	Greaseable SAE “B” 2-Bolt Rotatable Flange, SAE “B” Shaft (7/8" - 13T)
GH	Greaseable SAE “B” 2-Bolt Rotatable Flange, SAE “BB” Shaft (1" - 15T)
GB	Greaseable SAE “B” 4-Bolt Rotatable Flange, SAE “B” Shaft (7/8" - 13T)
GK	Greaseable SAE “B” 2 or 4-Bolt Flange, SAE “BB” Shaft (7/8" - 13T)
GQ	Greaseable SAE “B” 2 or 4-Bolt Flange, SAE “B” Shaft (7/8" - 13T)
GF	Greaseable SAE “B” 2 or 4-Bolt Flange, SAE “BB” Shaft (1" - 15T)
GZ	Greaseable Non Standard Flange, SAE “C” Shaft (1-1/4" - 14T)
GR	Greaseable Chelsea Special (Cloverleaf), SAE “B” Shaft (7/8" - 13T)
GY	Greaseable ISO 7653 Pump Mount DIN 5462 Shaft

[1] Includes mounting parts
[2] Includes installation kit, console sold separately

Parker Hannifin Corporation
Chelsea Products Division
Olive Branch, MS 38654 USA

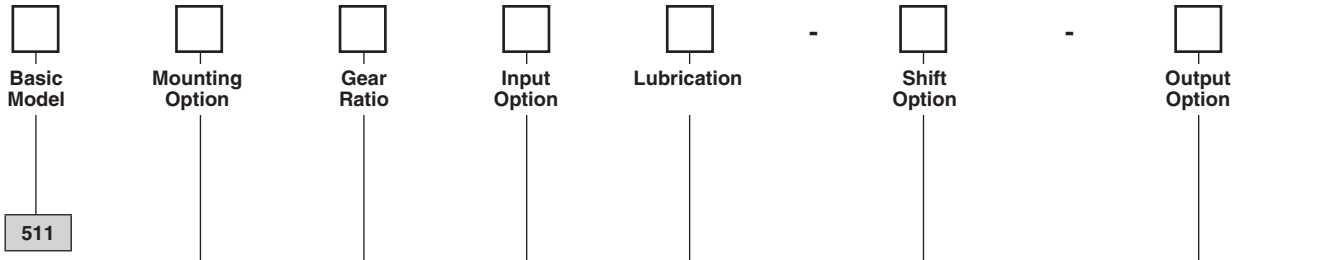

R	1:1

Option Code	
X	Non Wet Spline
W	Wet Spline Only

Option Code	
X	ISO 7653 80mm x 80mm Mount

Option Code	
A	Air Shift
V	Volvo I-Shift & Mack mDrive Kit
P	12V Elec/Air Shift
Q	24V Elec/Air Shift
F	12V Elec/Air ZF-As Tronic Meritor Freedomline™
H	No Shift Kit

Option Code	
AA	ZF S6-36, 6S-850, 6S-700
AB	VECO 2845.6, 2855.5
AC	ZF AS-Tronic Meritor Freedomline™
AH	ZF S6-65/66/70/75/80/90, 6S-800, 6S-1000, 6S-1200
AQ	ZF 9S-75, 9S-109, 16S-109, 9S-1110TD, 9S-1110TO, 9S-1310TO
AR	Fuller FS-6109, 6209A, 6309
AS	Volvo I-Shift
LG	Fuller FTS-10, FTSO-10

Option Code	
[50]XK	SAE “B” 2 or 4-Bolt Flange, SAE “B” Shaft (7/8" - 13T)
[54]XV	1410 Series Companion Flange
[23]XY	ISO 7653 Pump Mount DIN 5462 Shaft

[23] Must be purchased with Wet Spline
[50] Available in the Wet Spline (W) or Dry Spline (X) output options.
[54] “X” Lube Option Only

Parker Hannifin Corporation
Chelsea Products Division
Olive Branch, MS 38654 USA

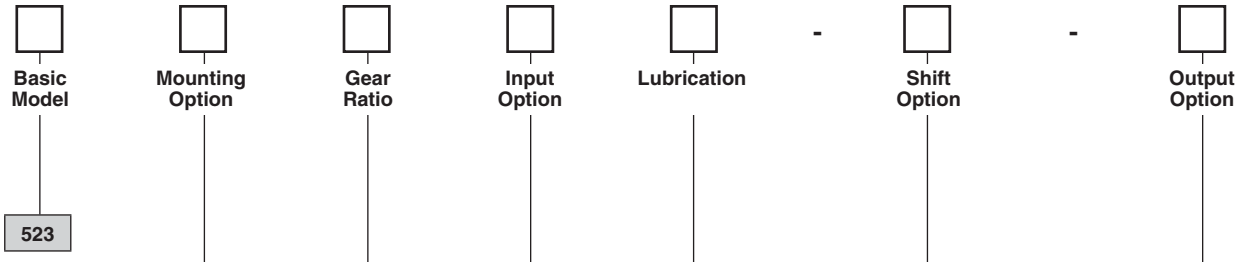

T	29/21
V	23/14

Option Code	
X	Non Wet Spline
W	Wet Spline

Option Code	
X	ISO 7653 80mm x 80mm Mount

Option Code	
A	Air Shift
V	Volvo I-Shift & Mack mDrive Kit
P	12V Elec/Air Shift
Q	24V Elec/Air Shift
F	12V Elec/Air ZF-As Tronic Meritor Freedomline™
H	No Shift Kit

Option Code	
AA	ZF S6-36, 6S-850, 6S-700
AB	IVECO 2845.6, 2855.5
AC	ZF-AS Tronic Meritor Freedomline™
AH	ZF S6-65/66/70/75/80/90, 6S-800, 6S-1000, 6S-1200
AQ	ZF 9S-75, 9S-109, 16S-109, 9S-1110TD, 9S-1110TO, 9S-1310TO
AR	Fuller FS-6109, 6209A, 6309
AS	Volvo I-Shift
LG	Fuller FTS-10, FTSO-10
LQ	Eaton Fuller Procision - EPS

Option Code	
[50]XK	SAE “B” 2 or 4-Bolt Flange, SAE “B” Shaft (7/8" - 13T)
[54]XV	1410 Series Companion Flange
[50]XY	ISO 7653 Pump Mount DIN 5462 Shaft

[50] Available in the Wet Spline (W) or Dry Spline (X) lube options
[54] “X” Lube Option Only

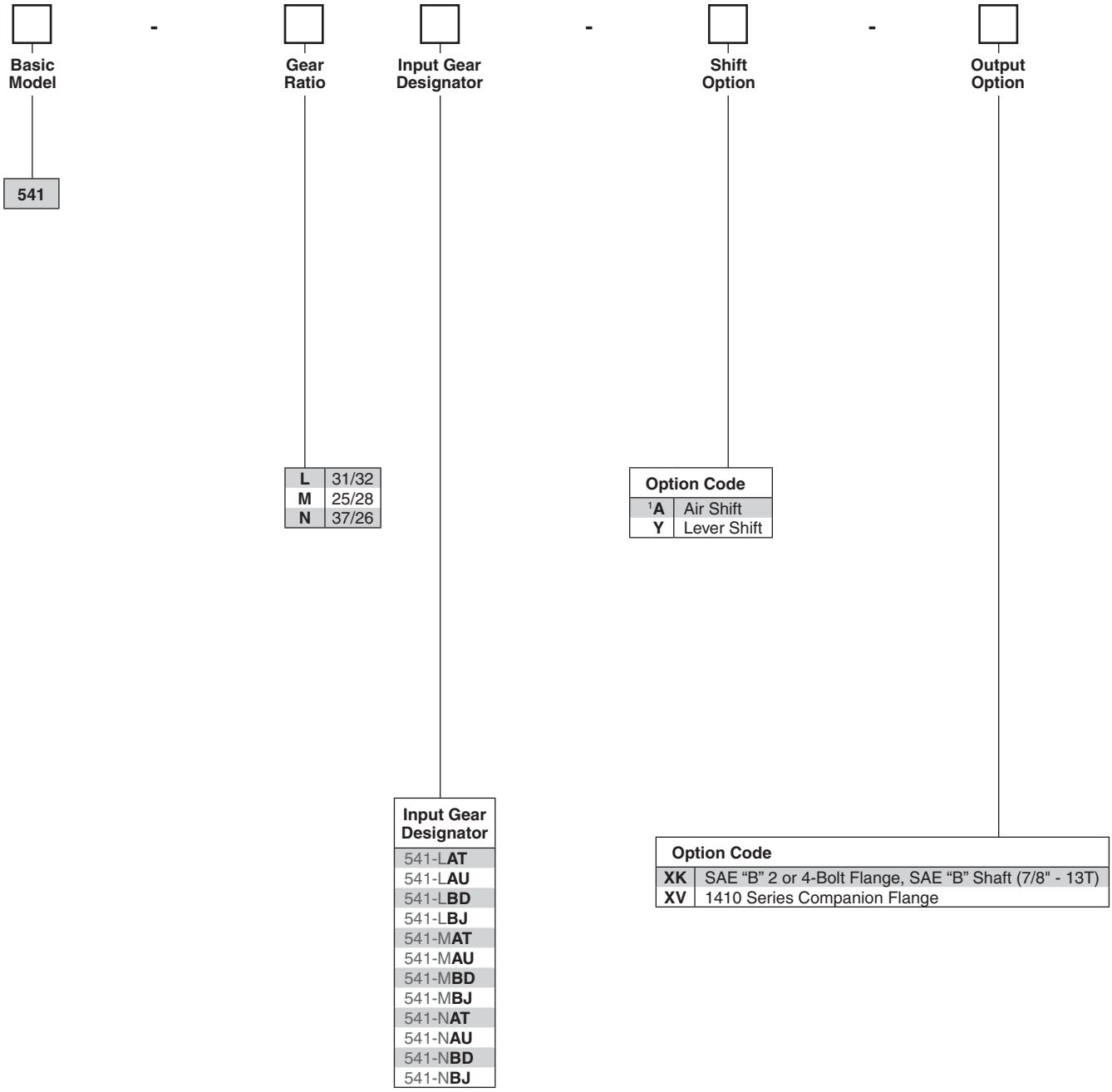

Assembly

❶ Includes mounting parts

Parker Hannifin Corporation
Chelsea Products Division
Olive Branch, MS 38654 USA

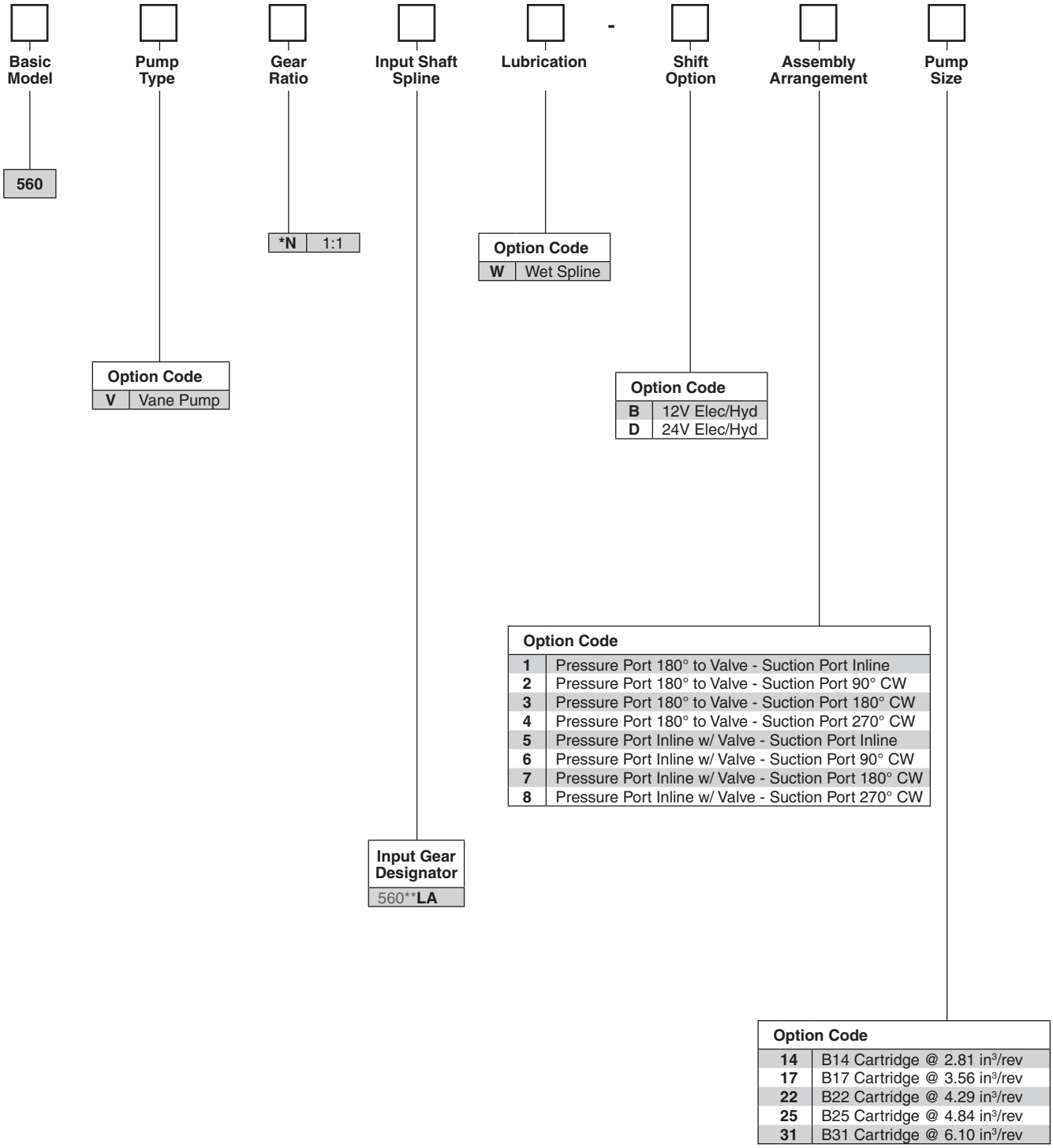

*See Application Page for Final Ratio.

NOTE: Pump displacement is theoretical.

Parker Hannifin Corporation
Chelsea Products Division
Olive Branch, MS 38654 USA

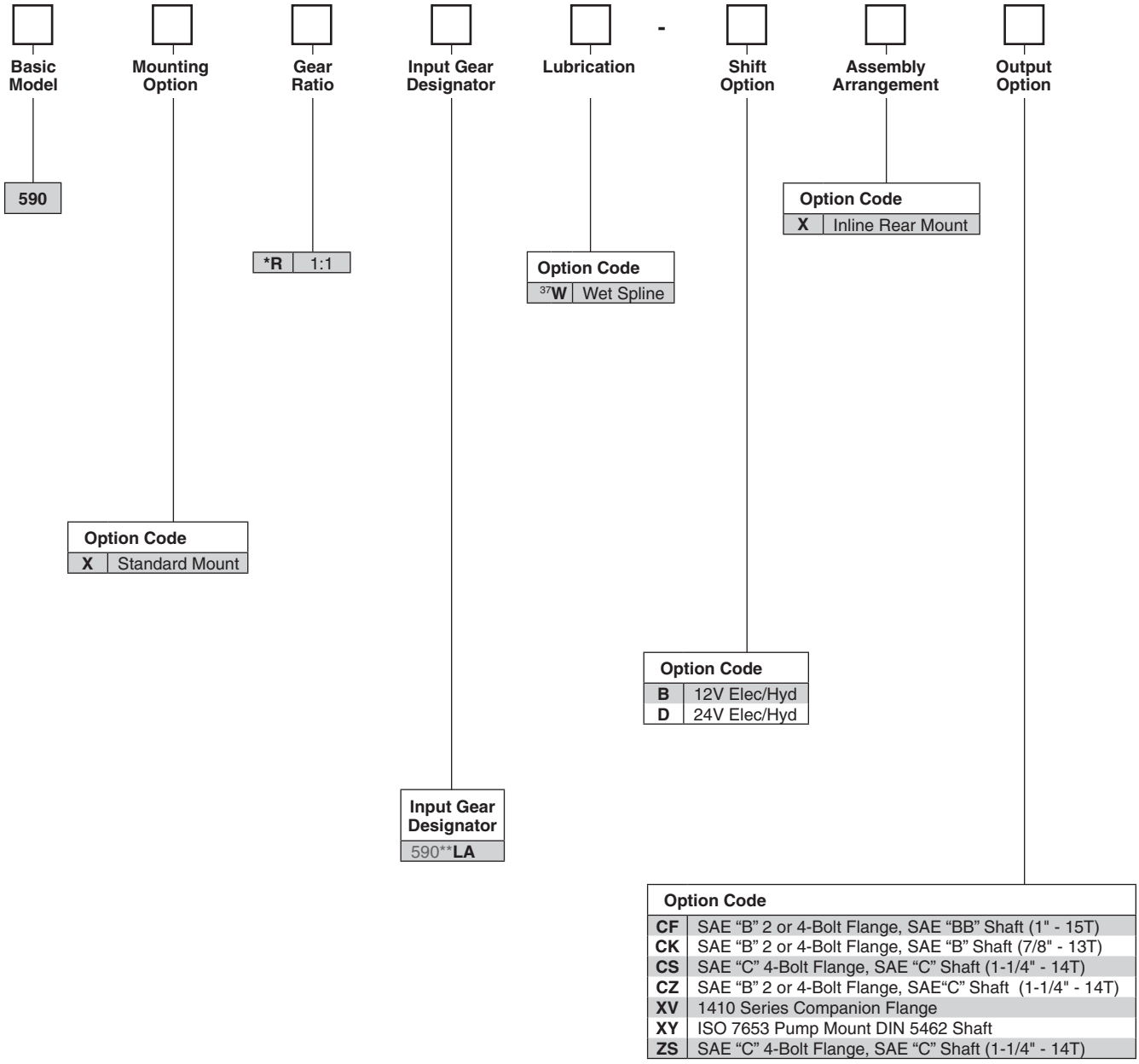

*See Application Page for Final Ratio.

37 Automatically Pressure Lubed with Wet Spline

Parker Hannifin Corporation
Chelsea Products Division
Olive Branch, MS 38654 USA

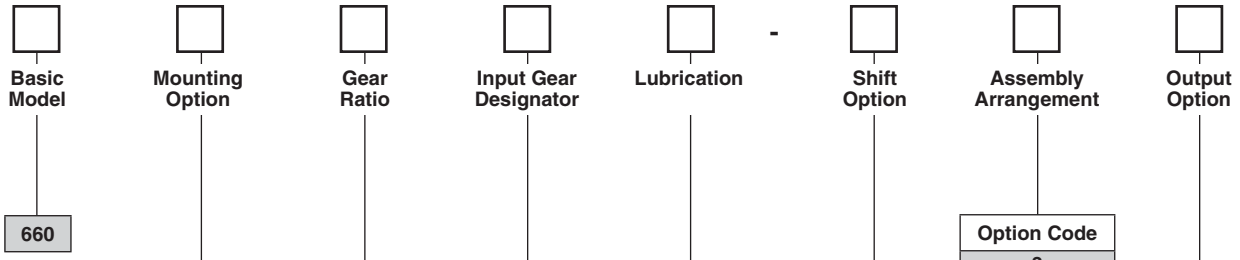

Option Code	
P	Pressure Lube
X	No Pressure Lube

Option Code
3
4
5
6

F	21/37
Q	19/24
R	22/24
S	24/22

Option Code	
X	Standard Mount
G	Standard Mount w/ Metric Studs
K	Standard Mount w/o Stud Kit
Z	Deep Mount
L	Deep Mount w/o Stud Kit

Option Code	
[1]A	Air Shift
[1]P	12V Elec/Air Shift
V	Air Shift w/o Installation Kit
[21]S	Air Shift w/ PTO/Dump Pump Combo Valve w/ Kick Out w/ Neutral Spring Return
[21]T	Air Shift w/ PTO/Dump Pump Combo Valve w/o Kick Out w/ Neutral Spring Return
[21]U	Air Shift w/ PTO/Dump Pump Combo Valve w/ Kick Out w/o Neutral Spring Return
[1]W	Wire Shift
X	Wire Shift w/o Cable & Knob
M	Constant Mesh
H	No Shifter Kit
C	Special Shift Control & Bracket Kit

Input Gear Designator	Input Gear Part Number
660*F**AH**	5-P-1242
660*F**BG**	5-P-1325
660*F**DA**	5-P-1330
660*F**ED**	5-P-1335
660*F**JA**	5-P-1345
660*H**AH**	5-P-1494
660*Q**AH**	5-P-1246
660*Q**BG**	5-P-1326
660*Q**DA**	5-P-1331
660*Q**ED**	5-P-1336
660*Q**JA**	5-P-1346
660*R**AH**	5-P-1441
660*S**AH**	5-P-1322
660*S**BG**	5-P-1327
660*S**DA**	5-P-1332
660*S**ED**	5-P-1337
660*S**JA**	5-P-1347

Option Code	
AF	SAE “B” 2 or 4-Bolt Flange, SAE “BB” Shaft (1" - 15T)
AK	SAE “B” 2-Bolt Flange, SAE “B” Shaft (7/8" - 13T)
AZ	Non Standard Flange, SAE “C” Shaft (1-1/4" - 14T)
XD	Rd Standard Shaft (1-1/4" - 5/16" Key)
XE	SAE “B” 2 or 4-Bolt Flange, SAE “A” Shaft (5/8" - 9T)
XK	SAE “B” 2 or 4-Bolt Flange, SAE “B” Shaft (7/8" - 13T)
[59]XQ	SAE “B” 2 or 4-Bolt Flange, SAE “B” Shaft (7/8" - 13T)
XR	Chelsea Special (Cloverleaf), SAE “B” Shaft (7/8" - 13T)
XV	1410 Series Companion Flange
XX	1-1/4" Tapered Output Shaft w/ Keyway
XY	ISO 7653 Pump Mount DIN 5462 Shaft
RC	Rotatable SAE “A” 2-Bolt Flange, SAE “A” Shaft (5/8" - 9T)
RA	Rotatable SAE “B” 2-Bolt Flange, SAE “B” Shaft (7/8" - 13T)
RB	Rotatable SAE “B” 4-Bolt Flange, SAE “B” Shaft (7/8" - 13T)
RF	Rotatable SAE “B” 2-Bolt Flange, SAE “BB” Shaft (1" - 15T)
RE	Rotatable SAE “B” 4-Bolt Flange, SAE “BB” Shaft (1" - 15T)
RY	Rotatable ISO 7653 Pump Mount DIN 5462 Shaft
GA	Greaseable SAE “B” 2-Bolt Rotatable Flange, SAE “B” Shaft (7/8" - 13T)
GH	Greaseable SAE “B” 2-Bolt Rotatable Flange, SAE “BB” Shaft (1" - 15T)
GB	Greaseable SAE “B” 4-Bolt Rotatable Flange, SAE “B” Shaft (7/8" - 13T)
GK	Greaseable SAE “B” 2 or 4-Bolt Flange, SAE “B” Shaft (7/8" - 13T)
GQ	Greaseable SAE “B” 2 or 4-Bolt Flange, SAE “B” Shaft (7/8" - 13T)
GF	Greaseable SAE “B” 2 or 4-Bolt Flange, SAE “BB” Shaft (1" - 15T)
GZ	Greaseable Non Standard Flange, SAE “C” Shaft (1-1/4" - 14T)
GR	Greaseable Chelsea Special (Cloverleaf), SAE “B” Shaft (7/8" - 13T)
GY	Greaseable ISO 7653 Pump Mount DIN 5462 Shaft

[1] Includes mounting parts
[21] Includes installation kit, console sold separately
[59] Same as “XK” except rotated 90°

Parker Hannifin Corporation
Chelsea Products Division
Olive Branch, MS 38654 USA

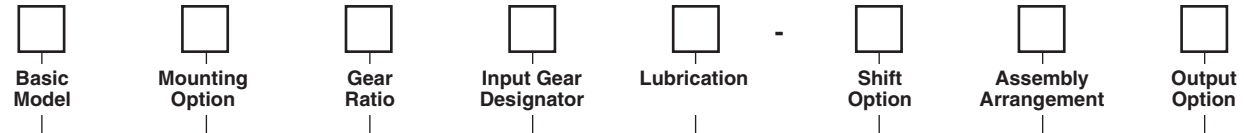

680

Option Code
3
4
5
6

F	21/37
Q	19/24
R	22/24
S	24/22

Option Code	
P	Pressure Lube
X	No Pressure Lube

Option Code	
X	Standard Mount
G	Standard Mount w/ Metric Studs
K	Standard Mount w/o Metric Studs
Z	Deep Mount

Input Gear Designator	Input Gear Part Number
680*F**AH**	5-P-1242
680*F**BG**	5-P-1325
680*F**DA**	5-P-1330
680*H**AH**	5-P-1494
680*Q**AH**	5-P-1246
680*Q**BG**	5-P-1326
680*Q**DA**	5-P-1331
680*R**AH**	5-P-1441
680*S**AH**	5-P-1322
680*S**BG**	5-P-1327
680*S**DA**	5-P-1332

Option Code	
[1]A	Air Shift
[1]P	12V Elec/Air Shift
V	Air Shift w/o Installation Kit
[21]S	Air Shift w/ PTO/Dump Pump Combo Valve w/ Kick Out w/ Neutral Spring Return
[21]T	Air Shift w/ PTO/Dump Pump Combo Valve w/o Kick Out w/ Neutral Spring Return
[21]U	Air Shift w/ PTO/Dump Pump Combo Valve w/ Kick Out w/o Neutral Spring Return
[1]W	Wire Shift
X	Wire Shift w/o Cable & Knob
M	Constant Mesh
H	No Shifter Kit
C	Special Shift Control & Bracket Kit

Option Code	
AF	SAE “B” 2 or 4-Bolt Flange, SAE “BB” Shaft (1" - 15T)
AK	SAE “B” 2-Bolt Flange, SAE “B” Shaft (7/8" - 13T)
AZ	Non Standard Flange, SAE “C” Shaft (1-1/4" - 14T)
XD	Rd Standard Shaft (1-1/4" - 5/16" Key)
XE	SAE “B” 2 or 4-Bolt Flange, SAE “A” Shaft (5/8" - 9T)
XK	SAE “B” 2 or 4-Bolt Flange, SAE “B” Shaft (7/8" - 13T)
[59]XQ	SAE “B” 2 or 4-Bolt Flange, SAE “B” Shaft (7/8" - 13T)
XR	Chelsea Special (Cloverleaf), SAE “B” Shaft (7/8" - 13T)
XV	1410 Series Companion Flange
XX	1-1/4" Tapered Output Shaft w/ Keyway
XY	ISO 7653 Pump Mount DIN 5462 Shaft
RC	Rotatable SAE “A” 2-Bolt Flange, SAE “A” Shaft (5/8" - 9T)
RA	Rotatable SAE “B” 2-Bolt Flange, SAE “B” Shaft (7/8" - 13T)
RB	Rotatable SAE “B” 4-Bolt Flange, SAE “B” Shaft (7/8" - 13T)
RF	Rotatable SAE “B” 2-Bolt Flange, SAE “BB” Shaft (1" - 15T)
RE	Rotatable SAE “B” 4-Bolt Flange, SAE “BB” Shaft (1" - 15T)
RY	Rotatable ISO 7653 Pump Mount DIN 5462 Shaft
GA	Greaseable SAE “B” 2-Bolt Rotatable Flange, SAE “B” Shaft (7/8" - 13T)
GH	Greaseable SAE “B” 2-Bolt Rotatable Flange, SAE “BB” Shaft (1" - 15T)
GB	Greaseable SAE “B” 4-Bolt Rotatable Flange, SAE “B” Shaft (7/8" - 13T)
GK	Greaseable SAE “B” 2 or 4-Bolt Flange, SAE “B” Shaft (7/8" - 13T)
GQ	Greaseable SAE “B” 2 or 4-Bolt Flange, SAE “B” Shaft (7/8" - 13T)
GF	Greaseable SAE “B” 2 or 4-Bolt Flange, SAE “BB” Shaft (1" - 15T)
GZ	Greaseable Non Standard Flange, SAE “C” Shaft (1-1/4" - 14T)
GR	Greaseable Chelsea Special (Cloverleaf), SAE “B” Shaft (7/8" - 13T)
GY	Greaseable ISO 7653 Pump Mount DIN 5462 Shaft

[1] Includes mounting parts
[21] Includes installation kit, console sold separately
[59] Same as “XK” except rotated 90°

Assembly

Parker Hannifin Corporation
Chelsea Products Division
Olive Branch, MS 38654 USA

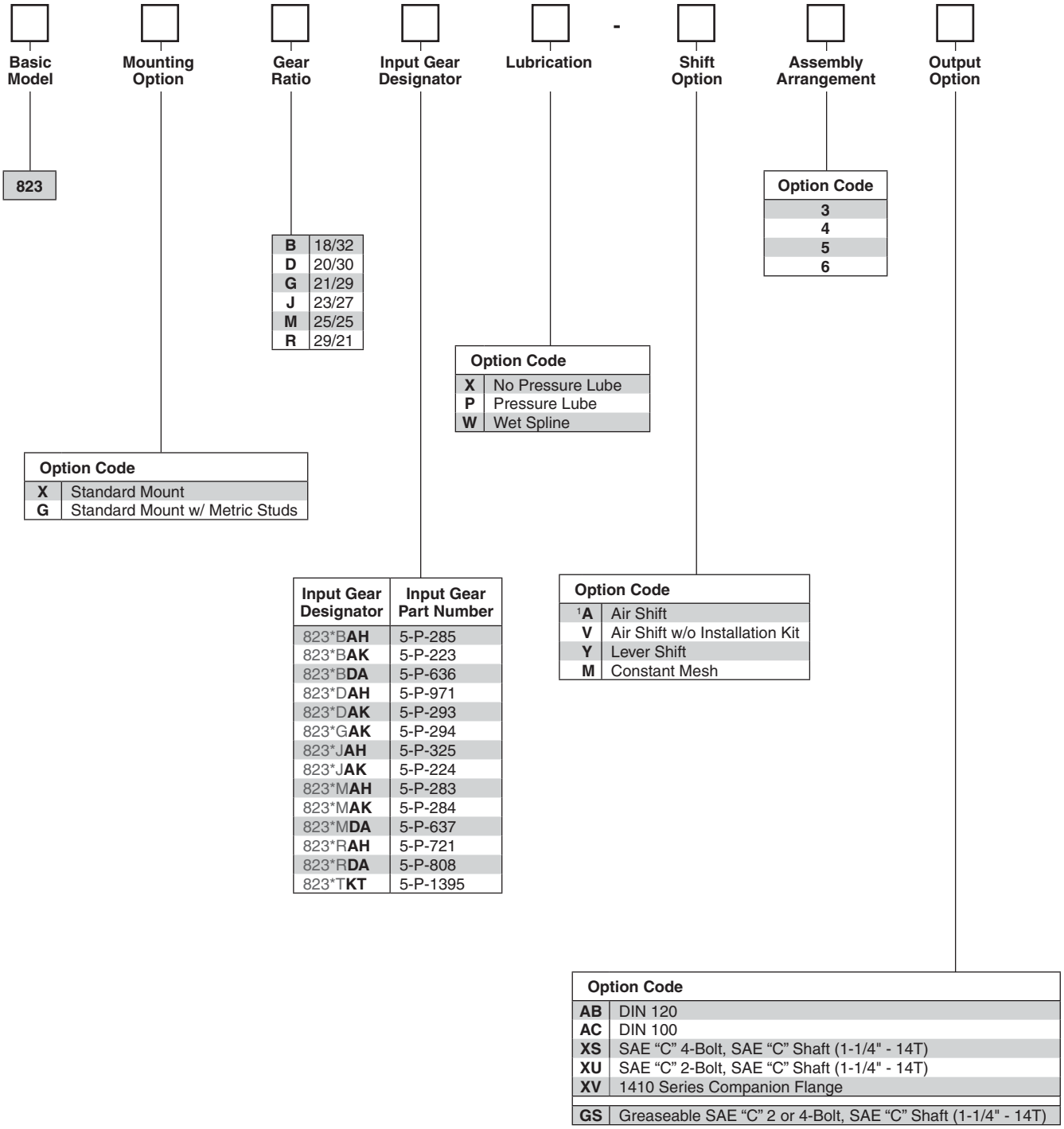

Option Code	
X	Standard Mount
G	Standard Mount w/ Metric Studs

B	18/32
D	20/30
G	21/29
J	23/27
M	25/25
R	29/21

Input Gear Designator	Input Gear Part Number
823*B**AH**	5-P-285
823*B**AK**	5-P-223
823*B**DA**	5-P-636
823*D**AH**	5-P-971
823*D**AK**	5-P-293
823*G**AK**	5-P-294
823*J**AH**	5-P-325
823*J**AK**	5-P-224
823*M**AH**	5-P-283
823*M**AK**	5-P-284
823*M**DA**	5-P-637
823*R**AH**	5-P-721
823*R**DA**	5-P-808
823*T**KT**	5-P-1395

Option Code	
X	No Pressure Lube
P	Pressure Lube
W	Wet Spline

Option Code	
[1]A	Air Shift
V	Air Shift w/o Installation Kit
Y	Lever Shift
M	Constant Mesh

Option Code
3
4
5
6

Option Code	
AB	DIN 120
AC	DIN 100
XS	SAE “C” 4-Bolt, SAE “C” Shaft (1-1/4" - 14T)
XU	SAE “C” 2-Bolt, SAE “C” Shaft (1-1/4" - 14T)
XV	1410 Series Companion Flange
GS	Greaseable SAE “C” 2 or 4-Bolt, SAE “C” Shaft (1-1/4" - 14T)

❶ Includes mounting parts

Parker Hannifin Corporation
Chelsea Products Division
Olive Branch, MS 38654 USA

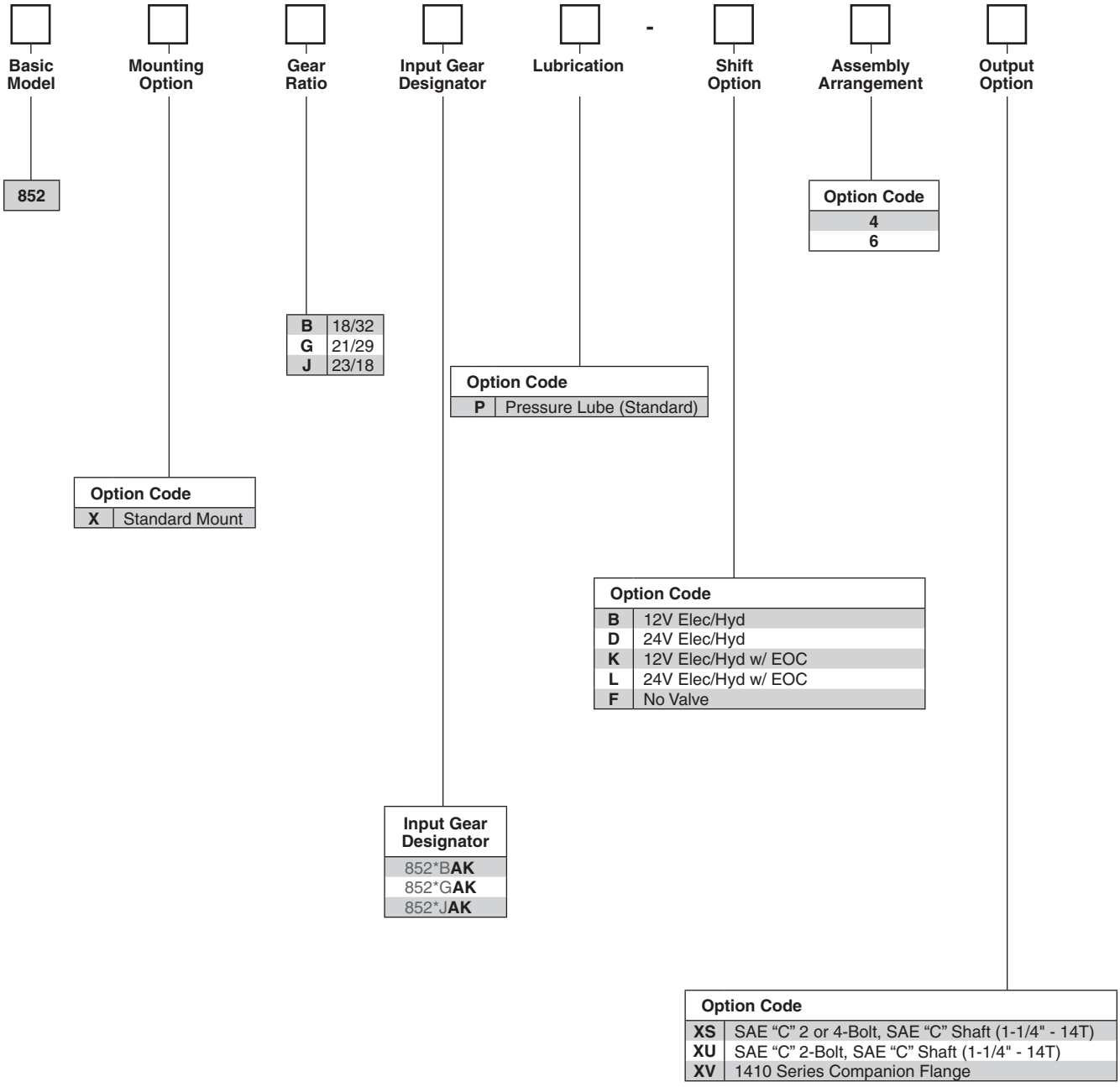

Parker Hannifin Corporation
Chelsea Products Division
Olive Branch, MS 38654 USA

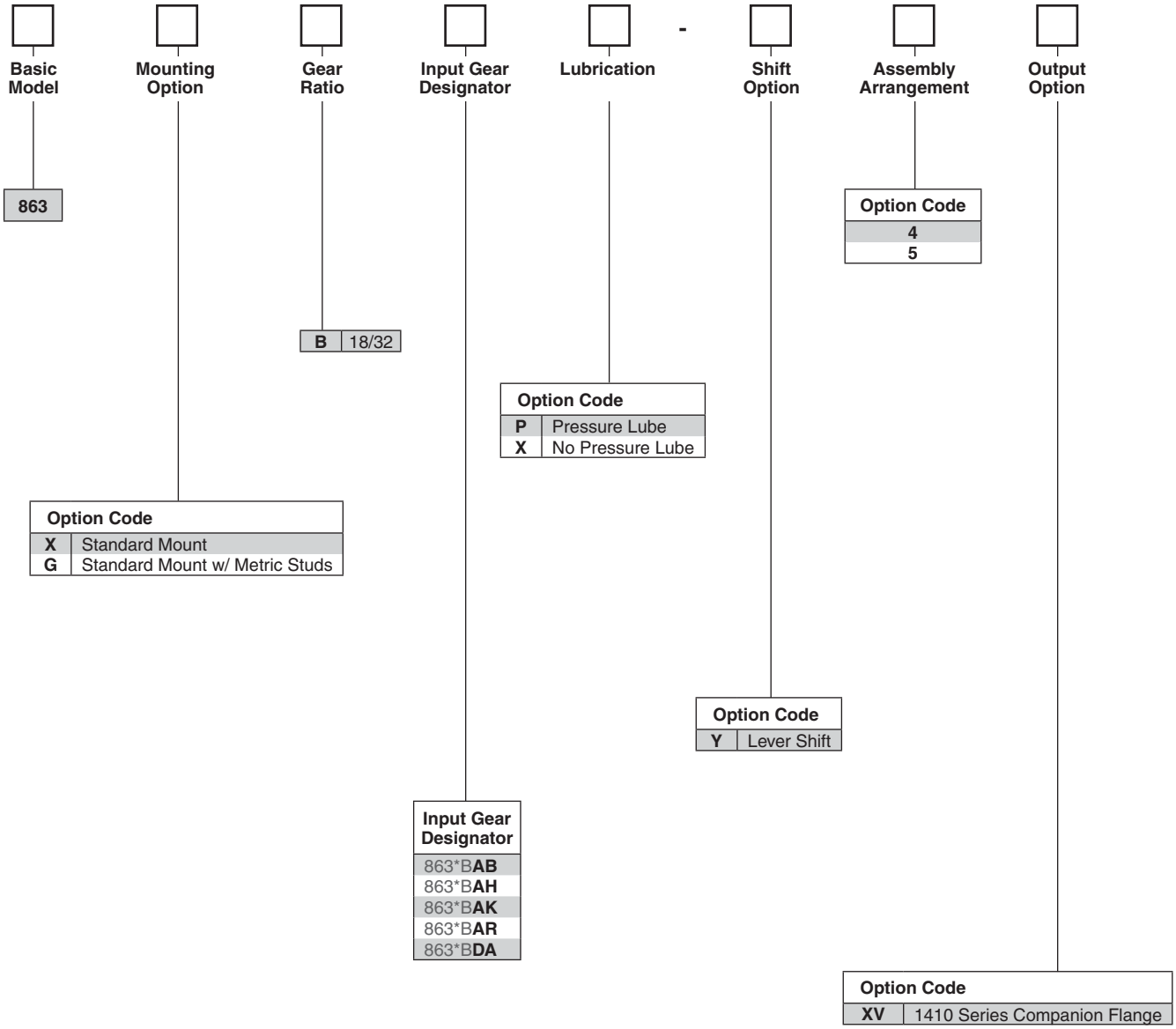

Parker Hannifin Corporation
Chelsea Products Division
Olive Branch, MS 38654 USA

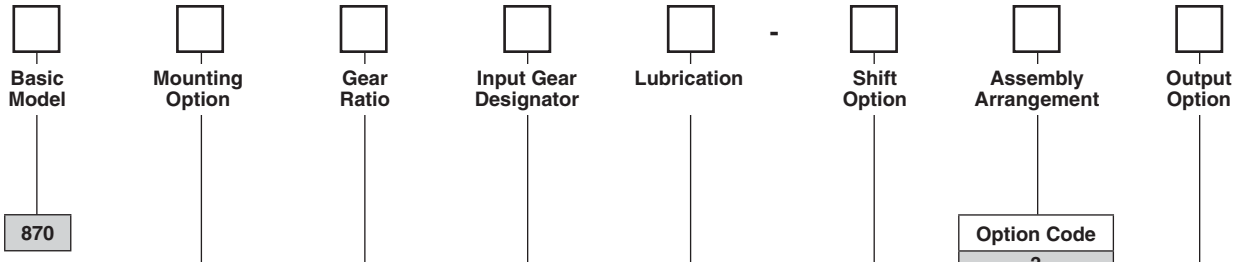

870

Option Code
3
5

A	24/40
B	25/39
C	26/38
D	27/37
E	29/35
F	31/33
G	33/31
H	34/30
J	35/29

Option Code	
P	Pressure Lube
[5]**W**	Wet Spline

Option Code	
X	Standard Mount

Input Gear Designator
870XA**FJ**
870XB**FJ**
870XC**FJ**
870XD**FJ**
870XE**FJ**
870XF**FJ**
870XJ**FJ**
870XA**KV**
870XB**KV**
870XC**KV**
870XD**KV**
870XE**KV**
870XF**KV**
870XG**KV**
870XH**KV**
870XJ**KV**

Option Code	
B	12V Elec/Hyd
D	24V Elec/Hyd
K	12V Elec/Hyd w/ EOC
L	24V Elec/Hyd w/ EOC
G	12V Elec/Hyd Valve w/o EOC - Remote
H	24V Elec/Hyd Valve w/o EOC - Remote

Option Code	
AB	DIN 120
AC	DIN 100
BA	1410 Companion Flange w/ Brake
BB	DIN 120 Flange w/ Drag Brake
BC	DIN 100 Flange w/ Drag Brake
XV	1410 Series Companion Flange
RF	Rotatable SAE “B” 2-Bolt Flange, SAE “BB” Shaft (1" - 15T)
RZ	Rotatable SAE “B” 2 or 4-Bolt Pump Flange, SAE “C” Shaft (1-1/4" - 14T)
RS	Rotatable SAE “C” 2 or 4-Bolt Pump Mount, SAE “C” (1-1/4" - 14T)
RY	Rotatable ISO 7653 Pump Mount DIN 5462 Shaft

Assembly

[5] Automatically pressure lubed

Parker Hannifin Corporation
Chelsea Products Division
Olive Branch, MS 38654 USA

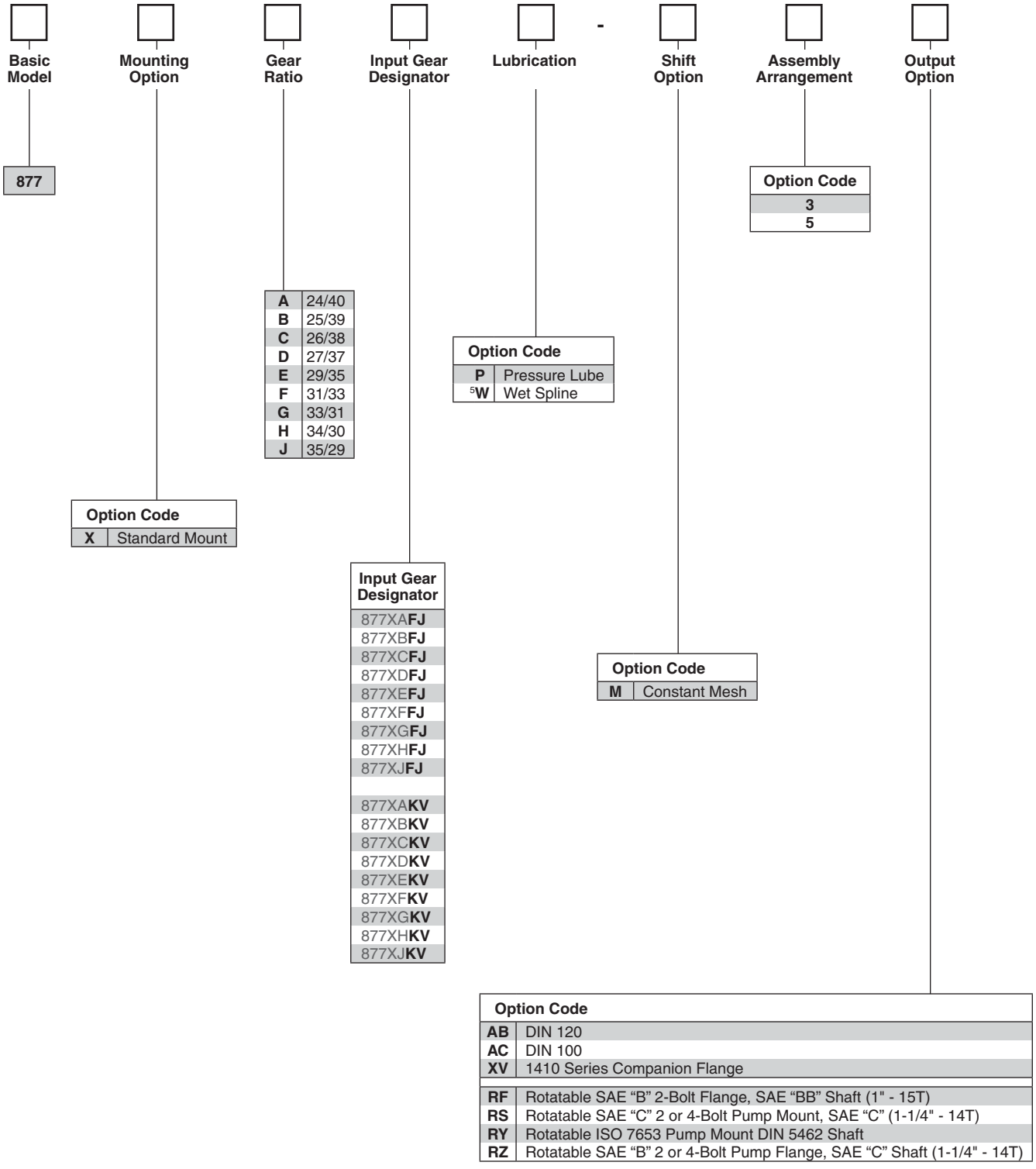

Assembly

❺ Automatically pressure lubed

Parker Hannifin Corporation
Chelsea Products Division
Olive Branch, MS 38654 USA

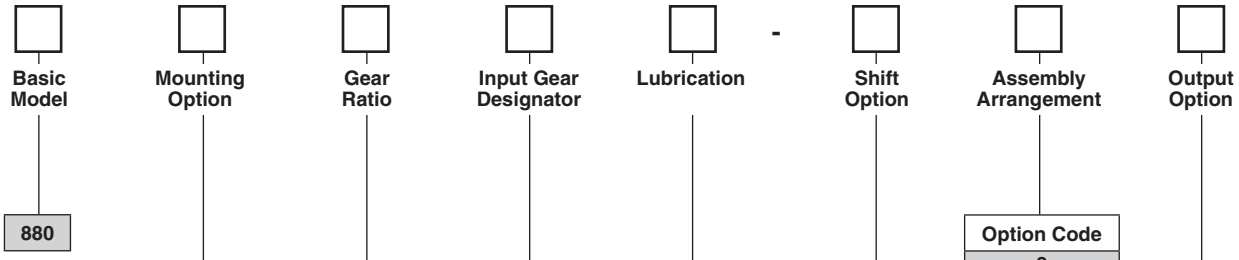

Option Code	
G	Standard Mount w/ Metric Studs
K	Standard Mount w/o Stud Kit
L	Deep Mount w/o Stud Kit
X	Standard Mount
Z	Deep Mount

B	18/32
D	20/30
G	21/29
J	23/27
M	25/25
Q	27/23
R	29/21
T	32/18

Option Code	
P	Pressure Lube
X	No Pressure Lube

Option Code
3
4
5
6

Input Gear Designator	Input Gear Part Number
880*B**AH**	5-P-1100
880*B**AK**	5-P-1106
880*B**DA**	5-P-1120
880*D**AH**	5-P-1101
880*D**AK**	5-P-1107
880*G**AH**	5-P-1135
880*G**AK**	5-P-1108
880*G**DA**	5-P-1174
880*J**AH**	5-P-1102
880*J**AK**	5-P-1109
880*M**AH**	5-P-1103
880*M**AK**	5-P-1110
880*M**DA**	5-P-1121
880*Q**AH**	5-P-1385
880*R**AH**	5-P-1104
880*R**DA**	5-P-1122
880*T**AH**	5-P-1105
880*T**BG**	5-P-1177
880*T**DA**	5-P-1123
880*T**DU**	5-P-1131
880*B**IT**	KIT PTO
880*D**IT**	KIT PTO
880*G**IT**	KIT PTO
880*J**IT**	KIT PTO
880*M**IT**	KIT PTO
880*Q**IT**	KIT PTO
880*R**IT**	KIT PTO
880*T**IT**	KIT PTO

Option Code	
[1]A	Air Shift
[1]P	12V Elec/Air Shift
V	Air Shift w/o Installation Kit
Y	Lever Shift
M	Constant Mesh
H	No Shift Assembly

Option Code	
AF	SAE “B” 2 or 4-Bolt Flange, SAE “BB” Shaft (1" - 15T)
AZ	Non Standard Flange, SAE “C” Shaft (1-1/4" - 14T)
XK	SAE “B” 2 or 4-Bolt Flange, SAE “B” Shaft (7/8" - 13T)
XS	SAE “C” 2 or 4-Bolt, SAE “C” Shaft (1-1/4" - 14T)
XV	1410 Series Companion Flange
XY	ISO 7653 Pump Mount DIN 5462 Shaft
GS	Greaseable SAE “C” 2 or 4-Bolt, SAE “C” Shaft (1-1/4" - 14T)

Assembly

❶ Includes mounting parts

Parker Chelsea
Parker Hannifin Corporation
Chelsea Products Division
Olive Branch, MS 38654 USA

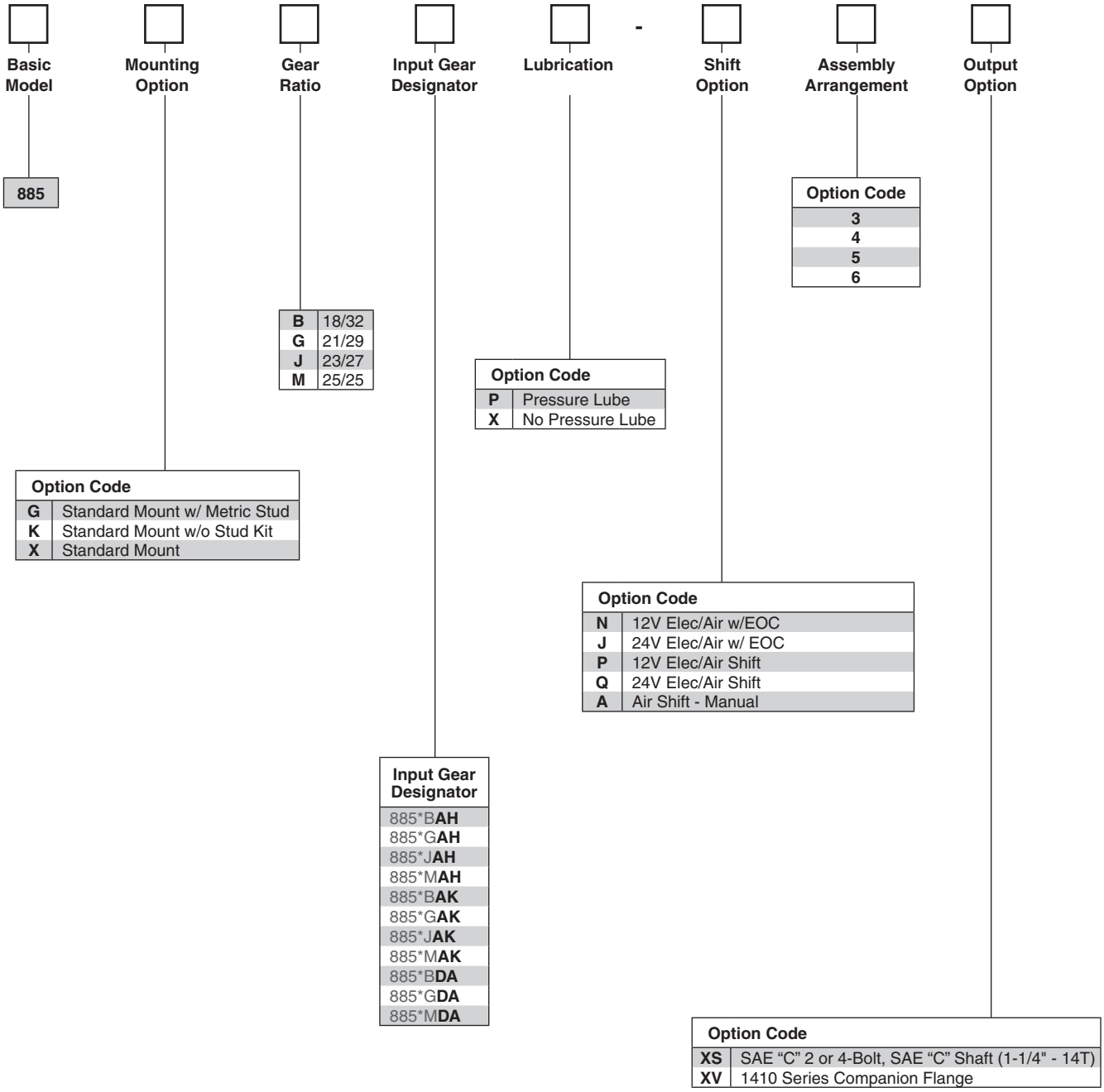

Parker Hannifin Corporation
Chelsea Products Division
Olive Branch, MS 38654 USA

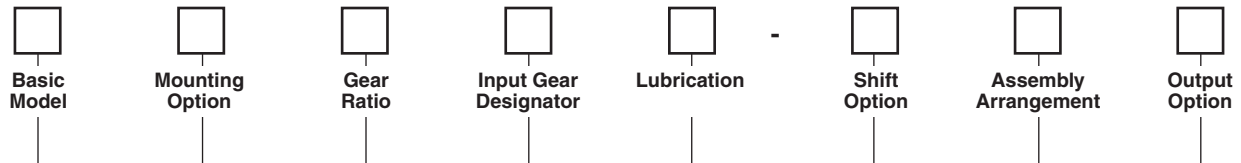

Option Code	
A	24/40
B	25/39
C	26/38
D	27/37
E	29/35
F	31/33

Option Code	
[37]W	Wet Spline

Option Code
[36]3
[35]5

Option Code	
C	HD “3” Left Hand Mount w/ Cooler
D	MD “3” Left Hand Mount w/ Cooler
E	MD “5” Side/Top Left Hand Mount
F	MD “5” Left Hand Mount w/ Retarder
H	HD “5” Left Hand Mount
J	HD “3” Left Hand Mount w/ Retarder
K	HD “5” Top Mount w/ Retarder
L	MD “5” Left Hand Mount
M	MD “5” Left Hand Mount w/ Retarder
N	MD “3” Left Hand Mount w/ Cooler
P	HD “5” Left Hand Mount w/ Retarder
R	MD “5” Right Hand Mount
T	MD “5” Side/Top Top Mount
U	HD “5” Top Mount
X	w/o Bracket & Hose Kit

MD – 3000 Family
HD – 4000 Family

Input Gear Designator
890*A**FJ***-*5
890*B**FJ***-*5
890*C**FJ***-*5
890*D**FJ***-*5
890*E**FJ***-*5
890*F**FJ***-*5
[33]890*G**FJ***-*5
[33]890*H**FJ***-*5

Option Code	
B	12V Elec/Hyd
D	24V Elec/Hyd
K	12V Elec/Hyd Remote Valve w/ EOC
L	24V Elec/Hyd Remote Valve w/ EOC
G	12V Elec/Hyd Remote Valve
H	24V Elec/Hyd Remote Valve

Option Code	
“3” Assembly Arrangement	
AB	DIN 120 Flange
AC	DIN 100 Flange
CF	SAE “B” 2 or 4-Bolt Flange, SAE “BB” Shaft (1" - 15T)
CK	SAE “B” 2 or 4-Bolt Flange, SAE “B” Shaft (7/8" - 13T)
CS	SAE “C” 4-Bolt Flange, SAE “C” Shaft (1-1/4" - 14T)
CZ	SAE “B” 2 or 4-Bolt Flange, SAE “C” Shaft (1-1/4" - 14T)
XV	1410 Series Companion Flange
XY	ISO 7653 Pump Mount DIN 5462 Shaft
ZS	SAE “C” 4-Bolt Flange, SAE “C” Shaft (1-1/4" - 14T)
“5” Assembly Arrangement	
AB	DIN 120 Flange
AC	DIN 100 Flange
AF	SAE “B” 2 or 4-Bolt Flange, SAE “BB” Shaft (1" - 15T)
AZ	Non Standard Flange, SAE “C” Shaft (1-1/4" - 14T)
[34]DA	SAE “D” 4-Bolt flange, 1-3/4" - 13T Shaft
XK	SAE “B” 2 or 4-Bolt Flange, SAE “B” Shaft (7/8" - 13T)
XS	SAE “C” 2 or 4-Bolt, SAE “C” Shaft (1-1/4" - 14T)
XV	1410 Series Companion Flange
XY	ISO 7653 Pump Mount DIN 5462 Shaft
ZS	SAE “C” 4-Bolt Flange, SAE “C” Shaft (1-1/4" - 14T)

Assembly

[33] “G” & “H” ratio for Allison MD only
[34] “DA” output is not available for transmission with a retarder or cooler
[35] “XS”, “XK”, “AF”, “AZ”, “XY”, outputs available with “5” ass’y arrangement and all mtg options except “C” & “J”
[36] “CS”, “CK”, “CF”, “CZ”, outputs only available with “3” ass’y arrangement and “C” & “J” mtg options
[37] Automatically Pressure lubed with wet spline

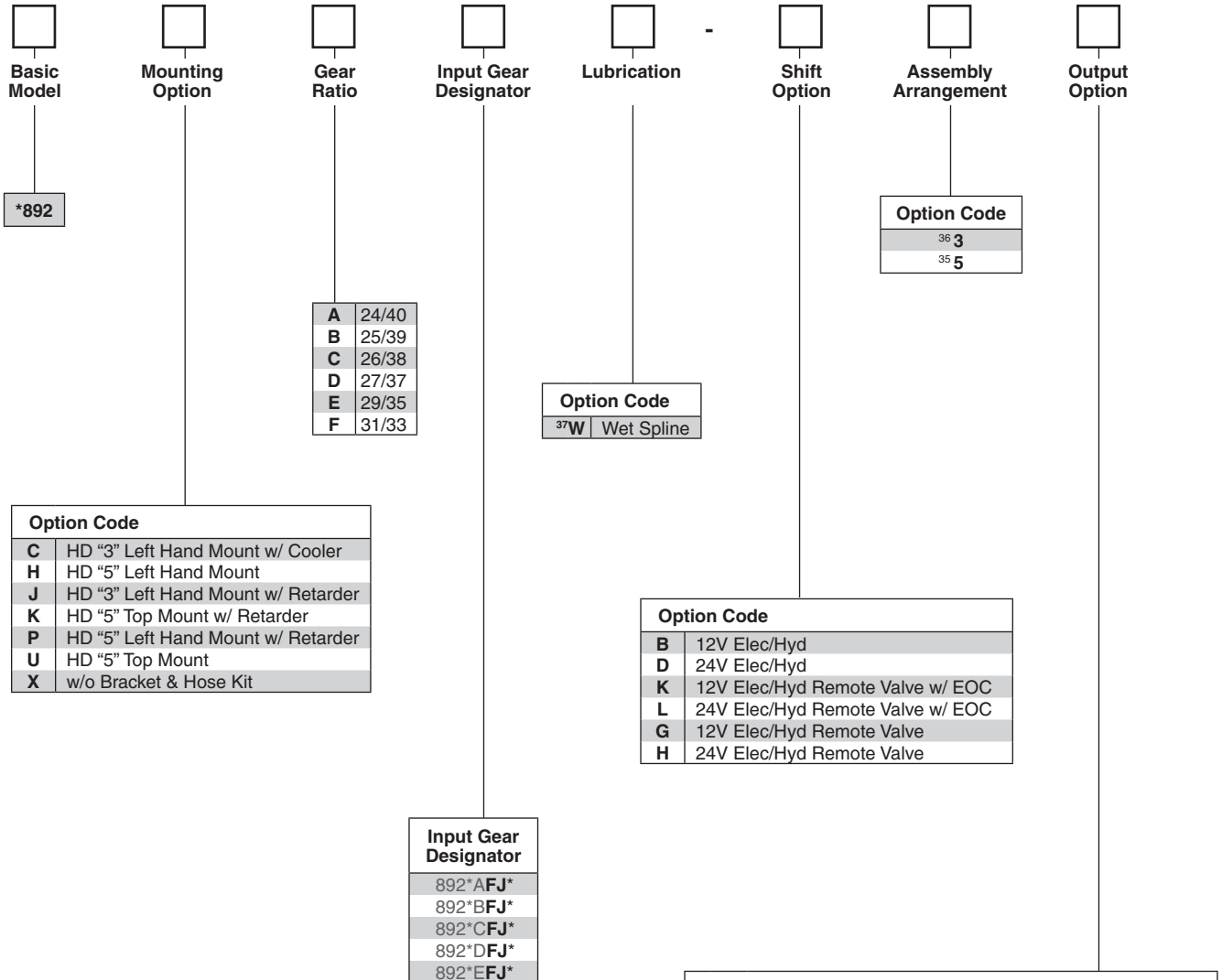

Basic Model

*892

Gear Ratio

A	24/40
B	25/39
C	26/38
D	27/37
E	29/35
F	31/33

Lubrication

Option Code	
[37]W	Wet Spline

Assembly Arrangement

Option Code
[36]3
[35]5

Mounting Option

Option Code	
C	HD “3” Left Hand Mount w/ Cooler
H	HD “5” Left Hand Mount
J	HD “3” Left Hand Mount w/ Retarder
K	HD “5” Top Mount w/ Retarder
P	HD “5” Left Hand Mount w/ Retarder
U	HD “5” Top Mount
X	w/o Bracket & Hose Kit

Shift Option

Option Code	
B	12V Elec/Hyd
D	24V Elec/Hyd
K	12V Elec/Hyd Remote Valve w/ EOC
L	24V Elec/Hyd Remote Valve w/ EOC
G	12V Elec/Hyd Remote Valve
H	24V Elec/Hyd Remote Valve

Input Gear Designator

Input Gear Designator
892*A**FJ***
892*B**FJ***
892*C**FJ***
892*D**FJ***
892*E**FJ***
892*F**FJ***

Output Option

Option Code	
“3” Assembly Arrangement	
AB	DIN 120 Flange
AC	DIN 100 Flange
CF	SAE “B” 2 or 4-Bolt Flange, SAE “BB” Shaft (1" - 15T)
CK	SAE “B” 2 or 4-Bolt Flange, SAE “B” Shaft (7/8" - 13T)
CS	SAE “C” 4-Bolt Flange, SAE “C” Shaft (1-1/4" - 14T)
CZ	SAE “B” 2 or 4-Bolt Flange, SAE “C” Shaft (1-1/4" - 14T)
XV	1410 Series Companion Flange
XY	ISO 7653 Pump Mount DIN 5462 Shaft
ZS	SAE “C” 4-Bolt Flange, SAE “C” Shaft (1-1/4" - 14T)
“5” Assembly Arrangement	
AB	DIN 120 Flange
AC	DIN 100 Flange
AF	SAE “B” 2 or 4-Bolt Flange, SAE “BB” Shaft (1" - 15T)
AZ	Non Standard Flange, SAE “C” Shaft (1-1/4" - 14T)
[34]DA	SAE “D” 4-Bolt flange, 1-3/4" - 13T Shaft
XK	SAE “B” 2 or 4-Bolt Flange, SAE “B” Shaft (7/8" - 13T)
XS	SAE “C” 2 or 4-Bolt, SAE “C” Shaft (1-1/4" - 14T)
XV	1410 Series Companion Flange
XY	ISO 7653 Pump Mount DIN 5462 Shaft
ZS	SAE “C” 4-Bolt Flange, SAE “C” Shaft (1-1/4" - 14T)

[34] “DA” output is not available for transmission with a retarder or cooler
[35] “XS”, “XK”, “AF”, “AZ”, “XY”, outputs available with “5” ass’y arrangement and all mtg options except “C” & “J”
[36] “CS”, “CK”, “CF”, “CZ”, outputs only available with “3” ass’y arrangement and “C” & “J” mtg options
[37] Automatically Pressure lubed with wet spline

*** For 4700/4800 Series Transmissions**

Parker Hannifin Corporation
Chelsea Products Division
Olive Branch, MS 38654 USA

Basic Model

897

Mounting Option

Option Code	
C	HD “3” Left Hand Mount w/ Cooler
D	MD “3” Left Hand Mount w/ Cooler
E	MD “5” Side/Top Left Hand Mount
F	MD “5” Left Hand Mount w/ Retarder
H	HD “5” Left Hand Mount
J	HD “3” Left Hand Mount w/ Retarder
K	HD “5” Top Mount w/ Retarder
L	MD “5” Left Hand Mount
M	MD “5” Left Hand Mount w/ Retarder
N	MD “3” Left Hand Mount w/ Cooler
P	HD “5” Left Hand Mount w/ Retarder
R	MD “5” Right Hand Mount
T	MD “5” Side/Top Top Mount
U	HD “5” Top Mount
X	w/o Bracket & Hose Kit

MD – 3000 Family
HD – 4000 Family

Gear Ratio

A	24/40
B	25/39
C	26/38
D	27/37
E	29/35
F	31/33
[33]G	33/31
[33]H	34/30

Input Gear Designator

Input Gear Designator
897*A**FJ***
897*B**FJ***
897*C**FJ***
897*D**FJ***
897*E**FJ***
897*F**FJ***
[33]897*G**FJ***
[33]897*H**FJ***

Lubrication

Option Code	
[37]W	Wet Spline

Shift Option

Option Code	
M	Constant Mesh

Assembly Arrangement

Option Code
[36]3
[35]5

Output Option

Option Code	
“3” Assembly Arrangement	
AB	DIN 120 Flange
AC	DIN 100 Flange
CF	SAE “B” 2 or 4-Bolt Flange, SAE “BB” Shaft (1" - 15T)
CK	SAE “B” 2 or 4-Bolt Flange, SAE “B” Shaft (7/8" - 13T)
CS	SAE “C” 4-Bolt Flange, SAE “C” Shaft (1-1/4" - 14T)
CZ	SAE “B” 2 or 4-Bolt Flange, SAE “C” Shaft (1-1/4" - 14T)
XV	1410 Series Companion Flange
XY	ISO 7653 Pump Mount DIN 5462 Shaft
ZS	SAE “C” 4-Bolt Flange, SAE “C” Shaft (1-1/4" - 14T)
“5” Assembly Arrangement	
AB	DIN 120 Flange
AC	DIN 100 Flange
AF	SAE “B” 2 or 4-Bolt Flange, SAE “BB” Shaft (1" - 15T)
AZ	Non Standard Flange, SAE “C” Shaft (1-1/4" - 14T)
[34]DA	SAE “D” 4-Bolt Flange, Shaft (1-3/4" - 13T)
XK	SAE “B” 2 or 4-Bolt Flange, SAE “B” Shaft (7/8" - 13T)
XS	SAE “C” 2 or 4-Bolt, SAE “C” Shaft (1-1/4" - 14T)
XV	1410 Series Companion Flange
XY	ISO 7653 Pump Mount DIN 5462 Shaft
ZS	SAE “C” 4-Bolt Flange, SAE “C” Shaft (1-1/4" - 14T)

[33] “G” & “H” ratio for Allison MD only
[34] “DA” output is not available for transmission with a retarder or cooler
[35] “XS”, “XK”, “AF”, “AZ”, “XY”, outputs available with “5” ass’y arrangement and all mtg options except “C” & “J”
[36] “CS”, “CK”, “CF”, “CZ”, outputs only available with “3” ass’y arrangement and “C” & “J” mtg options
[37] Automatically Pressure lubed with wet spline

Assembly

Parker Hannifin Corporation
Chelsea Products Division
Olive Branch, MS 38654 USA

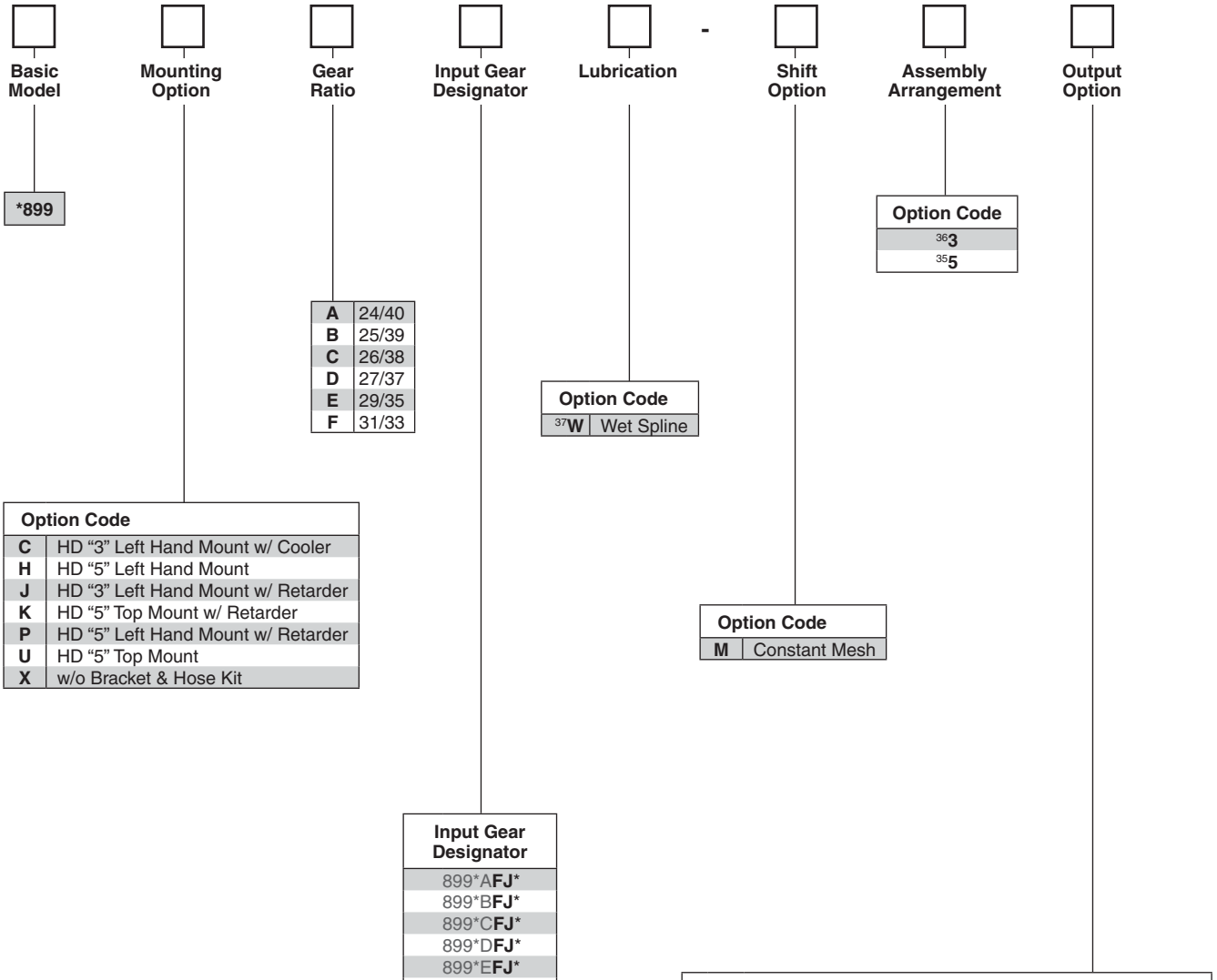

Option Code	
“3” Assembly Arrangement	
AB	DIN 120 Flange
AC	DIN 100 Flange
CF	SAE “B” 2 or 4-Bolt Flange, SAE “BB” Shaft (1" - 15T)
CK	SAE “B” 2 or 4-Bolt Flange, SAE “B” Shaft (7/8" - 13T)
CS	SAE “C” 4-Bolt Flange, SAE “C” Shaft (1-1/4" - 14T)
CZ	SAE “B” 2 or 4-Bolt Flange, SAE “C” Shaft (1-1/4" - 14T)
XV	1410 Series Companion Flange
XY	ISO 7653 Pump Mount DIN 5462 Shaft
ZS	SAE “C” 4-Bolt Flange, SAE “C” Shaft (1-1/4" - 14T)
“5” Assembly Arrangement	
AB	DIN 120 Flange
AC	DIN 100 Flange
AF	SAE “B” 2 or 4-Bolt Flange, SAE “BB” Shaft (1" - 15T)
AZ	Non Standard Flange, SAE “C” Shaft (1-1/4" - 14T)
[34]**DA**	SAE “D” 4-Bolt flange, 1-3/4" - 13T Shaft
XK	SAE “B” 2 or 4-Bolt Flange, SAE “B” Shaft (7/8" - 13T)
XS	SAE “C” 2 or 4-Bolt, SAE “C” Shaft (1-1/4" - 14T)
XV	1410 Series Companion Flange
XY	ISO 7653 Pump Mount DIN 5462 Shaft
ZS	SAE “C” 4-Bolt Flange, SAE “C” Shaft (1-1/4" - 14T)

[34] “DA” output is not available for transmission with a retarder or cooler
[35] “XS”, “XK”, “AF”, “AZ”, “XY”, outputs available with “5” ass’y arrangement and all mtg options except “C” & “J”
[36] “CS”, “CK”, “CF”, “CZ”, outputs only available with “3” ass’y arrangement and “C” & “J” mtg options
[37] Automatically Pressure lubed with wet spline

*** For 4700/4800 Series Transmissions**

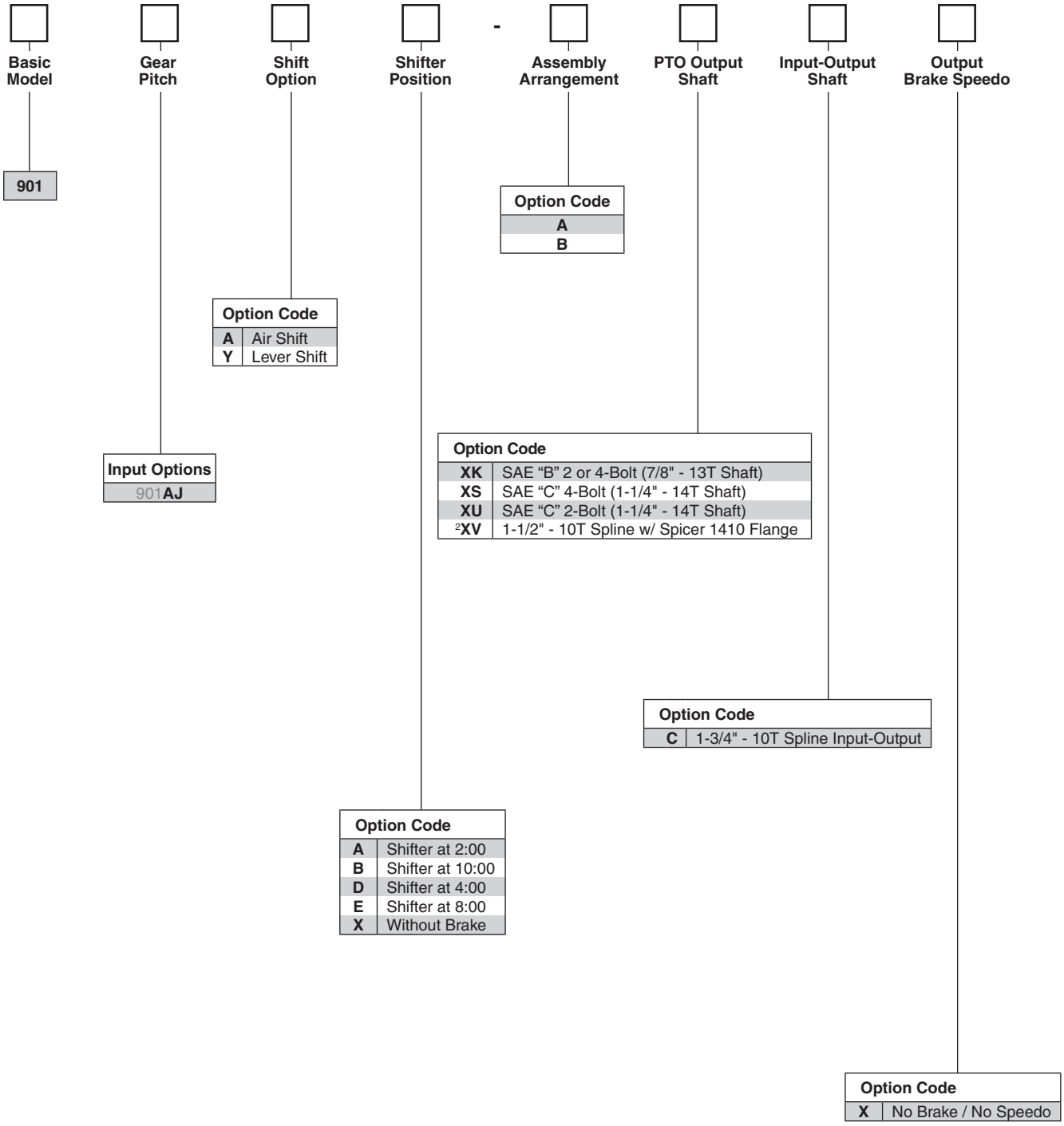

Assembly

❷ Standard shaft

Parker Hannifin Corporation
Chelsea Products Division
Olive Branch, MS 38654 USA

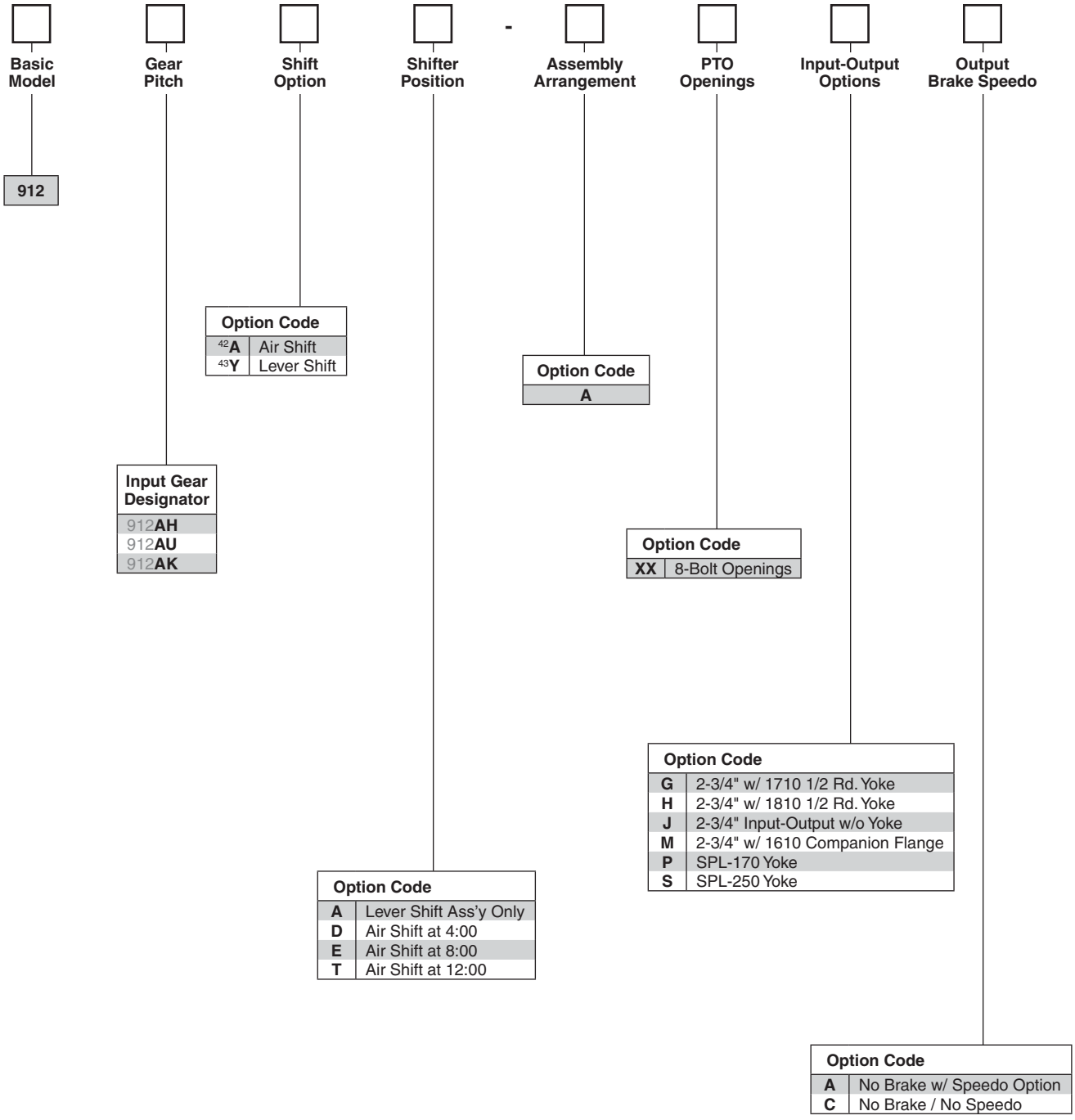

42 Air Shift, two 8-Bolt opening available
43 Lever Shift, three 8-Bolt opening available

Parker Hannifin Corporation
Chelsea Products Division
Olive Branch, MS 38654 USA

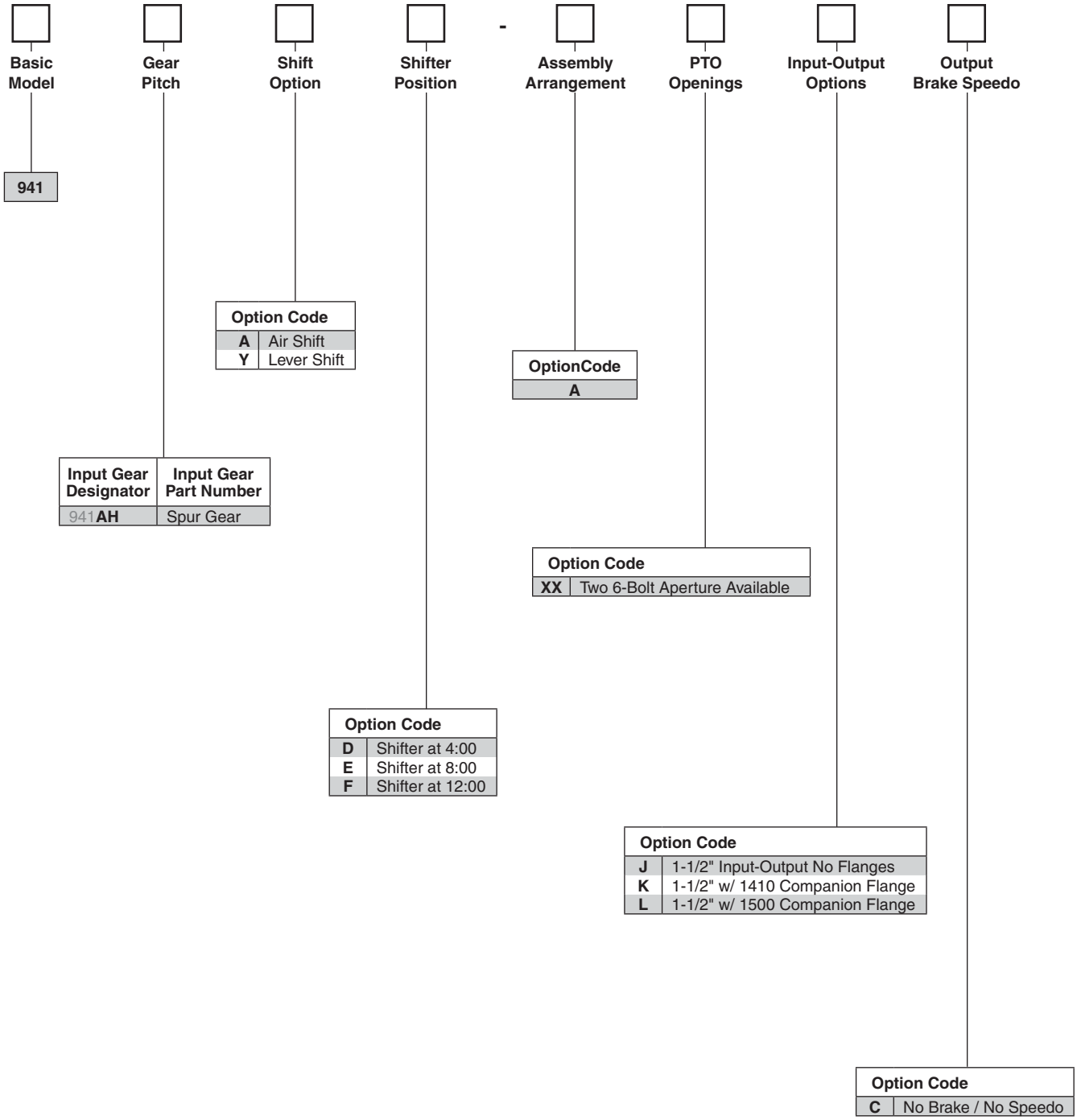

Parker Hannifin Corporation
Chelsea Products Division
Olive Branch, MS 38654 USA

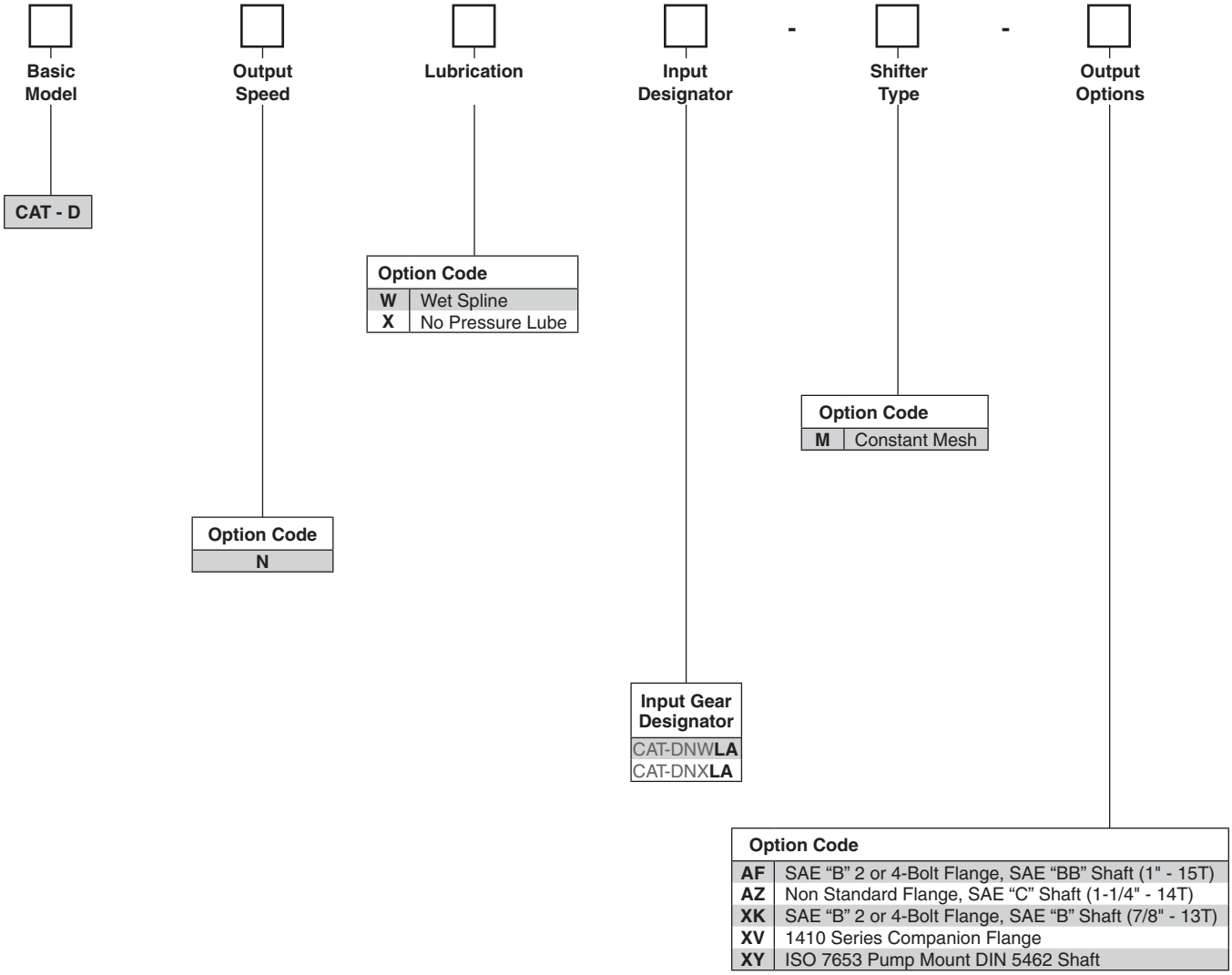

Parker Hannifin Corporation
Chelsea Products Division
Olive Branch, MS 38654 USA

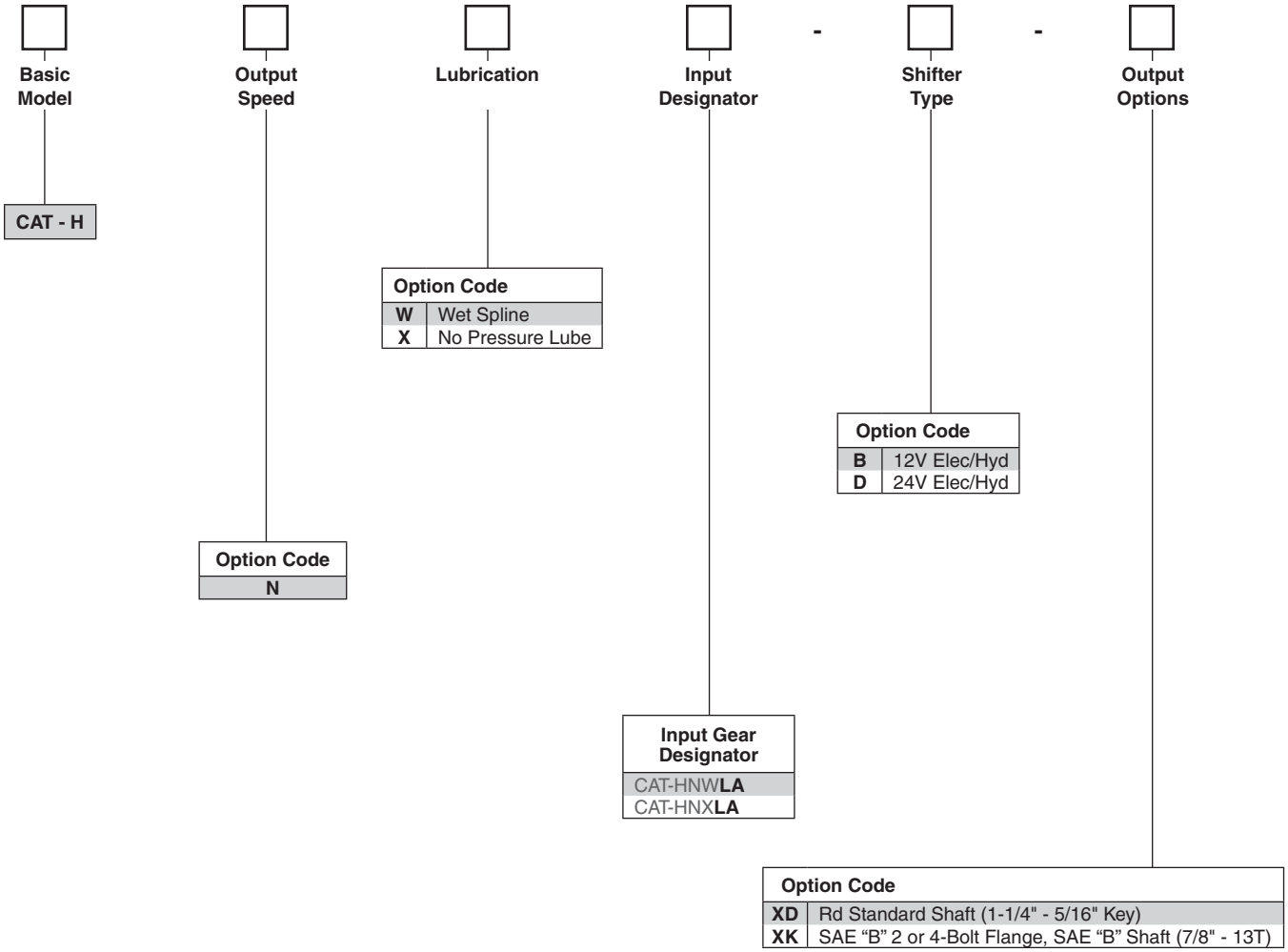

Parker Hannifin Corporation
Chelsea Products Division
Olive Branch, MS 38654 USA



F	21/37
L	25/34
Q	19/24
S	24/22
U	26/20
W	26/17
X	38/21

Option Code	
1	Output Opposite Input
2	Output Same Side as Input

Option Code	
[1]**A**	Air Shift
[1]**P**	12V Elec/Air Shift w/o EOC - Remote
[21]**S**	Air Shift w/ PTO/Dump Pump Combo Valve w/ Kick Out w/ Neutral Spring Return
[21]**T**	Air Shift w/ PTO/Dump Pump Combo Valve w/o Kick Out w/ Neutral Spring Return
[21]**U**	Air Shift w/ PTO/Dump Pump Combo Valve w/ Kick Out w/o Neutral Spring Return
V	Air Shift w/o Installation Kit
[1]**W**	Wire Shift
X	Wire Shift w/o Cable & Knob
C	Special Shift Control & Bracket Kit
H	No Shift Cover Assembly
M	Constant Mesh

Option Code	
AF	SAE “B” 2 or 4-Bolt Flange, SAE “BB” Shaft (1" - 15T)
AK	SAE “B” 2-Bolt Flange, SAE “B” Shaft (7/8" - 13T)
AZ	Non Standard Flange, SAE “C” Shaft (1-1/4" - 14T)
XD	Rd Standard Shaft (1-1/4" - 5/16" Key)
XE	SAE “B” 2 or 4-Bolt Flange, SAE “A” Shaft (5/8" - 9T)
XK	SAE “B” 2 or 4-Bolt Flange, SAE “B” Shaft (7/8" - 13T)
XQ	SAE “B” 2 or 4-Bolt Flange, SAE “B” Shaft (7/8" - 13T)
XR	Chelsea Special (Cloverleaf), SAE “B” Shaft (7/8" - 13T)
XX	1-1/4" Tapered Output Shaft w/ Keyway
XY	ISO 7653 Pump Mount DIN 5462 Shaft
RC	Rotatable SAE “A” 2-Bolt Flange, SAE “A” Shaft (5/8" - 9T)
RD	Rotatable SAE “A” 2-Bolt Flange, SAE “B” Shaft (7/8" - 13T)
RA	Rotatable SAE “B” 2-Bolt Flange, SAE “B” Shaft (7/8" - 13T)
RF	Rotatable SAE “B” 2-Bolt Flange, SAE “BB” Shaft (1" - 15T)
RB	Rotatable SAE “B” 4-Bolt Flange, SAE “B” Shaft (7/8" - 13T)
RE	Rotatable SAE “B” 4-Bolt Flange, SAE “BB” Shaft (1" - 15T)
RY	Rotatable ISO 7653 Pump Mount DIN 5462 Shaft
GA	Greaseable SAE “B” 2-Bolt Rotatable Flange, SAE “B” Shaft (7/8" - 13T)
GH	Greaseable SAE “B” 2-Bolt Rotatable Flange, SAE “BB” Shaft (1" - 15T)
GB	Greaseable SAE “B” 4-Bolt Rotatable Flange, SAE “B” Shaft (7/8" - 13T)
GK	Greaseable SAE “B” 2 or 4-Bolt Flange, SAE “B” Shaft (7/8" - 13T)
GQ	Greaseable SAE “B” 2 or 4-Bolt Flange, SAE “B” Shaft (7/8" - 13T)
GF	Greaseable SAE “B” 2 or 4-Bolt Flange, SAE “BB” Shaft (1" - 15T)
GZ	Greaseable Non Standard Flange, SAE “C” Shaft (1-1/4" - 14T)
GR	Greaseable Chelsea Special (Cloverleaf), SAE “B” Shaft (7/8" - 13T)
GY	Greaseable ISO 7653 Pump Mount DIN 5462 Shaft

[1] Includes mounting parts
[21] Includes installation kit, console sold separately

Parker Hannifin Corporation
Chelsea Products Division
Olive Branch, MS 38654 USA

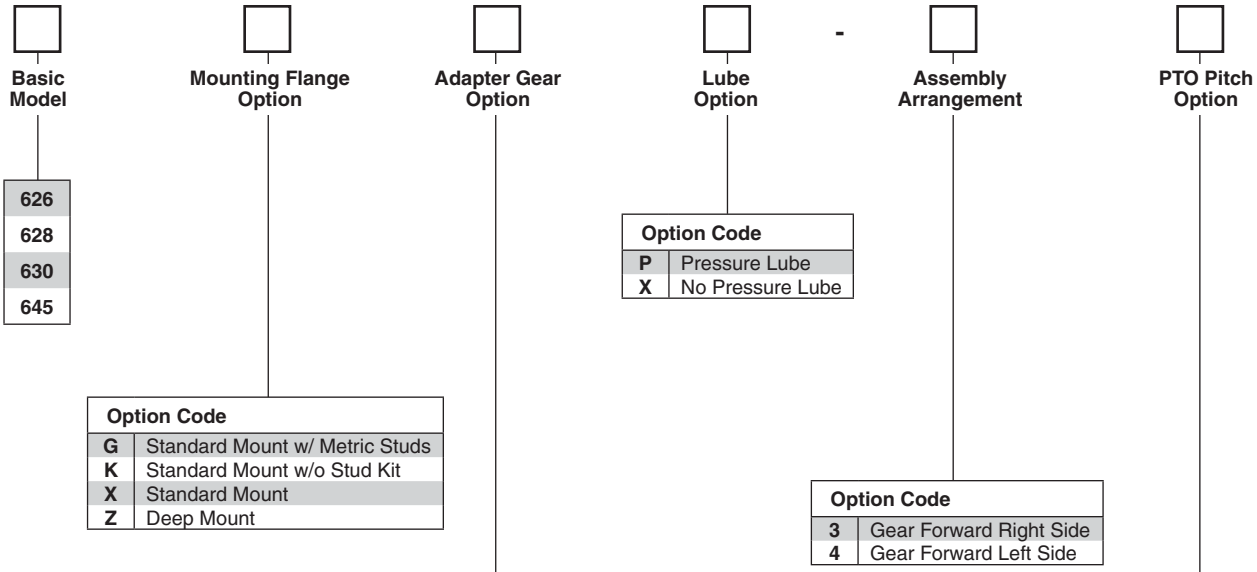

Basic Model
626
628
630
645

Option Code	
P	Pressure Lube
X	No Pressure Lube

Option Code	
G	Standard Mount w/ Metric Studs
K	Standard Mount w/o Stud Kit
X	Standard Mount
Z	Deep Mount

Option Code	
3	Gear Forward Right Side
4	Gear Forward Left Side

Input Gear Designator	Input Gear Part Number
AB	5-P-1001
AH	5-P-1004
AP	5-P-1006
AR	5-P-1008
BG	5-P-1015
BQ	5-P-1023
CD	5-P-1031
DA	5-P-1037
DU	5-P-1050
ED	5-P-1056
ES	5-P-1059
EV	5-P-1060
EW	5-P-1061
FN	5-P-1070
HV	5-P-1300
HY	5-P-1237
JK	5-P-1261
JM	5-P-1263
JU	5-P-1316
JW	5-P-1319
KX	5-P-1411
IT	KIT ADAPTER

Input Gear Designator		Input Gear Part Number
AB	-*AB	5-P-1001
AH	-*AH	5-P-1004
AP	-*GX	5-P-1183
AR	-*GY	5-P-1184
BG	-*HB	5-P-1187
BQ	-*BP	5-P-1022
CD	-*HE	5-P-1190
DA	-*DA	5-P-1037
DU	-*HH	5-P-1193
ED	-*HK	5-P-1195
ES	-*HL	5-P-1196
EV	-*EV	5-P-1060
EW	-*HM	5-P-1197
FN	-*HR	5-P-1201
HY	-*JB	5-P-1244
JK	-*JL	5-P-1262
JM	-*JN	5-P-1264
JU	-*KA	5-P-1318
JW	-*KB	5-P-1321
KX	-*KY	5-P-1412
IT		KIT ADAPTER

Parker Hannifin Corporation
Chelsea Products Division
Olive Branch, MS 38654 USA

Notes

Parker Hannifin Corporation
Chelsea Products Division
Olive Branch, MS 38654 USA

APPLICATIONS

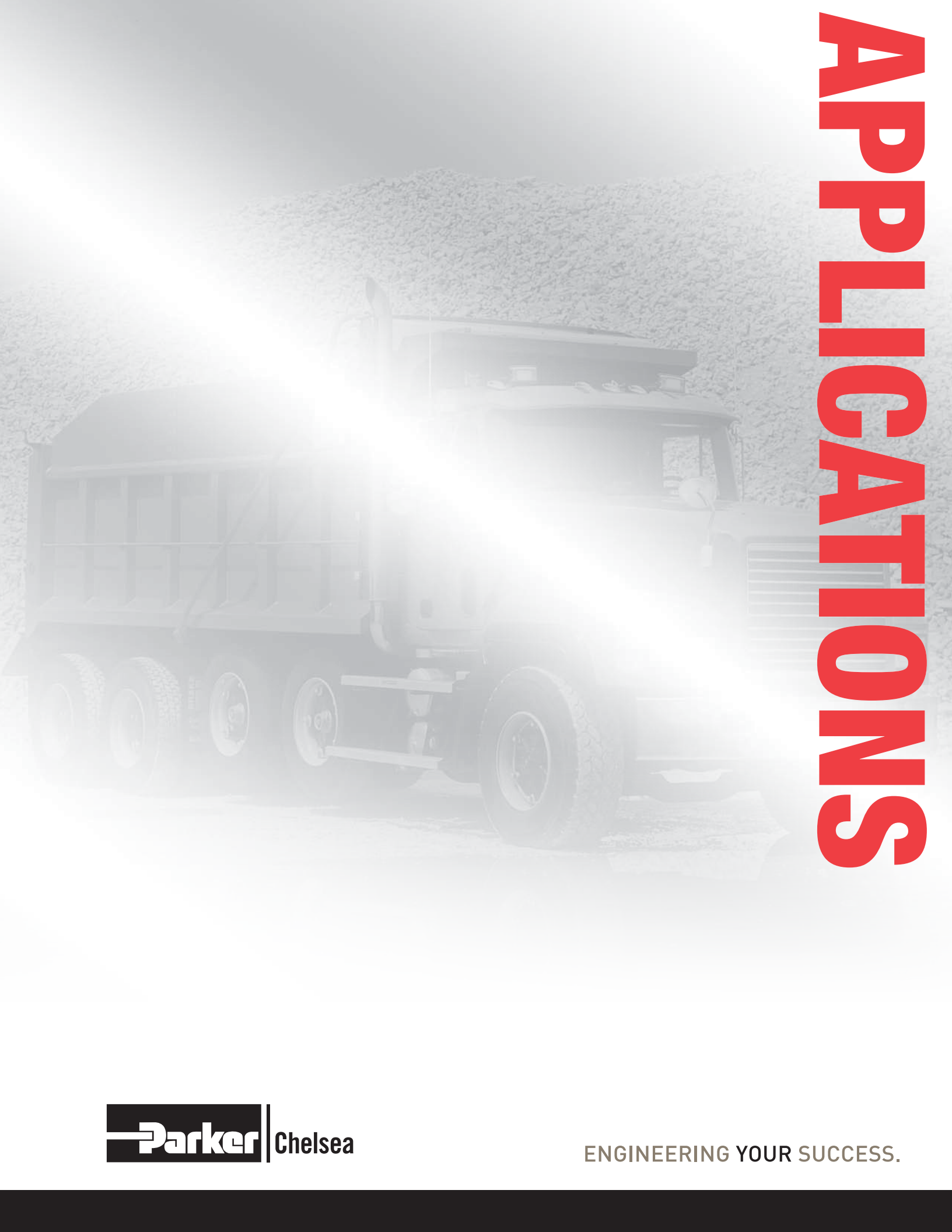

Parker Chelsea

ENGINEERING YOUR SUCCESS.

Parker Hannifin Corporation
Chelsea Products Division
Olive Branch, MS 38654 USA

Aisin ..... 5.1.1 thru 5.1.4
Allison ..... 5.2.1 thru 5.2.60
Caterpillar ..... 5.3.1 thru 5.3.16
Chelsea ..... 5.4.1 thru 5.4.8
Dodge/RAM ..... 5.5.1 thru 5.5.8
Eaton Fuller ..... 5.6.1 thru 5.6.98
Ford ..... 5.7.1 thru 5.7.6
Hino ..... 5.8.1 thru 5.8.8
Isuzu ..... 5.9.1 thru 5.9.10
Mack ..... 5.10.1 thru 5.10.52
Mercedes ..... 5.11.1 thru 5.11.6
Mitsubishi/Fuso ..... 5.12.1 thru 5.12.10
Tremec/TTC ..... 5.13.1 thru 5.13.16
Volvo ..... 5.14.1 thru 5.14.4
ZF ..... 5.15.1 thru 5.15.7

Parker Hannifin Corporation
Chelsea Products Division
Olive Branch, MS 38654 USA

Parker Hannifin Corporation
Chelsea Products Division
Olive Branch, MS 38654 USA

AISIN

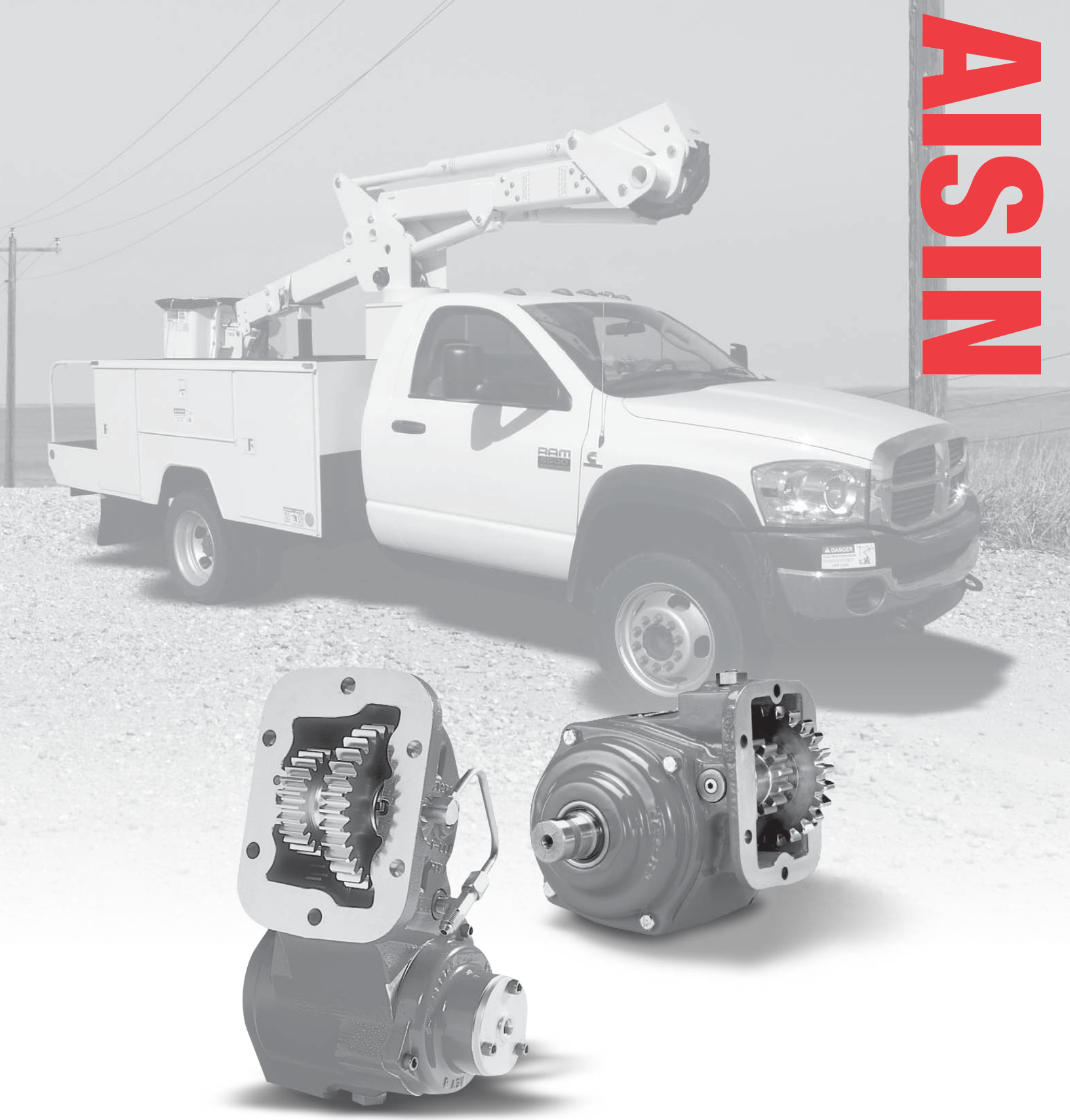

Parker | Chelsea

ENGINEERING YOUR SUCCESS.

⚠ WARNING — User Responsibility

FAILURE OR IMPROPER SELECTION OR IMPROPER USE OF THE PRODUCTS DESCRIBED HEREIN OR RELATED ITEMS CAN CAUSE DEATH, PERSONAL INJURY AND PROPERTY DAMAGE.

This document and other information from Parker-Hannifin Corporation, its subsidiaries and authorized distributors provide product or system options for further investigation by users having technical expertise.

The user, through its own analysis and testing, is solely responsible for making the final selection of the system and components and assuring that all performance, endurance, maintenance, safety and warning requirements of the application are met. The user must analyze all aspects of the application, follow applicable industry standards, and follow the information concerning the product in the current product catalog and in any other materials provided from Parker or its subsidiaries or authorized distributors.

To the extent that Parker or its subsidiaries or authorized distributors provide component or system options based upon data or specifications provided by the user, the user is responsible for determining that such data and specifications are suitable and sufficient for all applications and reasonably foreseeable uses of the components or systems.

Offer of Sale

The items described in this document are hereby offered for sale by Parker Hannifin Corporation, its subsidiaries or its authorized distributors. This offer and its acceptance are governed by the provisions stated in the "Offer of Sale".

© Copyright 2016, Parker Hannifin Corporation, All Rights Reserved

Aisin

Parker Hannifin Corporation
Chelsea Products Division
Olive Branch, MS 38654 USA

Transmission Make and Model	PTO Appl. Number	Number Forward Speeds	Teeth in PTO Driver
A443E	AIS-1	4	L58
A445	AIS-1	4	L58
A465 (Isuzu Number for MY600)	AIS-2	6	L69
MO35A4 (Mitsubishi/Fuso)	AIS-1	4	L58
MO36A4 (Mitsubishi/Fuso Number for MY600)	AIS-2	6	L69
MY600	AIS-2	6	L69

IMPORTANT: See Safety Information in Section 1 of the Chelsea Applications catalog HY25-3000/US.

Transmission PTO Driver & Apertures (Viewed from Rear of Transmission)

L-Left Side R-Right Side B-Bottom Side T-Top Side CS-Countershaft

For transmissions not listed, contact your authorized Chelsea Distributor.

Parker Hannifin Corporation
Chelsea Products Division
Olive Branch, MS 38654 USA

A443E
A445
MO35A4 (Mitsubishi/Fuso)

LEFT SIDE ONLY

TRANSMISSION GEAR DATA:
L.S. 06-BOLT Opening Gear FORWARD of Centerline
58 Teeth - SPUR

PITCH LINE TO APERTURE FACE:
1.0880" (27.6352MM)

Caution: Application Approval Required for PTO Output Shaft Speeds Above 2500 RPM

LEFT Side PTO Model	Inter. Torq.	Dir. Rot.	Engine %		Filler Block	Adapter Assy.	Stud Kit		Inter. Torq.	Dir. Rot.	Engine %		Filler Block	Adapter Assy.	Stud Kit
			Fwd.	Rev.							Fwd.	Rev.			
ONE SPEED - TWO GEAR - POWERSHIFT (HYDRAULIC)															
270AAKUP-*5 (1)	210	Eng	55				Furnished								
270ABKUP-*5 (2)	163	Eng	71				Furnished								
270ADKUP-*5 (3)	139	Eng	82				Furnished								
270AKKUP-*5 (4)	104	Eng	111				Furnished								
270AQKUP-*5 (5)	78	Eng	148				Furnished								

NOTE: When ordering a 270 "A", the hose kit 329246X and metric stud kit 328170-205X are furnished with the PTO. The hose kit and metric stud kit are required for completing the 270 Series installation. The 329246X kit supplies hoses for the low pressure lube, high pressure oil, and drain back oil.

NOTE: The torque ratings shown for the 270 Series are based on the maximum allowable torque capacity of the PTO drive gear in the transmission.

NOTE: To mount the 270 series, a revision to the 6 bolt aperture face had to be made so the input gear of the PTO does not interfere with the transmission case. The revised transmission case will have a serial number of 8D3394 or higher.

(1) Input Gear Part No. 5-P-1353
(2) Input Gear Part No. 5-P-1354
(3) Input Gear Part No. 5-P-1355
(4) Input Gear Part No. 5-P-1356
(5) Input Gear Part No. 5-P-1359

Parker Hannifin Corporation
Chelsea Products Division
Olive Branch, MS 38654 USA

A465 (Isuzu Number for MY600)
MO36A4 (Mitsubishi/Fuso Number for MY600)
MY600

LEFT SIDE ONLY

TRANSMISSION GEAR DATA:
L.S. 06-BOLT Opening Gear FORWARD of Centerline
69 Teeth - SPUR

PITCH LINE TO APERTURE FACE:
1.0880" (27.6352MM)

Caution: Application Approval Required for PTO Output Shaft Speeds Above 2500 RPM

LEFT Side PTO Model	Inter. Torq.	Dir. Rot.	Engine %		Filler Block	Adapter Assy.	Stud Kit		Inter. Torq.	Dir. Rot.	Engine %		Filler Block	Adapter Assy.	Stud Kit
			Fwd.	Rev.							Fwd.	Rev.			
ONE SPEED - TWO GEAR - POWERSHIFT (HYDRAULIC)															
270AAKUP-*5 (1)	167	Eng	65		7-A-032		Furnished								
270ABKUP-*5 (2)	129	Eng	85		7-A-032		Furnished								
270ADKUP-*5 (3)	112	Eng	98		7-A-032		Furnished								
270AKKUP-*5 (4)	82	Eng	132		7-A-032		Furnished								
270AQKUP-*5 (5)	62	Eng	176		7-A-032		Furnished								

NOTE: When ordering the 270 "A", the Hose Kit 329246X and Metric Stud Kit 328170-205X are furnished with the PTO The Hose and Metric Stud Kit are required for completing the 270 Series installation. The 329246X kit supplies the hoses for the low pressure lube, high pressure oil, and drain back oil.

(1) Input Gear Part No. 5-P-1353
(2) Input Gear Part No. 5-P-1354
(3) Input Gear Part No. 5-P-1355
(4) Input Gear Part No. 5-P-1356
(5) Input Gear Part No. 5-P-1359

Parker Hannifin Corporation
Chelsea Products Division
Olive Branch, MS 38654 USA

NOTES



Aisin

Parker Hannifin Corporation
Chelsea Products Division
Olive Branch, MS 38654 USA

ALLISON



Parker | Chelsea

ENGINEERING YOUR SUCCESS.

Allison

⚠ WARNING — User Responsibility

FAILURE OR IMPROPER SELECTION OR IMPROPER USE OF THE PRODUCTS DESCRIBED HEREIN OR RELATED ITEMS CAN CAUSE DEATH, PERSONAL INJURY AND PROPERTY DAMAGE.

This document and other information from Parker-Hannifin Corporation, its subsidiaries and authorized distributors provide product or system options for further investigation by users having technical expertise.

The user, through its own analysis and testing, is solely responsible for making the final selection of the system and components and assuring that all performance, endurance, maintenance, safety and warning requirements of the application are met. The user must analyze all aspects of the application, follow applicable industry standards, and follow the information concerning the product in the current product catalog and in any other materials provided from Parker or its subsidiaries or authorized distributors.

To the extent that Parker or its subsidiaries or authorized distributors provide component or system options based upon data or specifications provided by the user, the user is responsible for determining that such data and specifications are suitable and sufficient for all applications and reasonably foreseeable uses of the components or systems.

Offer of Sale

The items described in this document are hereby offered for sale by Parker Hannifin Corporation, its subsidiaries or its authorized distributors. This offer and its acceptance are governed by the provisions stated in the "Offer of Sale".

© Copyright 2016, Parker Hannifin Corporation, All Rights Reserved

Parker Hannifin Corporation
Chelsea Products Division
Olive Branch, MS 38654 USA

Allison Transmission Identification

In July 2005 Allison Transmission redesigned the transmission nameplates for all 1000/2000 and 3000/4000 Product Family transmissions. The new nameplate design contains only the information essential to the identification of the transmission. The transmission model number will no longer appear on the nameplate, it has been replaced by the serial number.

The transmission product family is identified by the first two digits of the transmission serial number:

Serial Number	Product Family
63xxxxxxxx	1000 and 2000 Product Family
65xxxxxxxx	3000 Product Family
66xxxxxxxx	4000 Product Family

"SP" models will contain additional information to accommodate military applications. The transmission E-number is embossed on the "SP" models and when required for other models sold to the military. The transmission model number is embossed on the nameplate for "SP" model and "MD" and "HD" models sold to the military. The model number will not be embossed for any other model. (Ref: Allison Watch #335 Rev. A)

For further assistance contact Allison Technical Assistance at (800) 252-5283.

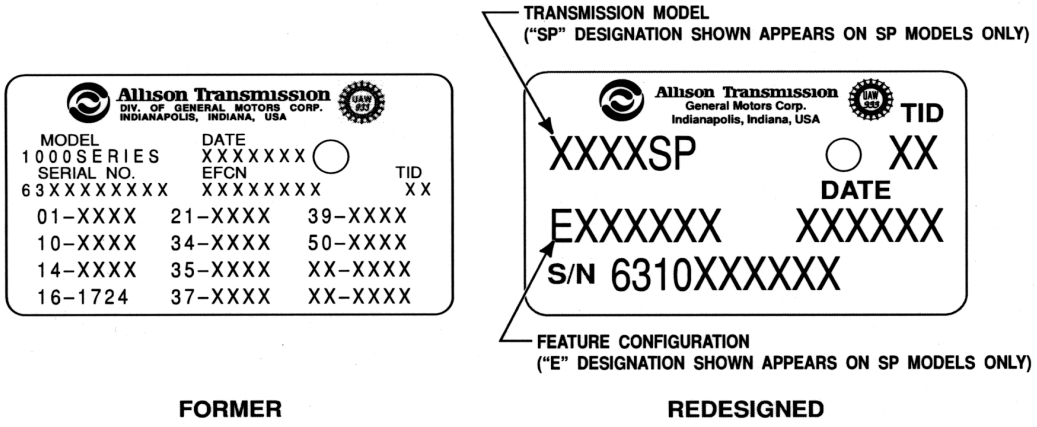

Figure 1. 1000 and 2000 Product Families Nameplates

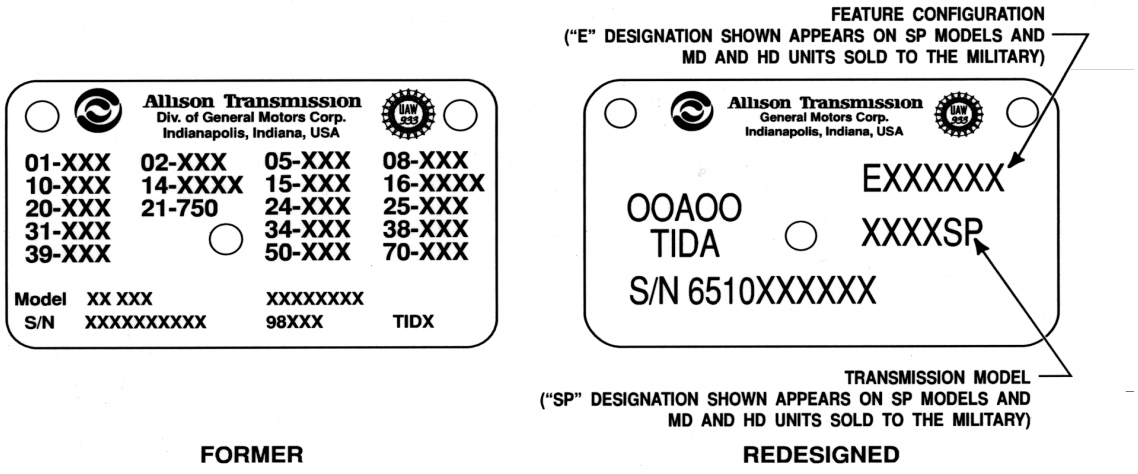

Figure 2. 3000 and 4000 Product Families Nameplates

Allison

890 Family Fitment to Transmission										
Application Page	Arr.	Mounting PTO Code	Transmission Location	Flange Options						
				XS	XK/AF/AZ	XY	DA	ZS/TS	CS/ES	CK/CF/CZ
3000 Series Side/Side										
All-13	5	L	Left side	L	L	L	L	L		
All-13	5	R	Right side	R	R	R	R	R		
All-13C	3	N	Left side w/ Cooler			N		N	N	N
All-13C	5	R	Right side w/ Cooler	R	R	R		R		
All-13R	5	M	Left side w/ Retarder	M	M	M				
All-13R	3	A	Left side w/ Retarder, and Cooler							
All-13R		N/A	Right side w/ Retarder							
3000 Series Side/Top										
All-16	5	E	Left side	E	E	E	E			
All-16	5	T	Right Top side	T	T	T	T			
All-16EV	5	E	Left side (w/o cooler or retarder)	E	E	E	E			
All-16EV	5	T	Right Top side (w/o cooler or retarder)	T	T	T	T			
All-16C	3	D	Left side w/ Cooler			D		D	D	D
All-16C	5	T	Right Top side w/ Cooler	T	T	T	T			
All-16R	5	F	Left side w/ Retarder	F	F	F				
All-16R	3	B	Left side w/ Retarder, and Cooler							
All-16R	5	G	Right Top side w/ Retarder							
4000 Series 6-Speed										
All-14	5	H	Left side	H	H	H	H			
All-14	5	U	Right Top side	U	U	U	U			
All-14C	3	C	Left side w/ Cooler			C		C	C	C
All-14C	5	U	Right Top side w/ Cooler	U	U	U	U			
All-14R	5	P	Left side w/ Retarder		P	P		P		
All-14R	3	J	Left side w/ Retarder			J		J	J	J
All-14R	5	K	Right Top side w/ Retarder	K	K	K				
4000 Series 7-Speed										
All-19	5	H	Left side	H	H	H	H			
All-19	5	U	Right Top side	U	U	U	U			
All-19C	3	C	Left side w/ Cooler			C		C	C	C
All-19C	5	U	Right Top side w/ Cooler	U	U	U	U			
All-19R	5	P	Left side w/ Retarder		P	P		P		
All-19R	3	J	Left side w/ Retarder			J		J	J	J
All-19R	5	K	Right Top side w/ Retarder	K	K	K				

N/A = No Application

Arr. = Assembly Arrangement

Transmission Make and Model	PTO Appl. Number	Number Forward Speeds	Teeth in PTO Driver
1000	ALL-15	5	L64-R64
1000 (GM 3600 Cab-Chassis)	ALL-17	5	R64
1000 EVS	ALL-15	5	L64-R64
1000 MH	ALL-15	5	L64-R64
1000 RDS	ALL-15	5	L64-R64
1350 (Available in 4,5 & 6 Speed)	ALL-15	6	L64-R64
1350 EVS (Available in 4,5 & 6 Speed)	ALL-15	6	L64-R64
1350 MH (Available in 4,5 & 6 Speed)	ALL-15	6	L64-R64
1350 RDS (Available in 4,5 & 6 Speed)	ALL-15	6	L64-R64
1350 SP (Available in 4,5 & 6 Speed)	ALL-15	6	L64-R64
2000	ALL-15	5	L64-R64
2100 EVS	ALL-15	5	L64-R64
2100 MH	ALL-15	5	L64-R64
2100 RDS	ALL-15	5	L64-R64
2200 EVS	ALL-15	5	L64-R64
2200 MH	ALL-15	5	L64-R64
2200 RDS	ALL-15	5	L64-R64
2300 RDS	ALL-15	6	L64-R64
2400	ALL-15	5	L64-R64
2500 EVS	ALL-15	5	L64-R64
2500 MH	ALL-15	5	L64-R64
2500 RDS	ALL-15	5	L64-R64
3000 (3000 Family - Side/Top PTO Provision w/ Retarder)	ALL-16R	6	L83-T83
3000 (3000 Family- Side/Side PTO Provision w/ Retarder)	ALL-13R	6	L68-R68
3000 (3000 Family Side/Top PTO Provision w/ Integral Cooler)	ALL-16C	6	L83-T83
3000 (3000 Family-Side / Side PTO Provision w/ Integral Cooler)	ALL-13C	6	L68-R68
3000 (International - Side/Side PTO Provision)	ALL-13	6	L68-R68
3000 (International - Side/Top PTO Provision)	ALL-16	6	L83-T83
3000 EVS (Emergency Vehicles Only Top / Side PTO Provisions)	ALL-16EV	6	L83-T83
3000 EVS (Side/Side Power Take-Off Provisions)	ALL-13	6	L68-R68
3000 MH	ALL-13	6	L68-R68
3000 ORS (Side/Side Power Take Off - Provisions)	ALL-13	6	L68-R68
3000 ORS (Side/Top PTO Provision)	ALL-16	6	L83-T83
3000 RDS	ALL-13	6	L68-R68
3000 RDS (Side/Top PTO Provision)	ALL-16	5	L83-T83
3000 SP (Side/Side PTO Option)	ALL-13	6	L68-R68

IMPORTANT: See Safety Information in Section 1 of the Chelsea Applications catalog HY25-3000/US.

Transmission PTO Driver & Apertures (Viewed from Rear of Transmission)

L-Left Side R-Right Side B-Bottom Side T-Top Side CS-Countershaft

For transmissions not listed, contact your authorized Chelsea Distributor.

Parker Hannifin Corporation
Chelsea Products Division
Olive Branch, MS 38654 USA

ALLISON TRANSMISSION INDEX

Transmission Make and Model	PTO Appl. Number	Number Forward Speeds	Teeth in PTO Driver
3000 SP (Side/Top PTO Provision)	ALL-16	6	L83-T83
3000 TRV	ALL-13	6	L68-R68
3200 (International - Side/Side PTO Provision)	ALL-13	6	L68-R68
3200 (International - Side/Top PTO Provision)	ALL-16	6	L83-T83
3200 ORS (Side/Side PTO Provision)	ALL-13	6	L68-R68
3200 ORS (Side/Top PTO Provision)	ALL-16	6	L83-T83
3200 SP (Side/Side PTO Provision)	ALL-13	6	L68-R68
3200 SP (Side/Top PTO Provision)	ALL-16	6	L83-T83
3200 TRV	ALL-13	6	L68-R68
3500 (International - Side/Side PTO Provision)	ALL-13	6	L68-R68
3500 (International - Side/Top PTO Provision)	ALL-16	6	L83-T83
3500 EVS (Emergency Vehicles Only Top / Side PTO Provisions)	ALL-16EV	6	L83-T83
3500 EVS (Side/Side Power Take-Off Provisions)	ALL-13	6	L68-R68
3500 OFS	ALL-13	6	L68-R68
3500 ORS (Side/Side PTO Provision)	ALL-13	6	L68-R68
3500 ORS (Side/Top PTO Provision)	ALL-16	6	L83-T83
3500 RDS	ALL-13	6	L68-R68
3500 RDS (Side/Top PTO Provision)	ALL-16	6	L83-T83
3500 SP (Side/Side PTO Provision)	ALL-13	6	L68-R68
3500 SP (Side/Top PTO Provision)	ALL-16	6	L83-T83
3700	ALL-18	7	L68-R68
3700 SP	ALL-18	7	L68-R68
4000 (4000 Family w/ Integral Cooler)	ALL-14C	6	L97-T97
4000 (4000 Family w/ Retarder)	ALL-14R	6	L97-T97
4000 EVS	ALL-14	6	L97-T97
4000 MH	ALL-14	6	L97-T97
4000 RDS	ALL-14	6	L97-T97
4000 TRV	ALL-14	6	L97-T97
4430	ALL-14	6	L97-T97
4430 ORS	ALL-14	6	L97-T97
4430 SP	ALL-14	6	L97-T97
4440	ALL-14	6	L97-T97
4500 EVS	ALL-14	6	L97-T97
4500 RDS	ALL-14	6	L97-T97
4700	ALL-19	7	L97-T97
4700 (4700 Family w/ Integral Cooler)	ALL-19C	7	L97-T97

IMPORTANT: See Safety Information in Section 1 of the Chelsea Applications catalog HY25-3000/US.

Transmission PTO Driver & Apertures (Viewed from Rear of Transmission)

L-Left Side R-Right Side B-Bottom Side T-Top Side CS-Countershaft

For transmissions not listed, contact your authorized Chelsea Distributor.

Parker Hannifin Corporation
Chelsea Products Division
Olive Branch, MS 38654 USA

Transmission Make and Model	PTO Appl. Number	Number Forward Speeds	Teeth in PTO Driver
4700 (4700 Family w/ Retarder)	ALL-19R	7	L97-T97
4700 EVS	ALL-19	7	L97-T97
4700 OFS	ALL-19	7	L97-T97
4700 RDS	ALL-19	7	L97-T97
4700 SP	ALL-19	7	L97-T97
4800	ALL-19	7	L97-T97
4800 (4800 Family w/ Integral Cooler)	ALL-19C	7	L97-T97
4800 (4800 Family w/ Retarder)	ALL-19R	7	L97-T97
4800 EVS	ALL-19	7	L97-T97
4800 SP	ALL-19	7	L97-T97
4850 EVS	ALL-19	7	L97-T97
9817 OFS (Oil Field Service)	ALL-11	8	R59-T59
9823 OFS (Oil Field Service)	ALL-11	8	R59-T59
9826 OFS (Oil Field Service)	ALL-11	8	R59-T59
AT-1542	ALL-4	4	R55
AT-1545	ALL-4	4	R55
AT-540	ALL-4	4	R55
AT-542	ALL-4	4	R55
AT-543	ALL-4	4	R55
AT-545	ALL-4	4	R55
B 300	ALL-13	6	L68-R68
B 400	ALL-13	6	L68-R68
B 500	ALL-14	6	L97-T97
CLBT-750	ALL-6	5	L78
CLBT-750 (With Optional 8-Bolt Opening Ahead of Torque Converter)	ALL-12	5	L64-T40
CLBT-754	ALL-6	5	L78
CLBT-754 (With Optional 8-Bolt Opening Ahead of Torque Converter)	ALL-12	5	L64-T40
CLT-750	ALL-6	5	L78
CLT-750 (With Optional 8-Bolt Opening Ahead of Torque Converter)	ALL-12	5	L64-T40
CLT-754	ALL-6	5	L78
CLT-754 (With Optional 8-Bolt Opening Ahead of Torque Converter)	ALL-12	5	L64-T40
H8610 (H = Hauling Mode)	ALL-11	8	R59-T59
HD-4060P (Close Ratio)	ALL-14	6	L97-T97
HD-4070P	ALL-14	7	L97-T97
HD-4560P (Wide Ratio)	ALL-14	6	L97-T97
HT-740CRD	ALL-6	4	L78

IMPORTANT: See Safety Information in Section I of the Chelsea Applications catalog HY25-3000/US.

Transmission PTO Driver & Apertures (Viewed from Rear of Transmission)

L-Left Side R-Right Side B-Bottom Side T-Top Side CS-Countershaft

For transmissions not listed, contact your authorized Chelsea Distributor.

Parker Hannifin Corporation
Chelsea Products Division
Olive Branch, MS 38654 USA

ALLISON TRANSMISSION INDEX

Transmission Make and Model	PTO Appl. Number	Number Forward Speeds	Teeth in PTO Driver
HT-740D	ALL-6	4	L78
HT-740DRD	ALL-6	4	L78
HT-740T	ALL-6	4	L78
HT-750CRD	ALL-6	5	L78
HT-750CRD (W/Optional 8-Bolt Opening Ahead of Torque Converter)	ALL-12	5	L64-T40
HT-750D	ALL-6	5	L78
HT-750DP	ALL-6	5	L78
HT-750DRD	ALL-6	5	L78
HT-750DT	ALL-6	5	L78
HT-750HT	ALL-6	5	L78
HT-750T	ALL-6	5	L78
HT-754CR	ALL-6	5	L78
M5600 (M = Mobile Mode)	ALL-8	6	R46-T46
M5610 (M = Mobile Mode)	ALL-8	6	R46-T46
M5620 (M = Mobile Mode)	ALL-8	6	R46-T46
M6510 (M = Mobile Mode)	ALL-8	6	R46-T46
M6520 (M = Mobile Mode)	ALL-8	6	R46-T46
M6600 (M = Mobile Mode)	ALL-8	6	R46-T46
M8610 (M = Mobile Mode)	ALL-11	8	R59-T59
M9600 (M = Mobile Mode)	ALL-11	6	R59-T59
M9800 (M = Mobile Mode)	ALL-11	8	R59-T59
MD3050CR-P	ALL-13	5	L68-R68
MD-3060P (Close Ratio)	ALL-13	6	L68-R68
MD-3060PR (Close Ratio)	ALL-13	6	L68-R68
MD-3066P (Europe Only)	ALL-16	6	L83-T83
MD-3070P (Close Ratio)	ALL-18	7	L68-R68
MD-3560P (Wide Ratio)	ALL-13	6	L68-R68
MD-3560PR (Wide Ratio)	ALL-13	6	L68-R68
MT-640	ALL-5	4	R64
MT-643	ALL-5	4	R64
MT-644	ALL-5	4	R64
MT-650	ALL-5	5	R64
MT-653	ALL-5	5	R64
MT-654	ALL-5	5	R64
S5600 (S = Stationary Mode)	ALL-8	6	R46-T46
S5610 (S = Stationary Mode)	ALL-8	6	R46-T46

IMPORTANT: See Safety Information in Section 1 of the Chelsea Applications catalog HY25-3000/US.

Transmission PTO Driver & Apertures (Viewed from Rear of Transmission)

L-Left Side R-Right Side B-Bottom Side T-Top Side CS-Countershaft

For transmissions not listed, contact your authorized Chelsea Distributor.

Parker Hannifin Corporation
Chelsea Products Division
Olive Branch, MS 38654 USA

Transmission Make and Model	PTO Appl. Number	Number Forward Speeds	Teeth in PTO Driver
S5620 (S= Stationary Mode)	ALL-8	6	R46-T46
S6510 (S = Stationary Mode)	ALL-8	6	R46-T46
S6520 (S = Stationary Mode)	ALL-8	6	R46-T46
S6600 (S = Stationary Mode)	ALL-8	6	R46-T46
TC-10	ALL-20	10	CS

IMPORTANT: See Safety Information in Section 1 of the Chelsea Applications catalog HY25-3000/US.

Transmission PTO Driver & Apertures (Viewed from Rear of Transmission)

L-Left Side R-Right Side B-Bottom Side T-Top Side CS-Countershaft

For transmissions not listed, contact your authorized Chelsea Distributor.

Parker Hannifin Corporation
Chelsea Products Division
Olive Branch, MS 38654 USA

AT-1542
AT-1545
AT-540
AT-542
AT-543
AT-545

RIGHT SIDE ONLY

TRANSMISSION GEAR DATA:
R.S. 06-BOLT Opening Gear FORWARD of Centerline
55 Teeth - SPUR

PITCH LINE TO APERTURE FACE:
1.0850" (27.5600MM)

Caution: Application Approval Required for PTO Output Shaft Speeds Above 2500 RPM

	Inter. Torq.	Dir. Rot.	Engine % Fwd.	Engine % Rev.	Filler Block	Adapter Assy.	Stud Kit	RIGHT Side PTO Model	Inter. Torq.	Dir. Rot.	Engine % Fwd.	Engine % Rev.	Filler Block	Adapter Assy.	Stud Kit
ONE SPEED - TWO GEAR - MECHANICAL SHIFT															
								221XCAJP-*3 (4)	235	Eng	106				Furnished
								221XEAJP-*3 (4)	212	Eng	118				Furnished
								442XBAHP-*3 (1)	250	Eng	90				Furnished
ONE SPEED - TWO GEAR POWERSHIFT (AIR OR HYDRAULIC)															
								272XAAJP-*3	250	Eng	79				Furnished
								272XBAJP-*3	250	Eng	97				Furnished
								272XCAJP-*3	250	Eng	117				Furnished
								272XGAJP-*3	250	Eng	166				Furnished
								272XKAJP-*3	250	Eng	186				Furnished
ONE SPEED - TWO GEAR - POWERSHIFT (AIR)															
								230XAAJP-*3 (2)	300	Eng	75				Furnished
								230XBAJP-*3 (3)	250	Eng	97				Furnished
								230XDAJP-*3 (5)	222	Eng	112				Furnished
								230XKAJP-*3 (6)	165	Eng	152				Furnished
								230XQAJP-*3 (7)	125	Eng	202				Furnished
								231MAAJP-*5 (2)	250	Eng	75				Furnished
								231MBAJP-*5 (3)	250	Eng	97				Furnished
								231MDAJP-*5 (5)	222	Eng	112				Furnished
								231MKAJP-*5 (6)	165	Eng	152				Furnished
								231MQAJP-*5 (7)	125	Eng	202				Furnished
ONE SPEED - TWO GEAR - POWERSHIFT (HYDRAULIC)															
								270XAAJP-*3 (2)	300	Eng	75				Furnished
								270XBAJP-*3 (3)	250	Eng	97				Furnished
								270XDAJP-*3 (5)	222	Eng	112				Furnished
								270XKAJP-*3 (6)	165	Eng	152				Furnished
								270XQAJP-*3 (7)	125	Eng	202				Furnished
								271MAAJP-*5 (2)	250	Eng	75				Furnished
								271MBAJP-*5 (3)	250	Eng	97				Furnished

Continued Next Page

CAUTION: PTO output shaft torque ratings are based on the maximum intermittant torque rating of 250 lb-ft torque for the 55 tooth gear in the AT-540 series transmission.

NOTE: Speeds shown are with engine RPM at or above torque converter lockup speed. If the PTO is going to be operated below torque converter lockup speeds, contact your CHELSEA distributor for specific speeds and torque requirements.

NOTE: 378840 street tee required for pressure lube and must be purchased separately. Only the pressure lube line 328075X (line to the idler pin) is included with the PTO For 270/271 Series due to varying valve installation locations on the vehicle installer must supply the following hoses or order the following separately. One 329087X (line from tranny to valve) and two 328075X (valve dump back to PTO housing & valve to PTO clutch).

NOTE: The "AJ" input gear designator shown on this application, which is a full addendum 6-pitch gear, is recommended for use on these transmissions. The "AH" input gear designator, which is a 6/8-pitch gear, can also be used on these transmissions; however, you may notice some additional rattle between the meshing gears.

NOTE: Do not use adapter gear assemblies on any Allison automatic transmissions.

NOTE: 272 Series stated torque values on this page are for Intermittent and Continuous Duty Applications.

NOTE: 272 Series PTOs ordered with Pressure Lube and Hyd Shift will be supplied with (1) Lube Hose and (1) Shift Hose.

(1) Input Gear Part No. 5-P-1418
(2) Input Gear Part No. 5-P-567
(3) Input Gear Part No. 5-P-568
(4) Input Gear Part No. 5-P-569
(5) Input Gear Part No. 5-P-695
(6) Input Gear Part No. 5-P-769
(7) Input Gear Part No. 5-P-770

Parker Hannifin Corporation
Chelsea Products Division
Olive Branch, MS 38654 USA

AT-1542
AT-1545
AT-540
AT-542
AT-543
AT-545

RIGHT SIDE ONLY

TRANSMISSION GEAR DATA:
R.S. 06-BOLT Opening Gear FORWARD of Centerline
55 Teeth - SPUR

PITCH LINE TO APERTURE FACE:
1.0850" (27.5600MM)

Caution: Application Approval Required for PTO Output Shaft Speeds Above 2500 RPM

	Inter. Torq.	Dir. Rot.	Engine %		Filler Block	Adapter Assy.	Stud Kit	RIGHT Side PTO Model	Inter. Torq.	Dir. Rot.	Engine %		Filler Block	Adapter Assy.	Stud Kit
			Fwd.	Rev.							Fwd.	Rev.			
ONE SPEED - TWO GEAR - POWERSHIFT (HYDRAULIC)															
								271MDAJP-*5 (5)	222	Eng	112				Furnished
								271MKAJP-*5 (6)	165	Eng	152				Furnished

CAUTION: PTO output shaft torque ratings are based on the maximum intermittant torque rating of 250 lb-ft torque for the 55 tooth gear in the AT-540 series transmission.

NOTE: Speeds shown are with engine RPM at or above torque converter lockup speed. If the PTO is going to be operated below torque converter lockup speeds, contact your CHELSEA distributor for specific speeds and torque requirements.

NOTE: 378840 street tee required for pressure lube and must be purchased separately. Only the pressure lube line 328075X (line to the idler pin) is included with the PTO For 270/271 Series due to varying valve installation locations on the vehicle installer must supply the following hoses or order the following separately. One 329087X (line from tranny to valve) and two 328075X (valve dump back to PTO housing & valve to PTO clutch).

NOTE: The "AJ" input gear designator shown on this application, which is a full addendum 6-pitch gear, is recommended for use on these transmissions. The "AH" input gear designator, which is a 6/8-pitch gear, can also be used on these transmissions; however, you may notice some additional rattle between the meshing gears.

NOTE: Do not use adapter gear assemblies on any Allison automatic transmissions.

NOTE: 272 Series stated torque values on this page are for Intermittent and Continuous Duty Applications.

NOTE: 272 Series PTOs ordered with Pressure Lube and Hyd Shift will be supplied with (1) Lube Hose and (1) Shift Hose.

(5) Input Gear Part No. 5-P-695
(6) Input Gear Part No. 5-P-769

Parker Hannifin Corporation
Chelsea Products Division
Olive Branch, MS 38654 USA

MT-640
MT-643
MT-644
MT-650
MT-653
MT-654

RIGHT SIDE ONLY

TRANSMISSION GEAR DATA:
R.S. 06-BOLT Opening Gear FORWARD of Centerline
64 Teeth - SPUR

PITCH LINE TO APERTURE FACE:
1.0850" (27.5600MM)

Caution: Application Approval Required for PTO Output Shaft Speeds Above 2500 RPM

	Inter. Torq.	Dir. Rot.	Engine % Fwd.	Engine % Rev.	Filler Block	Adapter Assy.	Stud Kit	RIGHT Side PTO Model	Inter. Torq.	Dir. Rot.	Engine % Fwd.	Engine % Rev.	Filler Block	Adapter Assy.	Stud Kit
ONE SPEED - TWO GEAR - MECHANICAL SHIFT															
								221XCAJP-*3	250	Eng	124				Furnished
								221XEAJP-*3	250	Eng	137				Furnished
								442XBAHP-*5 (1)	250	Eng	104				Furnished
ONE SPEED - TWO GEAR POWERSHIFT (AIR OR HYDRAULIC)															
								272XAAJP-*3	300	Eng	92				Furnished
								272XBAJP-*3	300	Eng	113				Furnished
								272XCAJP-*3	300	Eng	136				Furnished
								272XDAJX-*3	300	Eng	164				Furnished
								272XGAJP-*3	300	Eng	194				Furnished
ONE SPEED - TWO GEAR - POWERSHIFT (AIR)															
								230XAAJP-*3	300	Eng	87				Furnished
								230XBAJP-*3	300	Eng	113				Furnished
								230XDAJP-*3	300	Eng	131				Furnished
								230XKAJP-*3	300	Eng	177				Furnished
								230XQAJP-*3	300	Eng	235				Furnished
								231MAAJP-*5	250	Eng	87				Furnished
								231MBAJP-*5	250	Eng	113				Furnished
								231MDAJP-*5	250	Eng	131				Furnished
								231MKAJP-*5	250	Eng	177				Furnished
								231MQAJP-*5	250	Eng	235				Furnished
ONE SPEED - TWO GEAR - POWERSHIFT (HYDRAULIC)															
								270XAAJP-*3	300	Eng	87				Furnished
								270XBAJP-*3	300	Eng	113				Furnished
								270XDAJP-*3	300	Eng	131				Furnished
								270XKAJP-*3	300	Eng	177				Furnished
								271MAAJP-*5	250	Eng	87				Furnished
								271MBAJP-*5	250	Eng	113				Furnished
								271MDAJP-*5	250	Eng	131				Furnished
								271MKAJP-*5	250	Eng	177				Furnished

NOTE: If the 270/271/272/230/231 Series is ordered with the Drag Brake option the rear cover of the PTO will interfere with the transmission clutch housing.

NOTE: Do not use adapter gear assemblies on any Allison automatic transmissions.

NOTE: Speeds shown are with engine RPM at, or above, torque converter lockup speed. If the PTO is going to be operated below torque converter lockup speeds, contact your CHELSEA distributor for specific speeds and torque requirements.

NOTE: 378970 street tee required for pressure lube for 1975 and after, and must be purchased separately. 378880 street tee required for pressure lube prior to 1975. Only the pressure lube line 328075X (line to the idler pin) is included with the PTO For 270/271 Series due to varying valve installation locations on the vehicle installer must supply the following hoses or order the following separately. One 329087X (line from tranny to valve) and two 328075X (valve dump back to PTO housing & valve to PTO clutch).

NOTE: The "AJ" input gear designator shown on this application, which is a full addendum 6-pitch gear, is recommended for use on these transmissions. The "AH" input gear designator, which is a 6/8-pitch gear, can also be used on these transmissions; however, you may notice some additional rattle between the meshing gears.

NOTE: 272 Series stated torque values on this page are for Intermittent and Continuous Duty Applications.

NOTE: 442 SERIES - The 442 listed above is a bulge up arrangement and pump clearance must be verified by the installer. The 442*3 arrangement has interefernce issues with the idler pin lube fitting against the bell housing.

(1) Input Gear Part No. 5-P-1418

Parker Hannifin Corporation
Chelsea Products Division
Olive Branch, MS 38654 USA

CLBT-750	HT-750D
CLT-750	HT-750DP
CLT-754	HT-750DRD
HT-740CRD	HT-750DT
HT-740D	HT-750HT
HT-740DRD	HT-750T
HT-740T	HT-754CR
HT-750CRD	CLBT-754

LEFT SIDE ONLY

TRANSMISSION GEAR DATA:
L.S. 06-BOLT Opening Gear FORWARD of Centerline
78 Teeth - SPUR

PITCH LINE TO APERTURE FACE:
1.0850" (27.5600MM)

Caution: Application Approval Required for PTO Output Shaft Speeds Above 2500 RPM

LEFT Side PTO Model	Inter. Torq.	Dir. Rot.	Engine % Fwd.	Engine % Rev.	Filler Block	Adapter Assy.	Stud Kit
ONE SPEED - TWO GEAR - MECHANICAL SHIFT							
221XCAJP-*5	250	Eng	151				Furnished
221XEAJP-*5	250	Eng	167				Furnished
442XBAHP-*5 (1)	250	Eng	127				Furnished
ONE SPEED - TWO GEAR POWERSHIFT (AIR OR HYDRAULIC)							
272XAAJP-*5	300	Eng	112				Furnished
272XBAJP-*5	300	Eng	137				Furnished
272XCAJP-*5	300	Eng	166				Furnished
ONE SPEED - TWO GEAR - POWERSHIFT (AIR)							
230XAAJP-*5	300	Eng	106				Furnished
230XBAJP-*5	300	Eng	138				Furnished
230XDAJP-*5	300	Eng	159				Furnished
230XKAJP-*5	300	Eng	215				Furnished
230XQAJP-*5	300	Eng	287				Furnished
231MAAJP-*5	250	Eng	106				Furnished
231MBAJP-*5	250	Eng	138				Furnished
231MDAJP-*5	250	Eng	159				Furnished
231MKAJP-*5	250	Eng	215				Furnished
231MQAJP-*5	250	Eng	287				Furnished
ONE SPEED - TWO GEAR - POWERSHIFT (HYDRAULIC)							
270XAAJP-*5	300	Eng	106				Furnished
270XBAJP-*5	300	Eng	138				Furnished
270XDAJP-*5	300	Eng	159				Furnished
270XKAJP-*5	300	Eng	215				Furnished
271MAAJP-*5	250	Eng	106				Furnished
271MBAJP-*5	250	Eng	138				Furnished
271MDAJP-*5	250	Eng	159				Furnished
271MKAJP-*5	250	Eng	215				Furnished

LEFT Side PTO Model	Inter. Torq.	Dir. Rot.	Engine % Fwd.	Engine % Rev.	Filler Block	Adapter Assy.	Stud Kit

NOTE: Do not use adapter gear assemblies on any Allison automatic transmissions.

NOTE: Speeds shown are with engine RPM at, or above, torque converter lockup speed. If the PTO is going to be operated below torque converter lockup speeds, contact your CHELSEA distributor for specific speeds and torque requirements.

NOTE: 378897 street tee required for pressure lube and must be purchased separately. Only the pressure lube line 328075X (line to the idler pin) is included with the PTO For 270/271 Series due to varying valve installation locations on the vehicle installer must supply the following hoses or order the following separately. One 329087X (line from tranny to valve) and two 328075X (valve dump back to PTO housing & valve to PTO clutch).

NOTE: Aperture is located at 10 o'clock when viewed from rear of transmission.

NOTE: The "AJ" input gear designator shown on this application, which is a full addendum 6-pitch gear, is recommended for use on these transmissions. The "AH" input gear designator, which is a 6/8-pitch gear, can also be used on these transmissions; however, you may notice some additional rattle between the meshing gears.

NOTE: 272 Series stated torque values on this page are for Intermittent and Continuous Duty Applications.

(1) Input Gear Part No. 5-P-1418

Parker Hannifin Corporation
Chelsea Products Division
Olive Branch, MS 38654 USA

S6600 (S = Stationary Mode)
M6600 (M = Mobile Mode)
M5600 (M = Mobile Mode)
S5600 (S = Stationary Mode)
M5610 (M = Mobile Mode)
M5620 (M = Mobile Mode)
M6510 (M = Mobile Mode)
M6520 (M = Mobile Mode)

S5610 (S = Stationary Mode)
S5620 (S= Stationary Mode)
S6510 (S = Stationary Mode)
S6520 (S = Stationary Mode)

TOP SIDE ONLY

TRANSMISSION GEAR DATA:
TOP 08-BOLT Opening Gear REAR of Centerline
46 Teeth - SPUR

PITCH LINE TO APERTURE FACE:
0.8020" (20.3708MM)

RIGHT SIDE ONLY

TRANSMISSION GEAR DATA:
R.S. 08-BOLT Opening Gear REAR of Centerline
46 Teeth - SPUR

PITCH LINE TO APERTURE FACE:
0.8020" (20.3708MM)

Caution: Application Approval Required for PTO Output Shaft Speeds Above 2500 RPM

TOP Side PTO Model	Inter. Torq.	Dir. Rot.	Engine % Fwd.	Engine % Rev.	Filler Block	Adapter Assy.	Stud Kit	RIGHT Side PTO Model	Inter. Torq.	Dir. Rot.	Engine % Fwd.	Engine % Rev.	Filler Block	Adapter Assy.	Stud Kit
ONE SPEED - TWO GEAR - MECHANICAL SHIFT															
221ZCAKP-*6	250	Opp	89			328564X	Furnished	221ZCAKP-*4	250	Eng	89			328564X	Furnished
221ZEAKP-*6	250	Opp	99			328564X	Furnished	221ZEAKP-*4	250	Eng	99			328564X	Furnished
823XBAKP-*6 (6)	500	Opp	81				Furnished	823XBAKP-*4 (6)	500	Eng	81				Furnished
823XDAKP-*6 (9)	500	Opp	96				Furnished	823XDAKP-*4 (9)	500	Eng	96				Furnished
823XGAKP-*6 (10)	500	Opp	104				Furnished	823XGAKP-*4 (10)	500	Eng	104				Furnished
823XJAKP-*6 (7)	500	Opp	122				Furnished	880XBAKP-*4 (1)	500	Eng	81				Furnished
823XMAKP-*6 (8)	500	Opp	144				Furnished	880XDAKP-*4 (2)	500	Eng	96				Furnished
880XBAKP-*6 (1)	500	Opp	81				Furnished	880XGAKP-*4 (3)	500	Eng	104				Furnished
880XDAKP-*6 (2)	500	Opp	96				Furnished								
880XGAKP-*6 (3)	500	Opp	104				Furnished								
880XJAKP-*6 (4)	500	Opp	122				Furnished								
880XMAKP-*6 (5)	500	Opp	144				Furnished								
ONE SPEED - TWO GEAR - POWERSHIFT (AIR)															
885XBAKP-*6 (1)	500	Opp	81				Furnished	885XBAKP-*4 (1)	500	Eng	81				Furnished
885XGAKP-*6 (3)	500	Opp	104				Furnished	885XGAKP-*4 (3)	500	Eng	104				Furnished
885XJAKP-*6 (4)	500	Opp	122				Furnished								
885XMAKP-*6 (5)	500	Opp	144				Furnished								
ONE SPEED - TWO GEAR - POWERSHIFT (HYDRAULIC)															
270XAAKP-*6	250	Opp	62			328481X	Furnished	270XAAKP-*4	300	Eng	62			328481X(B)	Furnished
270XDAKP-*6	250	Opp	94			328481X	Furnished	270XDAKP-*4	300	Eng	94			328481X(B)	Furnished
270XKAKP-*6	225	Opp	127			328481X	Furnished	270XKAKP-*4	300	Eng	127			328481X(B)	Furnished
852XBAKP-*6	500	Opp	81				Furnished	852XBAKP-*4	500	Eng	81				Furnished
852XGAKP-*6	500	Opp	104				Furnished	852XGAKP-*4	500	Eng	104				Furnished
852XJAKP-*6	500	Opp	122				Furnished	852XJAKP-*4	500	Eng	122				Furnished

CAUTION: Maximum PTO Continuous torque allowed is 313 Ft.lbs [424 Nm] due to the transmission manufacturer PTO driver gear limit.

NOTE: CRT-5630 & 5631 have only RH openings.

NOTE: Right Side opening is optional. Input gear interference prohibits use of any PTOs other than those shown.

NOTE: Do not use geared adapter assemblies on any Allison Automatic Transmission.

NOTE: Only the pressure lube line 328075X (line to the idler pin) is included with the PTO For 270/271 Series due to varying valve installation locations on the vehicle installer must supply the following hoses or order the following separately. One 329087X (line from tranny to valve) and two 328075X (valve dump back to PTO housing & valve to PTO clutch).

(1) Input Gear Part No. 5-P-1106
(2) Input Gear Part No. 5-P-1107
(3) Input Gear Part No. 5-P-1108
(4) Input Gear Part No. 5-P-1109
(5) Input Gear Part No. 5-P-1110
(6) Input Gear Part No. 5-P-223
(7) Input Gear Part No. 5-P-224
(8) Input Gear Part No. 5-P-284
(9) Input Gear Part No. 5-P-293
(10) Input Gear Part No. 5-P-294

Parker Hannifin Corporation
Chelsea Products Division
Olive Branch, MS 38654 USA

9817 OFS (Oil Field Service)
9823 OFS (Oil Field Service)
9826 OFS (Oil Field Service)
H8610 (H = Hauling Mode)
M8610 (M = Mobile Mode)
M9600 (M = Mobile Mode)
M9800 (M = Mobile Mode)

TOP SIDE ONLY

TRANSMISSION GEAR DATA:
TOP 08-BOLT Opening Gear REAR of Centerline
59 Teeth - SPUR

PITCH LINE TO APERTURE FACE:
0.8100" (20.5740MM)

RIGHT SIDE ONLY

TRANSMISSION GEAR DATA:
R.S. 08-BOLT Opening Gear REAR of Centerline
59 Teeth - SPUR

PITCH LINE TO APERTURE FACE:
0.8100" (20.5740MM)

Caution: Application Approval Required for PTO Output Shaft Speeds Above 2500 RPM

TOP Side PTO Model	Inter. Torq.	Dir. Rot.	Engine % Fwd.	Engine % Rev.	Filler Block	Adapter Assy.	Stud Kit	RIGHT Side PTO Model	Inter. Torq.	Dir. Rot.	Engine % Fwd.	Engine % Rev.	Filler Block	Adapter Assy.	Stud Kit
ONE SPEED - TWO GEAR - MECHANICAL SHIFT															
823XBAKP-*6 (6)	500	Opp	104				Furnished	823XBAKP-*4 (6)	500	Eng	104				Furnished
823XDAKP-*6 (9)	500	Opp	123				Furnished	823XDAKP-*4 (9)	500	Eng	123				Furnished
823XGAKP-*6 (10)	500	Opp	134				Furnished	880XBAKP-*4 (1)	500	Eng	104				Furnished
823XJAKP-*6 (7)	500	Opp	157				Furnished	880XDAKP-*4 (2)	500	Eng	123				Furnished
823XMAKP-*6 (8)	500	Opp	185				Furnished	880XGAKP-*4 (3)	500	Eng	134				Furnished
880XBAKP-*6 (1)	500	Opp	104				Furnished	880XJAKP-*4 (4)	500	Eng	157				Furnished
880XDAKP-*6 (2)	500	Opp	123				Furnished								
880XGAKP-*6 (3)	500	Opp	134				Furnished								
880XJAKP-*6 (4)	500	Opp	157				Furnished								
880XMAKP-*6 (5)	500	Opp	185				Furnished								
ONE SPEED - TWO GEAR - POWERSHIFT (HYDRAULIC)															
852XBAKP-*6	500	Opp	104				Furnished	852XBAKP-*4	500	Eng	104				Furnished
852XGAKP-*6	500	Opp	134				Furnished	852XGAKP-*4	500	Eng	134				Furnished
852XJAKP-*6	500	Opp	157				Furnished	852XJAKP-*4	500	Eng	157				Furnished

NOTE: RH opening is optional. Input gear interference prohibits use of any PTO other than those shown.

NOTE: Do not use geared adapter assemblies on any Allison Automatic Transmission.

NOTE: Use a 3/8" NPT to 1/4" NPT pipe reducer to adapt to the pressure lube hose supplied with the unit.

NOTE: The "CLT or CLBT" prefix refers to an engine driven section mounted to the front of the transmission.

NOTE: The 8000 and 9000 Series transmission models use all the same PTO models.

NOTE: Only the pressure lube line 328075X (line to the idler pin) is included with the PTO.

NOTE: The PTO input gear mates to a transmission PTO idler gear, the top opening will have 39 teeth and the side opening will have 52 teeth. These idler gears are driven from the 59 tooth PTO drive gear.

(1) Input Gear Part No. 5-P-1106
(2) Input Gear Part No. 5-P-1107
(3) Input Gear Part No. 5-P-1108
(4) Input Gear Part No. 5-P-1109
(5) Input Gear Part No. 5-P-1110
(6) Input Gear Part No. 5-P-223
(7) Input Gear Part No. 5-P-224
(8) Input Gear Part No. 5-P-284
(9) Input Gear Part No. 5-P-293
(10) Input Gear Part No. 5-P-294

Parker Hannifin Corporation
Chelsea Products Division
Olive Branch, MS 38654 USA

CLT-750 (With Optional 8-Bolt Opening Ahead of Torque Converter)
CLT-754 (With Optional 8-Bolt Opening Ahead of Torque Converter)
HT-750CRD (W/Optional 8-Bolt Opening Ahead of Torque Converter)
CLBT-750 (With Optional 8-Bolt Opening Ahead of Torque Converter)
CLBT-754 (With Optional 8-Bolt Opening Ahead of Torque Converter)

LEFT SIDE ONLY

TRANSMISSION GEAR DATA:
L.S. 08-BOLT Opening Gear REAR of Centerline
64 Teeth - SPUR

PITCH LINE TO APERTURE FACE:
0.8100" (20.5740MM)

TOP SIDE ONLY

TRANSMISSION GEAR DATA:
TOP 08-BOLT Opening Gear REAR of Centerline
40 Teeth - SPUR

PITCH LINE TO APERTURE FACE:
0.8100" (20.5740MM)

Caution: Application Approval Required for PTO Output Shaft Speeds Above 2500 RPM

LEFT Side PTO Model	Inter. Torq.	Dir. Rot.	Engine % Fwd.	Engine % Rev.	Filler Block	Adapter Assy.	Stud Kit	TOP Side PTO Model	Inter. Torq.	Dir. Rot.	Engine % Fwd.	Engine % Rev.	Filler Block	Adapter Assy.	Stud Kit
ONE SPEED - TWO GEAR - MECHANICAL SHIFT															
221ZCAKX-*6	250	Opp	104			328564X	Furnished	221ZCAKP-*4	250	Opp	104			328564X	Furnished
221ZEAKX-*6	250	Opp	116			328564X	Furnished	221ZEAKP-*4	250	Opp	116			328564X	Furnished
823XBAKX-*6 (6)	500	Opp	95				Furnished	823XBAKP-*4 (6)	500	Opp	95				Furnished
823XDAKX-*6 (9)	500	Opp	113				Furnished	823XDAKP-*4 (9)	500	Opp	112				Furnished
823XGAKX-*6 (10)	500	Opp	122				Furnished	823XGAKP-*4 (10)	500	Opp	122				Furnished
823XJAKX-*6 (7)	500	Opp	144				Furnished	823XJAKP-*4 (7)	500	Opp	144				Furnished
823XMAKX-*6 (8)	500	Opp	169				Furnished	823XMAKP-*4 (8)	500	Opp	169				Furnished
880XBAKX-*6 (1)	500	Opp	95				Furnished	880XBAKP-*4 (1)	500	Opp	95				Furnished
880XDAKX-*6 (2)	500	Opp	113				Furnished	880XDAKP-*4 (2)	500	Opp	112				Furnished
880XGAKX-*6 (3)	500	Opp	122				Furnished	880XGAKP-*4 (3)	500	Opp	122				Furnished
880XJAKX-*6 (4)	500	Opp	144				Furnished	880XJAKP-*4 (4)	500	Opp	144				Furnished
880XMAKX-*6 (5)	500	Opp	169				Furnished	880XMAKP-*4 (5)	500	Opp	169				Furnished
ONE SPEED - TWO GEAR - POWERSHIFT (AIR)															
885XBAKX-*6 (1)	500	Opp	95				Furnished	885XBAKP-*4 (1)	500	Opp	95				Furnished
885XGAKX-*6 (3)	500	Opp	122				Furnished	885XGAKP-*4 (3)	500	Opp	122				Furnished
885XJAKX-*6 (4)	500	Opp	144				Furnished	885XJAKP-*4 (4)	500	Opp	144				Furnished
885XMAKX-*6 (5)	500	Opp	169				Furnished	885XMAKP-*4 (5)	500	Opp	169				Furnished
ONE SPEED - TWO GEAR - POWERSHIFT (HYDRAULIC)															
270XAAKX-*6	250	Opp	73			328481X	Furnished	270XAAKP-*4	300	Opp	73			328481X	Furnished
270XDAKX-*6	250	Opp	110			328481X	Furnished	270XDAKP-*4	300	Opp	110			328481X	Furnished
270XKAKX-*6	225	Opp	149			328481X	Furnished	270XKAKP-*4	300	Opp	149			328481X	Furnished
852XBAKP-*6	500	Opp	95				Furnished	852XBAKP-*4	500	Opp	95				Furnished
852XGAKP-*6	500	Opp	122				Furnished	852XGAKP-*4	500	Opp	122				Furnished
852XJAKP-*6	500	Opp	144				Furnished	852XJAKP-*4	500	Opp	144				Furnished
ONE SPEED - FORWARD & REVERSE															
863XBAKX-*4	500	Opp	95	118			Furnished								

NOTE: For SAE 6 -bolt aperture located 40° from vertical or approximately 10 o'clock when viewed from rear, see application number ALL-7 or contact your CHELSEA distributor for PTO applications prior to serial build number 32404. For applications after 32404 see application number ALL-6.

NOTE: Engine must be stopped in order to engage/disengage Mechanical shift PTOs.

NOTE: Left side opening located at approximately 7 o'clock, right side at 1 o'clock as viewed from rear of transmission.

NOTE: Do not use geared adapter assemblies on any Allison Automatic Transmission.

NOTE: Lube Tee Required - 378897 Street Tee is required for pressure lube PTOs and must be purchased separately. Only the pressure lube hose assembly 328075X (line to the idler pin) is included with the PTO. For 270/271 Series, due to varying valve installation locations on the vehicle, installer must supply the following hoses or order the following separately. One 329087X (line from tranny to valve) and two 328075X (valve dump back to PTO housing & valve to PTO clutch).

(1) Input Gear Part No. 5-P-1106
(2) Input Gear Part No. 5-P-1107
(3) Input Gear Part No. 5-P-1108
(4) Input Gear Part No. 5-P-1109
(5) Input Gear Part No. 5-P-1110
(6) Input Gear Part No. 5-P-223
(7) Input Gear Part No. 5-P-224
(8) Input Gear Part No. 5-P-284
(9) Input Gear Part No. 5-P-293
(10) Input Gear Part No. 5-P-294

Parker Hannifin Corporation
Chelsea Products Division
Olive Branch, MS 38654 USA

3000 (International - Side/Side PTO Provision)
3000 EVS (Side/Side Power Take-Off Provisions)
3000 MH
3000 ORS (Side/Side Power Take Off - Provisions)
3000 RDS
3000 SP (Side/Side PTO Option)
3000 TRV
3200 (International - Side/Side PTO Provision)
3200 ORS (Side/Side PTO Provision)
3200 SP (Side/Side PTO Provision)
3200 TRV
3500 (International - Side/Side PTO Provision)
3500 EVS (Side/Side Power Take-Off Provisions)
3500 OFS
3500 ORS (Side/Side PTO Provision)
3500 RDS
3500 SP (Side/Side PTO Provision)
B 300
B 400
MD-3060P (Close Ratio)
MD-3560P (Wide Ratio)
MD3050CR-P

LEFT SIDE ONLY

TRANSMISSION GEAR DATA:
L.S. 10-BOLT Opening Gear FORWARD of Centerline
68 Teeth - L.H. HELIX

PITCH LINE TO APERTURE FACE:
1.7800" (45.2100MM)

RIGHT SIDE ONLY

TRANSMISSION GEAR DATA:
R.S. 10-BOLT Opening Gear FORWARD of Centerline
68 Teeth - L.H. HELIX

PITCH LINE TO APERTURE FACE:
1.7800" (45.2100MM)

Caution: Application Approval Required for PTO Output Shaft Speeds Above 2500 RPM

ONE SPEED - TWO GEAR - CONSTANT MESH

LEFT Side PTO Model	Inter. Torq.	Dir. Rot.	Engine % Fwd.	Engine % Rev.	Filler Block	Adapter Assy.	Stud Kit	RIGHT Side PTO Model	Inter. Torq.	Dir. Rot.	Engine % Fwd.	Engine % Rev.	Filler Block	Adapter Assy.	Stud Kit
267SBFJP-*5 (4)	402	Eng	72				Furnished	267SBFJP-*3 (4)	402	Eng	72				Furnished
267SDFJP-*5 (3)	390	Eng	87				Furnished	267SDFJP-*3 (3)	390	Eng	87				Furnished
267SGFJP-*5 (2)	360	Eng	103				Furnished	267SGFJP-*3 (2)	360	Eng	103				Furnished
267SMFJP-*5 (5)	318	Eng	129				Furnished	267SMFJP-*3 (5)	318	Eng	129				Furnished
267SSFJP-*5 (1)	265	Eng	161				Furnished	267SSFJP-*3 (1)	265	Eng	161				Furnished
267XBFJP-*5 (8)	335	Eng	72				Furnished	267XBFJP-*3 (8)	335	Eng	72				Furnished
267XDFJP-*5 (9)	325	Eng	87				Furnished	267XDFJP-*3 (9)	325	Eng	87				Furnished
267XGFJP-*5 (10)	300	Eng	103				Furnished	267XGFJP-*3 (10)	300	Eng	103				Furnished
267XMFJP-*5 (11)	265	Eng	129				Furnished	267XMFJP-*3 (11)	265	Eng	129				Furnished
267XSFJP-*5 (1)	250	Eng	161				Furnished	267XSFJP-*3 (1)	250	Eng	161				Furnished
287GBFJP-*5 (7)	300	Eng	60				Furnished	287GBFJP-*3 (7)	300	Eng	60				Furnished
287GBFJP-*8 (7)	300	Eng	56				Furnished	287GBFJP-*8 (7)	300	Eng	56				Furnished
287GCFJP-*5 (7)	390	Eng	72				Furnished	287GCFJP-*3 (7)	390	Eng	72				Furnished
287GCFJP-*8 (7)	390	Eng	68				Furnished	287GCFJP-*8 (7)	390	Eng	68				Furnished
287GDFJP-*5 (7)	390	Eng	87				Furnished	287GDFJP-*3 (7)	390	Eng	87				Furnished
287GDFJP-*8 (7)	390	Eng	81				Furnished	287GDFJP-*8 (7)	390	Eng	81				Furnished
287GGFJP-*5 (7)	360	Eng	103				Furnished	287GGFJP-*3 (7)	360	Eng	103				Furnished
287GGFJP-*8 (7)	360	Eng	96				Furnished	287GGFJP-*8 (7)	360	Eng	96				Furnished
287GKFJP-*5 (7)	340	Eng	115				Furnished	287GKFJP-*3 (7)	340	Eng	115				Furnished
287GMFJP-*5 (7)	318	Eng	129				Furnished	287GMFJP-*3 (7)	318	Eng	129				Furnished
287GMFJP-*8 (7)	318	Eng	119				Furnished	287GMFJP-*8 (7)	318	Eng	119				Furnished
287GPFJP-*5 (7)	290	Eng	144				Furnished	287GPFJP-*3 (7)	290	Eng	144				Furnished
287GPFJP-*8 (7)	290	Eng	132				Furnished	287GPFJP-*8 (7)	290	Eng	132				Furnished
287GSFJP-*5 (7)	265	Eng	161				Furnished	287GSFJP-*3 (7)	265	Eng	161				Furnished
287GSFJP-*8 (7)	265	Eng	147				Furnished	287GSFJP-*8 (7)	265	Eng	147				Furnished
287GTFJP-*5 (7)	240	Eng	180				Furnished	287GTFJP-*3 (7)	240	Eng	180				Furnished
287GTFJP-*8 (7)	240	Eng	173				Furnished	287GTFJP-*8 (7)	240	Eng	173				Furnished
877XAFJP-*5 (6)	591	Eng	82				Furnished	877XAFJP-*3 (6)	591	Eng	82				Furnished
877XBFJP-*5 (6)	557	Eng	87				Furnished	877XBFJP-*3 (6)	557	Eng	87				Furnished
877XCFJP-*5 (6)	522	Eng	93				Furnished	877XCFJP-*3 (6)	522	Eng	93				Furnished
877XDFJP-*5 (6)	490	Eng	99				Furnished	877XDFJP-*3 (6)	490	Eng	99				Furnished
877XEFJP-*5 (6)	429	Eng	113				Furnished	877XEFJP-*3 (6)	429	Eng	113				Furnished

Continued Next Page

CAUTION: Chelsea Recommends the Power Take-Off (PTO) installation on the 3000/4000 Series Transmissions to utilize a Vehicle Interface Module, or Chassis Manufacturers' equivalent controller to incorporate all the PTO control features available, this includes the "PTO Request" and "PTO Enable Output" feature. The "PTO Enable" circuit signals the Transmission Control Module (TCM) to maintain line pressure to the PTO Failure to provide this signal may not be sufficient to the PTO This may cause damage to the PTO and /or Transmission. Please see the Allison Transmission website and individual chassis manufacturer for installation details.

NOTE: 890/897 Series - The Combined Weight of Pump, Fittings and Hoses Should Not Exceed 120 Lbs. Refer to Owner's Manual (HY25-1890-M1/US) for Complete Details.

NOTE: 280, 890 and 870 Family of PTOs stated Torque is for Intermittent and Continuous Duty Applications.

NOTE: When direct mounting a Parker P2 060 piston pump to a 267 Series PTO on the left (drivers) side opening, the PTO must be ordered as a "3" assembly arrangement for pump clearance.

NOTE: All models require a hose assembly. For the 267 Series, use 329130-1X for left side, 329130-6X for top right and 329130-4X for right side. THESE HOSE ASSEMBLIES MUST BE ORDERED SEPARATELY. For 280, 870/877 and 890/897 Series - All Mounting Hardware and Hose Assemblies are Included with the Unit.

NOTE: The 267 Series is not available in the "3" arrangement with an "XK" output due to interference with the pressure lube fitting.

NOTE: Wiring harness 379926 must be used in 2003 GM trucks for the 277, 278 and 859 Series PTOs if the GM provided in-dash PTO switch is used to control PTO operations.

NOTE: Do not use adapter gear assemblies on Allison 3000/4000 Series Automatic Transmissions.

(1) Input Gear Part No. 5-P-1173
(2) Input Gear Part No. 5-P-1225
(3) Input Gear Part No. 5-P-1293
(4) Input Gear Part No. 5-P-1350
(5) Input Gear Part No. 5-P-1351
(6) Input Gear Part No. 5-P-1428
(7) Input Gear Part No. 5-P-1491
(8) Input Gear Part No. 5-P-912
(9) Input Gear Part No. 5-P-913
(10) Input Gear Part No. 5-P-914
(11) Input Gear Part No. 5-P-915

Parker Hannifin Corporation
Chelsea Products Division
Olive Branch, MS 38654 USA

3000 (International - Side/Side PTO Provision)
3000 EVS (Side/Side Power Take-Off Provisions)
3000 MH
3000 ORS (Side/Side Power Take Off - Provisions)
3000 RDS
3000 SP (Side/Side PTO Option)
3000 TRV
3200 (International - Side/Side PTO Provision)
3200 ORS (Side/Side PTO Provision)
3200 SP (Side/Side PTO Provision)
3200 TRV
3500 (International - Side/Side PTO Provision)
3500 EVS (Side/Side Power Take-Off Provisions)
3500 OFS
3500 ORS (Side/Side PTO Provision)
3500 RDS
3500 SP (Side/Side PTO Provision)
B 300
B 400
MD-3060P (Close Ratio)
MD-3560P (Wide Ratio)
MD3050CR-P

LEFT SIDE ONLY

TRANSMISSION GEAR DATA:
L.S. 10-BOLT Opening Gear FORWARD of Centerline
68 Teeth - L.H. HELIX

PITCH LINE TO APERTURE FACE:
1.7800" (45.2100MM)

RIGHT SIDE ONLY

TRANSMISSION GEAR DATA:
R.S. 10-BOLT Opening Gear FORWARD of Centerline
68 Teeth - L.H. HELIX

PITCH LINE TO APERTURE FACE:
1.7800" (45.2100MM)

Caution: Application Approval Required for PTO Output Shaft Speeds Above 2500 RPM

LEFT Side PTO Model	Inter. Torq.	Dir. Rot.	Engine % Fwd.	Engine % Rev.	Filler Block	Adapter Assy.	Stud Kit	RIGHT Side PTO Model	Inter. Torq.	Dir. Rot.	Engine % Fwd.	Engine % Rev.	Filler Block	Adapter Assy.	Stud Kit
ONE SPEED - TWO GEAR - CONSTANT MESH															
877XFFJP-*5 (6)	379	Eng	128				Furnished	877XFFJP-*3 (6)	379	Eng	128				Furnished
877XGFJP-*5 (6)	334	Eng	145				Furnished	877XGFJP-*3 (6)	334	Eng	145				Furnished
877XHFJP-*5 (6)	315	Eng	154				Furnished	877XHFJP-*3 (6)	315	Eng	154				Furnished
877XJFJP-*5 (6)	295	Eng	164				Furnished	877XJFJP-*3 (6)	295	Eng	164				Furnished
ONE SPEED - TWO GEAR - POWERSHIFT (HYDRAULIC)															
280GBFJP-*5 (7)	300	Eng	60				Furnished	280GBFJP-*3 (7)	300	Eng	60				Furnished
280GBFJP-*8 (7)	300	Eng	56				Furnished	280GBFJP-*8 (7)	300	Eng	56				Furnished
280GCFJP-*5 (7)	390	Eng	72				Furnished	280GCFJP-*3 (7)	390	Eng	72				Furnished
280GCFJP-*8 (7)	390	Eng	68				Furnished	280GCFJP-*8 (7)	390	Eng	68				Furnished
280GDFJP-*5 (7)	390	Eng	87				Furnished	280GDFJP-*3 (7)	390	Eng	87				Furnished
280GDFJP-*8 (7)	390	Eng	81				Furnished	280GDFJP-*8 (7)	390	Eng	81				Furnished
280GGFJP-*5 (7)	360	Eng	103				Furnished	280GGFJP-*3 (7)	360	Eng	103				Furnished
280GGFJP-*8 (7)	360	Eng	96				Furnished	280GGFJP-*8 (7)	360	Eng	96				Furnished
280GKFJP-*5 (7)	340	Eng	115				Furnished	280GKFJP-*3 (7)	340	Eng	115				Furnished
280GMFJP-*5 (7)	318	Eng	129				Furnished	280GMFJP-*3 (7)	318	Eng	129				Furnished
280GMFJP-*8 (7)	318	Eng	119				Furnished	280GMFJP-*8 (7)	318	Eng	119				Furnished
280GPFJP-*5 (7)	290	Eng	144				Furnished	280GPFJP-*3 (7)	290	Eng	144				Furnished
280GPFJP-*8 (7)	290	Eng	132				Furnished	280GPFJP-*8 (7)	290	Eng	132				Furnished
280GSFJP-*5 (7)	265	Eng	161				Furnished	280GSFJP-*3 (7)	265	Eng	161				Furnished
280GSFJP-*8 (7)	265	Eng	147				Furnished	280GSFJP-*8 (7)	265	Eng	147				Furnished
280GTFJP-*5 (7)	240	Eng	180				Furnished	280GTFJP-*3 (7)	240	Eng	180				Furnished
280GTFJP-*8 (7)	240	Eng	173				Furnished	280GTFJP-*8 (7)	240	Eng	173				Furnished
870XAFJP-*5 (6)	591	Eng	82				Furnished	870XAFJP-*3 (6)	591	Eng	82				Furnished
870XBFJP-*5 (6)	557	Eng	87				Furnished	870XBFJP-*3 (6)	557	Eng	87				Furnished
870XCFJP-*5 (6)	522	Eng	93				Furnished	870XCFJP-*3 (6)	522	Eng	93				Furnished
870XDFJP-*5 (6)	490	Eng	99				Furnished	870XDFJP-*3 (6)	490	Eng	99				Furnished
870XEFJP-*5 (6)	429	Eng	113				Furnished	870XEFJP-*3 (6)	429	Eng	113				Furnished
870XFFJP-*5 (6)	379	Eng	128				Furnished	870XFFJP-*3 (6)	379	Eng	128				Furnished
870XGFJP-*5 (6)	334	Eng	145				Furnished	870XGFJP-*3 (6)	334	Eng	145				Furnished
870XHFJP-*5 (6)	315	Eng	154				Furnished	870XHFJP-*3 (6)	315	Eng	154				Furnished
870XJFJP-*5 (6)	295	Eng	164				Furnished	870XJFJP-*3 (6)	295	Eng	164				Furnished

Continued Next Page

CAUTION: Chelsea Recommends the Power Take-Off (PTO) installation on the 3000/4000 Series Transmissions to utilize a Vehicle Interface Module, or Chassis Manufacturers' equivalent controller to incorporate all the PTO control features available, this includes the "PTO Request" and "PTO Enable Output" feature. The "PTO Enable" circuit signals the Transmission Control Module (TCM) to maintain line pressure to the PTO Failure to provide this signal may not be sufficient to the PTO This may cause damage to the PTO and /or Transmission. Please see the Allison Transmission website and individual chassis manufacturer for installation details.

NOTE: 890/897 Series - The Combined Weight of Pump, Fittings and Hoses Should Not Exceed 120 Lbs. Refer to Owner's Manual (HY25-1890-M1/US) for Complete Details.

NOTE: 280, 890 and 870 Family of PTOs stated Torque is for Intermittent and Continuous Duty Applications.

NOTE: When direct mounting a Parker P2 060 piston pump to a 267 Series PTO on the left (drivers) side opening, the PTO must be ordered as a "3" assembly arrangement for pump clearance.

NOTE: All models require a hose assembly. For the 267 Series, use 329130-1X for left side, 329130-6X for top right and 329130-4X for right side. THESE HOSE ASSEMBLIES MUST BE ORDERED SEPARATELY. For 280, 870/877 and 890/897 Series - All Mounting Hardware and Hose Assemblies are Included with the Unit.

NOTE: The 267 Series is not available in the "3" arrangement with an "XK" output due to interference with the pressure lube fitting.

NOTE: Wiring harness 379926 must be used in 2003 GM trucks for the 277, 278 and 859 Series PTOs if the GM provided in-dash PTO switch is used to control PTO operations.

NOTE: Do not use adapter gear assemblies on Allison 3000/4000 Series Automatic Transmissions.

(6) Input Gear Part No. 5-P-1428
(7) Input Gear Part No. 5-P-1491

Allison

Parker Hannifin Corporation
Chelsea Products Division
Olive Branch, MS 38654 USA

3000 (International - Side/Side PTO Provision)
3000 EVS (Side/Side Power Take-Off Provisions)
3000 MH
3000 ORS (Side/Side Power Take Off - Provisions)
3000 RDS
3000 SP (Side/Side PTO Option)
3000 TRV
3200 (International - Side/Side PTO Provision)
3200 ORS (Side/Side PTO Provision)
3200 SP (Side/Side PTO Provision)
3200 TRV
3500 (International - Side/Side PTO Provision)
3500 EVS (Side/Side Power Take-Off Provisions)
3500 OFS
3500 ORS (Side/Side PTO Provision)
3500 RDS
3500 SP (Side/Side PTO Provision)
B 300
B 400
MD-3060P (Close Ratio)
MD-3560P (Wide Ratio)
MD3050CR-P

LEFT SIDE ONLY

TRANSMISSION GEAR DATA:
L.S. 10-BOLT Opening Gear FORWARD of Centerline
68 Teeth - L.H. HELIX

PITCH LINE TO APERTURE FACE:
1.7800" (45.2100MM)

RIGHT SIDE ONLY

TRANSMISSION GEAR DATA:
R.S. 10-BOLT Opening Gear FORWARD of Centerline
68 Teeth - L.H. HELIX

PITCH LINE TO APERTURE FACE:
1.7800" (45.2100MM)

Caution: Application Approval Required for PTO Output Shaft Speeds Above 2500 RPM

LEFT Side PTO Model	Inter. Torq.	Dir. Rot.	Engine % Fwd.	Engine % Rev.	Filler Block	Adapter Assy.	Stud Kit	RIGHT Side PTO Model	Inter. Torq.	Dir. Rot.	Engine % Fwd.	Engine % Rev.	Filler Block	Adapter Assy.	Stud Kit
ONE SPEED - POWERSHIFT (HYDRAULIC) EXTENDED SHAFT															
890LAFJW-*5 (6)	591	Eng	82				Furnished	890RAFJW-*5 (6)	591	Eng	82				Furnished
890LBFJW-*5 (6)	557	Eng	87				Furnished	890RBFJW-*5 (6)	557	Eng	87				Furnished
890LCFJW-*5 (6)	522	Eng	93				Furnished	890RCFJW-*5 (6)	522	Eng	93				Furnished
890LDFJW-*5 (6)	490	Eng	99				Furnished	890RDFJW-*5 (6)	490	Eng	99				Furnished
890LEFJW-*5 (6)	429	Eng	113				Furnished	890REFJW-*5 (6)	429	Eng	113				Furnished
890LFFJW-*5 (6)	379	Eng	128				Furnished	890RFFJW-*5 (6)	379	Eng	128				Furnished
890LGFJW-*5 (6)	334	Eng	145				Furnished	890RGFJW-*5 (6)	334	Eng	145				Furnished
890LHFJW-*5 (6)	315	Eng	154				Furnished	890RHFJW-*5 (6)	315	Eng	154				Furnished
ONE SPEED - CONSTANT MESH EXTENDED SHAFT															
897LAFJW-*5 (6)	591	Eng	82				Furnished	897RAFJW-*5 (6)	591	Eng	82				Furnished
897LBFJW-*5 (6)	557	Eng	87				Furnished	897RBFJW-*5 (6)	557	Eng	87				Furnished
897LCFJW-*5 (6)	522	Eng	93				Furnished	897RCFJW-*5 (6)	522	Eng	93				Furnished
897LDFJW-*5 (6)	490	Eng	99				Furnished	897RDFJW-*5 (6)	490	Eng	99				Furnished
897LEFJW-*5 (6)	429	Eng	113				Furnished	897REFJW-*5 (6)	429	Eng	113				Furnished
897LFFJW-*5 (6)	379	Eng	128				Furnished	897RFFJW-*5 (6)	379	Eng	128				Furnished
897LGFJW-*5 (6)	334	Eng	145				Furnished	897RGFJW-*5 (6)	334	Eng	145				Furnished
897LHFJW-*5 (6)	315	Eng	154				Furnished	897RHFJW-*5 (6)	315	Eng	154				Furnished

CAUTION: Chelsea Recommends the Power Take-Off (PTO) installation on the 3000/4000 Series Transmissions to utilize a Vehicle Interface Module, or Chassis Manufacturers' equivalent controller to incorporate all the PTO control features available, this includes the "PTO Request" and "PTO Enable Output" feature. The "PTO Enable" circuit signals the Transmission Control Module (TCM) to maintain line pressure to the PTO Failure to provide this signal may not be sufficient to the PTO This may cause damage to the PTO and /or Transmission. Please see the Allison Transmission website and individual chassis manufacturer for installation details.

NOTE: 890/897 Series - The Combined Weight of Pump, Fittings and Hoses Should Not Exceed 120 Lbs. Refer to Owner's Manual (HY25-1890-M1/US) for Complete Details.

NOTE: 280, 890 and 870 Family of PTOs stated Torque is for Intermittent and Continuous Duty Applications.

NOTE: When direct mounting a Parker P2 060 piston pump to a 267 Series PTO on the left (drivers) side opening, the PTO must be ordered as a "3" assembly arrangement for pump clearance.

NOTE: All models require a hose assembly. For the 267 Series, use 329130-1X for left side, 329130-6X for top right and 329130-4X for right side. THESE HOSE ASSEMBLIES MUST BE ORDERED SEPARATELY. For 280, 870/877 and 890/897 Series - All Mounting Hardware and Hose Assemblies are Included with the Unit.

NOTE: The 267 Series is not available in the "3" arrangement with an "XK" output due to interference with the pressure lube fitting.

NOTE: Wiring harness 379926 must be used in 2003 GM trucks for the 277, 278 and 859 Series PTOs if the GM provided in-dash PTO switch is used to control PTO operations.

NOTE: Do not use adapter gear assemblies on Allison 3000/4000 Series Automatic Transmissions.

(6) Input Gear Part No. 5-P-1428

Parker Hannifin Corporation
Chelsea Products Division
Olive Branch, MS 38654 USA

3000 (3000 Family-Side / Side PTO Provision w/ Integral Cooler)

LEFT SIDE ONLY

TRANSMISSION GEAR DATA:
L.S. 10-BOLT Opening Gear FORWARD of Centerline
68 Teeth - L.H. HELIX

PITCH LINE TO APERTURE FACE:
1.7800" (45.2100MM)

RIGHT SIDE ONLY

TRANSMISSION GEAR DATA:
R.S. 10-BOLT Opening Gear FORWARD of Centerline
68 Teeth - L.H. HELIX

PITCH LINE TO APERTURE FACE:
1.7800" (45.2100MM)

Caution: Application Approval Required for PTO Output Shaft Speeds Above 2500 RPM

ONE SPEED - TWO GEAR - CONSTANT MESH

LEFT Side PTO Model	Inter. Torq.	Dir. Rot.	Engine % Fwd.	Engine % Rev.	Filler Block	Adapter Assy.	Stud Kit	RIGHT Side PTO Model	Inter. Torq.	Dir. Rot.	Engine % Fwd.	Engine % Rev.	Filler Block	Adapter Assy.	Stud Kit
267SBFJP-*5 (4)	402	Eng	72				Furnished	267SBFJP-*3 (4)	402	Eng	72				Furnished
267SDFJP-*5 (3)	390	Eng	87				Furnished	267SDFJP-*3 (3)	390	Eng	87				Furnished
267SGFJP-*5 (2)	360	Eng	103				Furnished	267SGFJP-*3 (2)	360	Eng	103				Furnished
267SMFJP-*5 (5)	318	Eng	129				Furnished	267SMFJP-*3 (5)	318	Eng	129				Furnished
267SSFJP-*5 (1)	265	Eng	161				Furnished	267SSFJP-*3 (1)	265	Eng	161				Furnished
267XBFJP-*5 (16)	335	Eng	72				Furnished	267XBFJP-*3 (16)	335	Eng	72				Furnished
267XDFJP-*5 (17)	325	Eng	87				Furnished	267XDFJP-*3 (17)	325	Eng	87				Furnished
267XGFJP-*5 (18)	300	Eng	103				Furnished	267XGFJP-*3 (18)	300	Eng	103				Furnished
267XMFJP-*5 (19)	265	Eng	129				Furnished	267XMFJP-*3 (19)	265	Eng	129				Furnished
267XSFJP-*5 (1)	250	Eng	161				Furnished	267XSFJP-*3 (1)	250	Eng	161				Furnished
287GBFJP-*5 (15)	300	Eng	60				Furnished	287GBFJP-*3 (15)	300	Eng	60				Furnished
287GBFJP-*8 (15)	300	Eng	56				Furnished	287GBFJP-*8 (15)	300	Eng	56				Furnished
287GCFJP-*5 (15)	390	Eng	72				Furnished	287GCFJP-*3 (15)	390	Eng	72				Furnished
287GCFJP-*8 (15)	390	Eng	68				Furnished	287GCFJP-*8 (15)	390	Eng	68				Furnished
287GDFJP-*5 (15)	390	Eng	87				Furnished	287GDFJP-*3 (15)	390	Eng	87				Furnished
287GDFJP-*8 (15)	390	Eng	81				Furnished	287GDFJP-*8 (15)	390	Eng	81				Furnished
287GGFJP-*5 (15)	360	Eng	103				Furnished	287GGFJP-*3 (15)	360	Eng	103				Furnished
287GGFJP-*8 (15)	360	Eng	96				Furnished	287GGFJP-*8 (15)	360	Eng	96				Furnished
287GKFJP-*5 (15)	340	Eng	115				Furnished	287GKFJP-*3 (15)	340	Eng	115				Furnished
287GMFJP-*5 (15)	318	Eng	129				Furnished	287GMFJP-*3 (15)	318	Eng	129				Furnished
287GMFJP-*8 (15)	318	Eng	119				Furnished	287GMFJP-*8 (15)	318	Eng	119				Furnished
287GPFJP-*5 (15)	290	Eng	144				Furnished	287GPFJP-*3 (15)	290	Eng	144				Furnished
287GPFJP-*8 (15)	290	Eng	132				Furnished	287GPFJP-*8 (15)	290	Eng	132				Furnished
287GSFJP-*5 (15)	265	Eng	161				Furnished	287GSFJP-*3 (15)	265	Eng	161				Furnished
287GSFJP-*8 (15)	265	Eng	147				Furnished	287GSFJP-*8 (15)	265	Eng	147				Furnished
287GTFJP-*5 (15)	240	Eng	180				Furnished	287GTFJP-*3 (15)	240	Eng	180				Furnished
287GTFJP-*8 (15)	240	Eng	173				Furnished	287GTFJP-*8 (15)	240	Eng	173				Furnished
877XAFJP-*5 (6)	591	Eng	82				Furnished	877XAFJP-*3 (6)	591	Eng	82				Furnished
877XBFJP-*5 (6)	557	Eng	87				Furnished	877XBFJP-*3 (6)	557	Eng	87				Furnished
877XCFJP-*5 (6)	522	Eng	93				Furnished	877XCFJP-*3 (6)	522	Eng	93				Furnished
877XDFJP-*5 (6)	490	Eng	99				Furnished	877XDFJP-*3 (6)	490	Eng	99				Furnished
877XEFJP-*5 (6)	429	Eng	113				Furnished	877XEFJP-*3 (6)	429	Eng	113				Furnished

Continued Next Page

CAUTION: Chelsea Recommends the Power Take-Off (PTO) installation on the 3000/4000 Series Transmissions to utilize a Vehicle Interface Module, or Chassis Manufacturers' equivalent controller to incorporate all the PTO control features available, this includes the "PTO Request" and "PTO Enable Output" feature. The "PTO Enable" circuit signals the Transmission Control Module (TCM) to maintain line pressure to the PTO Failure to provide this signal may not be sufficient to the PTO This may cause damage to the PTO and /or Transmission. Please see the Allison Transmission website and individual chassis manufacturer for installation details.

NOTE: When direct mounting a Parker P2 060 piston pump to a 267 Series PTO on the left (drivers) side opening, the PTO must be ordered as a "3" assembly arrangement for pump clearance.

NOTE: All models require a hose assembly. For the 267 Series, use 329130-1X for left side, 329130-6X for top right and 329130-4X for right side. For the 269, 277, 278 and 867 Series, use 329130-5X for left side, 329075-2X for top right and 329075-1X for right side. If ordering shift options "R", "G" or "H" for 277, 278 or 859 Series use 329130-5X for left side, 329075-1X for right side THESE HOSE ASSEMBLIES MUST BE ORDERED SEPARATELY. For 859, 870/877 and 890/897 Series - All Mounting Hardware and Hose Assemblies are Included with the Unit.

NOTE: The 267 Series is not available in the "3" arrangement with an "XK" output due to interference with the pressure lube fitting.

NOTE: 890/897 Series - The Combined Weight of Pump, Fittings and Hoses Should Not Exceed 120 Lbs. Refer to Owner's Manual (HY25-1890-M1/US) for Complete Details

NOTE: 280, 890 and 870 Family of PTOs stated Torque is for Intermittent and Continuous Duty Applications.

(1) Input Gear Part No. 5-P-1173
(2) Input Gear Part No. 5-P-1225
(3) Input Gear Part No. 5-P-1293
(4) Input Gear Part No. 5-P-1350
(5) Input Gear Part No. 5-P-1351
(6) Input Gear Part No. 5-P-1428
(15) Input Gear Part No. 5-P-1491
(16) Input Gear Part No. 5-P-912
(17) Input Gear Part No. 5-P-913
(18) Input Gear Part No. 5-P-914
(19) Input Gear Part No. 5-P-915

Parker Hannifin Corporation
Chelsea Products Division
Olive Branch, MS 38654 USA

Allison

3000 (3000 Family-Side / Side PTO Provision w/ Integral Cooler)

LEFT SIDE ONLY

TRANSMISSION GEAR DATA:
L.S. 10-BOLT Opening Gear FORWARD of Centerline
68 Teeth - L.H. HELIX

PITCH LINE TO APERTURE FACE:
1.7800" (45.2100MM)

RIGHT SIDE ONLY

TRANSMISSION GEAR DATA:
R.S. 10-BOLT Opening Gear FORWARD of Centerline
68 Teeth - L.H. HELIX

PITCH LINE TO APERTURE FACE:
1.7800" (45.2100MM)

Caution: Application Approval Required for PTO Output Shaft Speeds Above 2500 RPM

LEFT Side PTO Model	Inter. Torq.	Dir. Rot.	Engine % Fwd.	Engine % Rev.	Filler Block	Adapter Assy.	Stud Kit	RIGHT Side PTO Model	Inter. Torq.	Dir. Rot.	Engine % Fwd.	Engine % Rev.	Filler Block	Adapter Assy.	Stud Kit
ONE SPEED - TWO GEAR - CONSTANT MESH															
877XFFJP-*5 (6)	379	Eng	128				Furnished	877XFFJP-*3 (6)	379	Eng	128				Furnished
877XGFJP-*5 (6)	334	Eng	145				Furnished	877XGFJP-*3 (6)	334	Eng	145				Furnished
877XHFJP-*5 (6)	315	Eng	154				Furnished	877XHFJP-*3 (6)	315	Eng	154				Furnished
877XJFJP-*5 (6)	295	Eng	164				Furnished	877XJFJP-*3 (6)	295	Eng	164				Furnished
ONE SPEED - TWO GEAR - POWERSHIFT (HYDRAULIC)															
870XAFJP-*5 (6)	591	Eng	82				Furnished	870XAFJP-*3 (6)	591	Eng	82				Furnished
870XBFJP-*5 (6)	557	Eng	87				Furnished	870XBFJP-*3 (6)	557	Eng	87				Furnished
870XCFJP-*5 (6)	522	Eng	93				Furnished	870XCFJP-*3 (6)	522	Eng	93				Furnished
870XDFJP-*5 (6)	490	Eng	99				Furnished	870XDFJP-*3 (6)	490	Eng	99				Furnished
870XEFJP-*5 (6)	429	Eng	113				Furnished	870XEFJP-*3 (6)	429	Eng	113				Furnished
870XFFJP-*5 (6)	379	Eng	128				Furnished	870XFFJP-*3 (6)	379	Eng	128				Furnished
870XGFJP-*5 (6)	334	Eng	145				Furnished	870XGFJP-*3 (6)	334	Eng	145				Furnished
870XHFJP-*5 (6)	315	Eng	154				Furnished	870XHFJP-*3 (6)	315	Eng	154				Furnished
870XJFJP-*5 (6)	295	Eng	164				Furnished	870XJFJP-*3 (6)	295	Eng	164				Furnished
ONE SPEED - POWERSHIFT (HYDRAULIC) EXTENDED SHAFT															
890NAFJW-*3 (6)	591	Eng	82				Furnished	890RAFJW-*5 (6)	591	Eng	82				Furnished
890NBFJW-*3 (6)	557	Eng	87				Furnished	890RBFJW-*5 (6)	557	Eng	87				Furnished
890NCFJW-*3 (6)	522	Eng	93				Furnished	890RCFJW-*5 (6)	522	Eng	93				Furnished
890NDFJW-*3 (6)	490	Eng	99				Furnished	890RDFJW-*5 (6)	490	Eng	99				Furnished
890NEFJW-*3 (6)	429	Eng	113				Furnished	890REFJW-*5 (6)	429	Eng	113				Furnished
890NFFJW-*3 (6)	379	Eng	128				Furnished	890RFFJW-*5 (6)	379	Eng	128				Furnished
890NGFJW-*3 (6)	334	Eng	145				Furnished	890RGFJW-*5 (6)	334	Eng	145				Furnished
890NHFJW-*3 (6)	315	Eng	154				Furnished	890RHFJW-*5 (6)	315	Eng	154				Furnished
ONE SPEED - CONSTANT MESH EXTENDED SHAFT															
897NAFJW-*3 (7)	591	Eng	82				Furnished	897RAFJW-*5 (7)	591	Eng	82				Furnished
897NBFJW-*3 (8)	557	Eng	87				Furnished	897RBFJW-*5 (8)	557	Eng	87				Furnished
897NCFJW-*3 (9)	522	Eng	93				Furnished	897RCFJW-*5 (9)	522	Eng	93				Furnished
897NDFJW-*3 (10)	490	Eng	99				Furnished	897RDFJW-*5 (10)	490	Eng	99				Furnished
897NEFJW-*3 (11)	429	Eng	113				Furnished	897REFJW-*5 (11)	429	Eng	113				Furnished

Continued Next Page

CAUTION: Chelsea Recommends the Power Take-Off (PTO) installation on the 3000/4000 Series Transmissions to utilize a Vehicle Interface Module, or Chassis Manufacturers' equivalent controller to incorporate all the PTO control features available, this includes the "PTO Request" and "PTO Enable Output" feature. The "PTO Enable" circuit signals the Transmission Control Module (TCM) to maintain line pressure to the PTO Failure to provide this signal may not be sufficient to the PTO This may cause damage to the PTO and /or Transmission. Please see the Allison Transmission website and individual chassis manufacturer for installation details.

NOTE: When direct mounting a Parker P2 060 piston pump to a 267 Series PTO on the left (drivers) side opening, the PTO must be ordered as a "3" assembly arrangement for pump clearance.

NOTE: All models require a hose assembly. For the 267 Series, use 329130-1X for left side, 329130-6X for top right and 329130-4X for right side. For the 269, 277, 278 and 867 Series, use 329130-5X for left side, 329075-2X for top right and 329075-1X for right side. If ordering shift options "R", "G" or "H" for 277, 278 or 859 Series use 329130-5X for left side, 329075-1X for right side THESE HOSE ASSEMBLIES MUST BE ORDERED SEPARATELY. For 859, 870/877 and 890/897 Series - All Mounting Hardware and Hose Assemblies are Included with the Unit.

NOTE: The 267 Series is not available in the "3" arrangement with an "XK" output due to interference with the pressure lube fitting.

NOTE: 890/897 Series - The Combined Weight of Pump, Fittings and Hoses Should Not Exceed 120 Lbs. Refer to Owner's Manual (HY25-1890-M1/US) for Complete Details

NOTE: 280, 890 and 870 Family of PTOs stated Torque is for Intermittent and Continuous Duty Applications.

(6) Input Gear Part No. 5-P-1428
(7) Input Gear Part No. 5-P-1428-1X
(8) Input Gear Part No. 5-P-1428-2X
(9) Input Gear Part No. 5-P-1428-3X
(10) Input Gear Part No. 5-P-1428-4X
(11) Input Gear Part No. 5-P-1428-5X

Parker Hannifin Corporation
Chelsea Products Division
Olive Branch, MS 38654 USA

3000 (3000 Family-Side / Side PTO Provision w/ Integral Cooler)

LEFT SIDE ONLY

TRANSMISSION GEAR DATA:
L.S. 10-BOLT Opening Gear FORWARD of Centerline
68 Teeth - L.H. HELIX

PITCH LINE TO APERTURE FACE:
1.7800" (45.2100MM)

RIGHT SIDE ONLY

TRANSMISSION GEAR DATA:
R.S. 10-BOLT Opening Gear FORWARD of Centerline
68 Teeth - L.H. HELIX

PITCH LINE TO APERTURE FACE:
1.7800" (45.2100MM)

Caution: Application Approval Required for PTO Output Shaft Speeds Above 2500 RPM

LEFT Side PTO Model	Inter. Torq.	Dir. Rot.	Engine % Fwd.	Engine % Rev.	Filler Block	Adapter Assy.	Stud Kit	RIGHT Side PTO Model	Inter. Torq.	Dir. Rot.	Engine % Fwd.	Engine % Rev.	Filler Block	Adapter Assy.	Stud Kit
ONE SPEED - CONSTANT MESH EXTENDED SHAFT															
897NFFJW-*3 (12)	379	Eng	128				Furnished	897RFFJW-*5 (12)	379	Eng	128				Furnished
897NGFJW-*3 (13)	334	Eng	145				Furnished	897RGFJW-*5 (13)	334	Eng	145				Furnished
897NHFJW-*3 (14)	315	Eng	154				Furnished	897RHFJW-*5 (14)	315	Eng	154				Furnished

CAUTION: Chelsea Recommends the Power Take-Off (PTO) installation on the 3000/4000 Series Transmissions to utilize a Vehicle Interface Module, or Chassis Manufacturers' equivalent controller to incorporate all the PTO control features available, this includes the "PTO Request" and "PTO Enable Output" feature. The "PTO Enable" circuit signals the Transmission Control Module (TCM) to maintain line pressure to the PTO Failure to provide this signal may not be sufficient to the PTO This may cause damage to the PTO and /or Transmission. Please see the Allison Transmission website and individual chassis manufacturer for installation details.

NOTE: When direct mounting a Parker P2 060 piston pump to a 267 Series PTO on the left (drivers) side opening, the PTO must be ordered as a "3" assembly arrangement for pump clearance.

NOTE: All models require a hose assembly. For the 267 Series, use 329130-1X for left side, 329130-6X for top right and 329130-4X for right side. For the 269, 277, 278 and 867 Series, use 329130-5X for left side, 329075-2X for top right and 329075-1X for right side. If ordering shift options "R", "G" or "H" for 277, 278 or 859 Series use 329130-5X for left side, 329075-1X for right side THESE HOSE ASSEMBLIES MUST BE ORDERED SEPARATELY. For 859, 870/877 and 890/897 Series - All Mounting Hardware and Hose Assemblies are Included with the Unit.

NOTE: The 267 Series is not available in the "3" arrangement with an "XK" output due to interference with the pressure lube fitting.

NOTE: 890/897 Series - The Combined Weight of Pump, Fittings and Hoses Should Not Exceed 120 Lbs. Refer to Owner's Manual (HY25-1890-M1/US) for Complete Details

NOTE: 280, 890 and 870 Family of PTOs stated Torque is for Intermittent and Continuous Duty Applications.

(12) Input Gear Part No. 5-P-1428-6X
(13) Input Gear Part No. 5-P-1428-7X
(14) Input Gear Part No. 5-P-1428-8X

Allison

Parker Hannifin Corporation
Chelsea Products Division
Olive Branch, MS 38654 USA

3000 (3000 Family- Side/Side PTO Provision w/ Retarder)

LEFT SIDE ONLY

TRANSMISSION GEAR DATA:
L.S. 10-BOLT Opening Gear FORWARD of Centerline
68 Teeth - L.H. HELIX

PITCH LINE TO APERTURE FACE:
1.7800" (45.2100MM)

RIGHT SIDE ONLY

TRANSMISSION GEAR DATA:
R.S. 10-BOLT Opening Gear FORWARD of Centerline
68 Teeth - L.H. HELIX

PITCH LINE TO APERTURE FACE:
1.7800" (45.2100MM)

Caution: Application Approval Required for PTO Output Shaft Speeds Above 2500 RPM

LEFT Side PTO Model	Inter. Torq.	Dir. Rot.	Engine % Fwd.	Engine % Rev.	Filler Block	Adapter Assy.	Stud Kit	RIGHT Side PTO Model	Inter. Torq.	Dir. Rot.	Engine % Fwd.	Engine % Rev.	Filler Block	Adapter Assy.	Stud Kit
ONE SPEED - TWO GEAR - CONSTANT MESH															
267SBFJP-*5 (4)	402	Eng	72				Furnished	267SBFJP-*3 (4)	402	Eng	72				Furnished
267SDFJP-*5 (3)	390	Eng	87				Furnished	267SDFJP-*3 (3)	390	Eng	87				Furnished
267SGFJP-*5 (2)	360	Eng	103				Furnished	267SGFJP-*3 (2)	360	Eng	103				Furnished
267SMFJP-*5 (5)	318	Eng	129				Furnished	267SMFJP-*3 (5)	318	Eng	129				Furnished
267SSFJP-*5 (1)	265	Eng	161				Furnished	267SSFJP-*3 (1)	265	Eng	161				Furnished
267XBFJP-*5 (8)	335	Eng	72				Furnished	267XBFJP-*3 (8)	335	Eng	72				Furnished
267XDFJP-*5 (9)	325	Eng	87				Furnished	267XDFJP-*3 (9)	325	Eng	87				Furnished
267XGFJP-*5 (10)	300	Eng	103				Furnished	267XGFJP-*3 (10)	300	Eng	103				Furnished
267XMFJP-*5 (11)	265	Eng	129				Furnished	267XMFJP-*3 (11)	265	Eng	129				Furnished
267XSFJP-*5 (1)	250	Eng	161				Furnished	267XSFJP-*3 (1)	250	Eng	161				Furnished
287GBFJP-*5 (7)	300	Eng	60				Furnished	287GBFJP-*3 (7)	300	Eng	60				Furnished
287GBFJP-*8 (7)	300	Eng	56				Furnished	287GBFJP-*8 (7)	300	Eng	56				Furnished
287GCFJP-*5 (7)	390	Eng	72				Furnished	287GCFJP-*3 (7)	390	Eng	72				Furnished
287GCFJP-*8 (7)	390	Eng	68				Furnished	287GCFJP-*8 (7)	390	Eng	68				Furnished
287GDFJP-*5 (7)	390	Eng	87				Furnished	287GDFJP-*3 (7)	390	Eng	87				Furnished
287GDFJP-*8 (7)	390	Eng	81				Furnished	287GDFJP-*8 (7)	390	Eng	81				Furnished
287GGFJP-*5 (7)	360	Eng	103				Furnished	287GGFJP-*3 (7)	360	Eng	103				Furnished
287GGFJP-*8 (7)	360	Eng	96				Furnished	287GGFJP-*8 (7)	360	Eng	96				Furnished
287GKFJP-*5 (7)	340	Eng	115				Furnished	287GKFJP-*3 (7)	340	Eng	115				Furnished
287GMFJP-*5 (7)	318	Eng	129				Furnished	287GMFJP-*3 (7)	318	Eng	129				Furnished
287GMFJP-*8 (7)	318	Eng	119				Furnished	287GMFJP-*8 (7)	318	Eng	119				Furnished
287GPFJP-*5 (7)	290	Eng	144				Furnished	287GPFJP-*3 (7)	290	Eng	144				Furnished
287GPFJP-*8 (7)	290	Eng	132				Furnished	287GPFJP-*8 (7)	290	Eng	132				Furnished
287GSFJP-*5 (7)	265	Eng	161				Furnished	287GSFJP-*3 (7)	265	Eng	161				Furnished
287GSFJP-*8 (7)	265	Eng	147				Furnished	287GSFJP-*8 (7)	265	Eng	147				Furnished
287GTFJP-*5 (7)	240	Eng	180				Furnished	287GTFJP-*3 (7)	240	Eng	180				Furnished
287GTFJP-*8 (7)	240	Eng	173				Furnished	287GTFJP-*8 (7)	240	Eng	173				Furnished
877XAFJP-*5 (6)	591	Eng	82				Furnished	877XAFJP-*3 (6)	591	Eng	82				Furnished
877XBFJP-*5 (6)	557	Eng	87				Furnished	877XBFJP-*3 (6)	557	Eng	87				Furnished
877XCFJP-*5 (6)	522	Eng	93				Furnished	877XCFJP-*3 (6)	522	Eng	93				Furnished
877XDFJP-*5 (6)	490	Eng	99				Furnished	877XDFJP-*3 (6)	490	Eng	99				Furnished
877XEFJP-*5 (6)	429	Eng	113				Furnished	877XEFJP-*3 (6)	429	Eng	113				Furnished

Continued Next Page

CAUTION: Chelsea Recommends the Power Take-Off (PTO) installation on the 3000/4000 Series Transmissions to utilize a Vehicle Interface Module, or Chassis Manufacturers' equivalent controller to incorporate all the PTO control features available, this includes the "PTO Request" and "PTO Enable Output" feature. The "PTO Enable" circuit signals the Transmission Control Module (TCM) to maintain line pressure to the PTO Failure to provide this signal may not be sufficient to the PTO This may cause damage to the PTO and /or Transmission. Please see the Allison Transmission website and individual chassis manufacturer for installation details.

NOTE: When direct mounting a Parker P2 060 piston pump to a 267 Series PTO on the left (drivers) side opening, the PTO must be ordered as a "3" assembly arrangement for pump clearance.

NOTE: All models require a hose assembly. For the 267 Series, use 329130-1X for left side, 329130-6X for top right and 329130-4X for right side. THESE HOSE ASSEMBLIES MUST BE ORDERED SEPARATELY. For 280, 870/877 and 890/897 Series - All Mounting Hardware and Hose Assemblies are Included with the Unit.

NOTE: The 267 Series is not available in the "3" arrangement with an "XK" output due to interference with the pressure lube fitting.

NOTE: Do not use adapter gear assemblies on Allison 3000/4000 Series Automatic Transmissions.

NOTE: 280, 890 and 870 Family of PTOs stated Torque is for Intermittent and Continuous Duty Applications.

NOTE: 890/897 Series - The Combined Weight of Pump, Fittings and Hoses Should Not Exceed 120 Lbs. Refer to Owner's Manual (HY25-1890-M1/US) for Complete Details

(1) Input Gear Part No. 5-P-1173
(2) Input Gear Part No. 5-P-1225
(3) Input Gear Part No. 5-P-1293
(4) Input Gear Part No. 5-P-1350
(5) Input Gear Part No. 5-P-1351
(6) Input Gear Part No. 5-P-1428
(7) Input Gear Part No. 5-P-1491
(8) Input Gear Part No. 5-P-912
(9) Input Gear Part No. 5-P-913
(10) Input Gear Part No. 5-P-914
(11) Input Gear Part No. 5-P-915

Parker Hannifin Corporation
Chelsea Products Division
Olive Branch, MS 38654 USA

3000 (3000 Family- Side/Side PTO Provision w/ Retarder)

LEFT SIDE ONLY

TRANSMISSION GEAR DATA:
L.S. 10-BOLT Opening Gear FORWARD of Centerline
68 Teeth - L.H. HELIX

PITCH LINE TO APERTURE FACE:
1.7800" (45.2100MM)

RIGHT SIDE ONLY

TRANSMISSION GEAR DATA:
R.S. 10-BOLT Opening Gear FORWARD of Centerline
68 Teeth - L.H. HELIX

PITCH LINE TO APERTURE FACE:
1.7800" (45.2100MM)

Caution: Application Approval Required for PTO Output Shaft Speeds Above 2500 RPM

LEFT Side PTO Model	Inter. Torq.	Dir. Rot.	Engine %		Filler Block	Adapter Assy.	Stud Kit	RIGHT Side PTO Model	Inter. Torq.	Dir. Rot.	Engine %		Filler Block	Adapter Assy.	Stud Kit
			Fwd.	Rev.							Fwd.	Rev.			
ONE SPEED - TWO GEAR - CONSTANT MESH															
877XFFJP-*5 (6)	379	Eng	128				Furnished	877XFFJP-*3 (6)	379	Eng	128				Furnished
877XGFJP-*5 (6)	334	Eng	145				Furnished	877XGFJP-*3 (6)	334	Eng	145				Furnished
877XHFJP-*5 (6)	315	Eng	154				Furnished	877XHFJP-*3 (6)	315	Eng	154				Furnished
877XJFJP-*5 (6)	295	Eng	164				Furnished	877XJFJP-*3 (6)	295	Eng	164				Furnished
ONE SPEED - TWO GEAR - POWERSHIFT (HYDRAULIC)															
280GBFJP-*5 (7)	300	Eng	60				Furnished	280GBFJP-*3 (7)	300	Eng	60				Furnished
280GBFJP-*8 (7)	300	Eng	56				Furnished	280GBFJP-*8 (7)	300	Eng	56				Furnished
280GCFJP-*5 (7)	390	Eng	72				Furnished	280GCFJP-*3 (7)	390	Eng	72				Furnished
280GCFJP-*8 (7)	390	Eng	68				Furnished	280GCFJP-*8 (7)	390	Eng	68				Furnished
280GDFJP-*5 (7)	390	Eng	87				Furnished	280GDFJP-*3 (7)	390	Eng	87				Furnished
280GDFJP-*8 (7)	390	Eng	81				Furnished	280GDFJP-*8 (7)	390	Eng	81				Furnished
280GGFJP-*5 (7)	360	Eng	103				Furnished	280GGFJP-*3 (7)	360	Eng	103				Furnished
280GGFJP-*8 (7)	360	Eng	96				Furnished	280GGFJP-*8 (7)	360	Eng	96				Furnished
280GKFJP-*5 (7)	340	Eng	115				Furnished	280GKFJP-*3 (7)	340	Eng	115				Furnished
280GMFJP-*5 (7)	318	Eng	129				Furnished	280GMFJP-*3 (7)	318	Eng	129				Furnished
280GMFJP-*8 (7)	318	Eng	119				Furnished	280GMFJP-*8 (7)	318	Eng	119				Furnished
280GPFJP-*5 (7)	290	Eng	144				Furnished	280GPFJP-*3 (7)	290	Eng	144				Furnished
280GPFJP-*8 (7)	290	Eng	132				Furnished	280GPFJP-*8 (7)	290	Eng	132				Furnished
280GSFJP-*5 (7)	265	Eng	161				Furnished	280GSFJP-*3 (7)	265	Eng	161				Furnished
280GSFJP-*8 (7)	265	Eng	147				Furnished	280GSFJP-*8 (7)	265	Eng	147				Furnished
280GTFJP-*5 (7)	240	Eng	180				Furnished	280GTFJP-*3 (7)	240	Eng	180				Furnished
280GTFJP-*8 (7)	240	Eng	173				Furnished	280GTFJP-*8 (7)	240	Eng	173				Furnished
870XAFJP-*5 (6)	591	Eng	82				Furnished	870XAFJP-*3 (6)	591	Eng	82				Furnished
870XBFJP-*5 (6)	557	Eng	87				Furnished	870XBFJP-*3 (6)	557	Eng	87				Furnished
870XCFJP-*5 (6)	522	Eng	93				Furnished	870XCFJP-*3 (6)	522	Eng	93				Furnished
870XDFJP-*5 (6)	490	Eng	99				Furnished	870XDFJP-*3 (6)	490	Eng	99				Furnished
870XEFJP-*5 (6)	429	Eng	113				Furnished	870XEFJP-*3 (6)	429	Eng	113				Furnished
870XFFJP-*5 (6)	379	Eng	128				Furnished	870XFFJP-*3 (6)	379	Eng	128				Furnished
870XGFJP-*5 (6)	334	Eng	145				Furnished	870XGFJP-*3 (6)	334	Eng	145				Furnished
870XHFJP-*5 (6)	315	Eng	154				Furnished	870XHFJP-*3 (6)	315	Eng	154				Furnished
870XJFJP-*5 (6)	295	Eng	164				Furnished	870XJFJP-*3 (6)	295	Eng	164				Furnished

Continued Next Page

CAUTION: Chelsea Recommends the Power Take-Off (PTO) installation on the 3000/4000 Series Transmissions to utilize a Vehicle Interface Module, or Chassis Manufacturers' equivalent controller to incorporate all the PTO control features available, this includes the "PTO Request" and "PTO Enable Output" feature. The "PTO Enable" circuit signals the Transmission Control Module (TCM) to maintain line pressure to the PTO Failure to provide this signal may not be sufficient to the PTO This may cause damage to the PTO and /or Transmission. Please see the Allison Transmission website and individual chassis manufacturer for installation details.

NOTE: When direct mounting a Parker P2 060 piston pump to a 267 Series PTO on the left (drivers) side opening, the PTO must be ordered as a "3" assembly arrangement for pump clearance.

NOTE: All models require a hose assembly. For the 267 Series, use 329130-1X for left side, 329130-6X for top right and 329130-4X for right side. THESE HOSE ASSEMBLIES MUST BE ORDERED SEPARATELY. For 280, 870/877 and 890/897 Series - All Mounting Hardware and Hose Assemblies are Included with the Unit.

NOTE: The 267 Series is not available in the "3" arrangement with an "XK" output due to interference with the pressure lube fitting.

NOTE: Do not use adapter gear assemblies on Allison 3000/4000 Series Automatic Transmissions.

NOTE: 280, 890 and 870 Family of PTOs stated Torque is for Intermittent and Continuous Duty Applications.

NOTE: 890/897 Series - The Combined Weight of Pump, Fittings and Hoses Should Not Exceed 120 Lbs. Refer to Owner's Manual (HY25-1890-M1/US) for Complete Details

(6) Input Gear Part No. 5-P-1428
(7) Input Gear Part No. 5-P-1491

Allison

Parker Hannifin Corporation
Chelsea Products Division
Olive Branch, MS 38654 USA

3000 (3000 Family- Side/Side PTO Provision w/ Retarder)

LEFT SIDE ONLY

TRANSMISSION GEAR DATA:
L.S. 10-BOLT Opening Gear FORWARD of Centerline
68 Teeth - L.H. HELIX

PITCH LINE TO APERTURE FACE:
1.7800" (45.2100MM)

RIGHT SIDE ONLY

TRANSMISSION GEAR DATA:
R.S. 10-BOLT Opening Gear FORWARD of Centerline
68 Teeth - L.H. HELIX

PITCH LINE TO APERTURE FACE:
1.7800" (45.2100MM)

Caution: Application Approval Required for PTO Output Shaft Speeds Above 2500 RPM

LEFT Side PTO Model	Inter. Torq.	Dir. Rot.	Engine % Fwd.	Engine % Rev.	Filler Block	Adapter Assy.	Stud Kit	RIGHT Side PTO Model	Inter. Torq.	Dir. Rot.	Engine % Fwd.	Engine % Rev.	Filler Block	Adapter Assy.	Stud Kit
ONE SPEED - POWERSHIFT (HYDRAULIC) EXTENDED SHAFT															
890MAFJW-*5 (6)	591	Eng	82				Furnished								
890MBFJW-*5 (6)	557	Eng	87				Furnished								
890MCFJW-*5 (6)	522	Eng	93				Furnished								
890MDFJW-*5 (6)	490	Eng	99				Furnished								
890MEFJW-*5 (6)	429	Eng	113				Furnished								
890MFFJW-*5 (6)	379	Eng	128				Furnished								
890MGFJW-*5 (6)	334	Eng	145				Furnished								
890MHFJW-*5 (6)	315	Eng	154				Furnished								
ONE SPEED - CONSTANT MESH EXTENDED SHAFT															
897MAFJW-*5 (6)	591	Eng	82				Furnished								
897MBFJW-*5 (6)	557	Eng	87				Furnished								
897MCFJW-*5 (6)	522	Eng	93				Furnished								
897MDFJW-*5 (6)	490	Eng	99				Furnished								
897MEFJW-*5 (6)	429	Eng	113				Furnished								
897MFFJW-*5 (6)	379	Eng	128				Furnished								
897MGFJW-*5 (6)	334	Eng	145				Furnished								
897MHFJW-*5 (6)	315	Eng	154				Furnished								

CAUTION: Chelsea Recommends the Power Take-Off (PTO) installation on the 3000/4000 Series Transmissions to utilize a Vehicle Interface Module, or Chassis Manufacturers' equivalent controller to incorporate all the PTO control features available, this includes the "PTO Request" and "PTO Enable Output" feature. The "PTO Enable" circuit signals the Transmission Control Module (TCM) to maintain line pressure to the PTO Failure to provide this signal may not be sufficient to the PTO This may cause damage to the PTO and /or Transmission. Please see the Allison Transmission website and individual chassis manufacturer for installation details.

NOTE: When direct mounting a Parker P2 060 piston pump to a 267 Series PTO on the left (drivers) side opening, the PTO must be ordered as a "3" assembly arrangement for pump clearance.

NOTE: All models require a hose assembly. For the 267 Series, use 329130-1X for left side, 329130-6X for top right and 329130-4X for right side. THESE HOSE ASSEMBLIES MUST BE ORDERED SEPARATELY. For 280, 870/877 and 890/897 Series - All Mounting Hardware and Hose Assemblies are Included with the Unit.

NOTE: The 267 Series is not available in the "3" arrangement with an "XK" output due to interference with the pressure lube fitting.

NOTE: Do not use adapter gear assemblies on Allison 3000/4000 Series Automatic Transmissions.

NOTE: 280, 890 and 870 Family of PTOs stated Torque is for Intermittent and Continuous Duty Applications.

NOTE: 890/897 Series - The Combined Weight of Pump, Fittings and Hoses Should Not Exceed 120 Lbs. Refer to Owner's Manual (HY25-1890-M1/US) for Complete Details

(6) Input Gear Part No. 5-P-1428

Parker Hannifin Corporation
Chelsea Products Division
Olive Branch, MS 38654 USA

4000 EVS	4500 EVS
4000 MH	4500 RDS
4000 RDS	B 500
4000 TRV	HD-4060P (Close Ratio)
4430	HD-4070P
4430 ORS	HD-4560P (Wide Ratio)
4430 SP	
4440	

LEFT SIDE ONLY

TRANSMISSION GEAR DATA:
L.S. 10-BOLT Opening Gear FORWARD of Centerline
97 Teeth - L.H. HELIX

PITCH LINE TO APERTURE FACE:
1.7799" (45.2100MM)

TOP SIDE ONLY

TRANSMISSION GEAR DATA:
TOP 10-BOLT Opening Gear FORWARD of Centerline
97 Teeth - L.H. HELIX

PITCH LINE TO APERTURE FACE:
1.7799" (45.2100MM)

Caution: Application Approval Required for PTO Output Shaft Speeds Above 2500 RPM

LEFT Side PTO Model	Inter. Torq.	Dir. Rot.	Engine % Fwd.	Engine % Rev.	Filler Block	Adapter Assy.	Stud Kit	TOP Side PTO Model	Inter. Torq.	Dir. Rot.	Engine % Fwd.	Engine % Rev.	Filler Block	Adapter Assy.	Stud Kit
ONE SPEED - TWO GEAR - CONSTANT MESH															
267SBFJP-*5 (4)	402	Eng	103				Furnished	267SBFJP-*3 (4)	402	Eng	103				Furnished
267SDFJP-*5 (3)	390	Eng	123				Furnished	267SDFJP-*3 (4)	390	Eng	123				Furnished
267SGFJP-*5 (2)	360	Eng	147				Furnished	267SGFJP-*3 (2)	360	Eng	147				Furnished
267SMFJP-*5 (5)	318	Eng	184				Furnished	267SMFJP-*3 (5)	318	Eng	184				Furnished
267SSFJP-*5 (1)	265	Eng	229				Furnished	267SSFJP-*3 (1)	265	Eng	229				Furnished
267XBFJP-*5 (8)	335	Eng	103				Furnished	267XBFJP-*3 (8)	335	Eng	103				Furnished
267XDFJP-*5 (9)	325	Eng	123				Furnished	267XDFJP-*3 (9)	325	Eng	123				Furnished
267XGFJP-*5 (10)	300	Eng	147				Furnished	267XGFJP-*3 (10)	300	Eng	147				Furnished
267XMFJP-*5 (11)	265	Eng	184				Furnished	267XMFJP-*3 (11)	265	Eng	184				Furnished
267XSFJP-*5 (1)	250	Eng	229				Furnished	267XSFJP-*3 (1)	250	Eng	229				Furnished
287GBFJP-*5 (7)	300	Eng	85				Furnished	287GBFJP-*5 (7)	300	Eng	85				Furnished
287GBFJP-*8 (7)	300	Eng	81				Furnished	287GBFJP-*8 (7)	300	Eng	81				Furnished
287GCFJP-*5 (7)	390	Eng	103				Furnished	287GCFJP-*5 (7)	390	Eng	103				Furnished
287GCFJP-*8 (7)	390	Eng	97				Furnished	287GCFJP-*8 (7)	390	Eng	97				Furnished
287GDFJP-*5 (7)	390	Eng	123				Furnished	287GDFJP-*5 (7)	390	Eng	123				Furnished
287GDFJP-*8 (7)	390	Eng	116				Furnished	287GDFJP-*8 (7)	390	Eng	116				Furnished
287GGFJP-*5 (7)	360	Eng	147				Furnished	287GGFJP-*5 (7)	360	Eng	147				Furnished
287GGFJP-*8 (7)	360	Eng	137				Furnished	287GGFJP-*8 (7)	360	Eng	137				Furnished
287GKFJP-*5 (7)	340	Eng	164				Furnished	287GKFJP-*5 (7)	340	Eng	164				Furnished
287GMFJP-*5 (7)	318	Eng	184				Furnished	287GMFJP-*5 (7)	318	Eng	184				Furnished
287GMFJP-*8 (7)	318	Eng	170				Furnished	287GMFJP-*8 (7)	318	Eng	170				Furnished
287GPFJP-*5 (7)	290	Eng	205				Furnished	287GPFJP-*5 (7)	290	Eng	205				Furnished
287GPFJP-*8 (7)	290	Eng	189				Furnished	287GPFJP-*8 (7)	290	Eng	189				Furnished
287GSFJP-*5 (7)	265	Eng	229				Furnished	287GSFJP-*5 (7)	265	Eng	229				Furnished
287GSFJP-*8 (7)	265	Eng	210				Furnished	287GSFJP-*8 (7)	265	Eng	210				Furnished
877XAFJP-*5 (6)	591	Eng	116				Furnished	877XAFJP-*3 (6)	591	Eng	116				Furnished
877XBFJP-*5 (6)	552	Eng	124				Furnished	877XBFJP-*3 (6)	552	Eng	124				Furnished
877XCFJP-*5 (6)	515	Eng	133				Furnished	877XCFJP-*3 (6)	515	Eng	133				Furnished
877XDFJP-*5 (6)	482	Eng	142				Furnished	877XDFJP-*3 (6)	482	Eng	142				Furnished
877XEFJP-*5 (6)	425	Eng	161				Furnished	877XEFJP-*3 (6)	425	Eng	161				Furnished
877XFFJP-*5 (6)	376	Eng	182				Furnished	877XFFJP-*3 (6)	376	Eng	182				Furnished
877XGFJP-*5 (6)	332	Eng	207				Furnished	877XGFJP-*3 (6)	332	Eng	207				Furnished

Continued Next Page

CAUTION: Chelsea Recommends the Power Take-Off (PTO) installation on the 3000/4000 Series Transmissions to utilize a Vehicle Interface Module, or Chassis Manufacturers' equivalent controller to incorporate all the PTO control features available, this includes the "PTO Request" and "PTO Enable Output" feature. The "PTO Enable" circuit signals the Transmission Control Module (TCM) to maintain line pressure to the PTO Failure to provide this signal may not be sufficient to the PTO This may cause damage to the PTO and /or Transmission. Please see the Allison Transmission website and individual chassis manufacturer for installation details.

CAUTION: The Torque Rating on Certain Ratios is Restricted by Allison Transmission to a Torque Limit of 685 Ft.lbs on their PTO Drive Gear.

NOTE: LEFT SIDE - 870/877/890/897 PTOs may encounter interference with leaf spring assembly when using the 3 or 5 arrangement on the Peterbilt 320 chassis.

NOTE: The Right Side opening is located at approximately 1 o'clock when viewed from the rear. All PTOs mounted in this location require pressure lubrication.

NOTE: Do not use Adapter Gear Assemblies on Allison 3000/4000 Series Automatic Transmissions.

NOTE: All models require a hose assembly. For the 267 Series, use 329130-1X for left side, 329130-6X for top right and 329130-4X for right side. THESE HOSE ASSEMBLIES MUST BE ORDERED SEPARATELY. For 280, 870/877 and 890/897 Series - All Mounting Hardware and Hose Assemblies are Included with the Unit.

NOTE: The 267 Series is not available in the 3 arrangement with an "XK" output due to interference with the pressure lube fitting.

NOTE: 890 Family - The Combined Weight of Pump, Fittings and Hoses Should Not Exceed 120 Lbs. Refer to Owner's Manual (HY25-1890-M1/US) for Complete Details.

NOTE: 280, 890 and 870 Family of PTOs stated Torque is for Intermittent and Continuous Duty Applications.

(1) Input Gear Part No. 5-P-1173
(2) Input Gear Part No. 5-P-1225
(3) Input Gear Part No. 5-P-1293
(4) Input Gear Part No. 5-P-1350
(5) Input Gear Part No. 5-P-1351
(6) Input Gear Part No. 5-P-1428
(7) Input Gear Part No. 5-P-1491
(8) Input Gear Part No. 5-P-912
(9) Input Gear Part No. 5-P-913
(10) Input Gear Part No. 5-P-914
(11) Input Gear Part No. 5-P-915

Parker Hannifin Corporation
Chelsea Products Division
Olive Branch, MS 38654 USA

4000 EVS	4500 EVS
4000 MH	4500 RDS
4000 RDS	B 500
4000 TRV	HD-4060P (Close Ratio)
4430	HD-4070P
4430 ORS	HD-4560P (Wide Ratio)
4430 SP	
4440	

LEFT SIDE ONLY

TRANSMISSION GEAR DATA:
L.S. 10-BOLT Opening Gear FORWARD of Centerline
97 Teeth - L.H. HELIX

PITCH LINE TO APERTURE FACE:
1.7799" (45.2100MM)

TOP SIDE ONLY

TRANSMISSION GEAR DATA:
TOP 10-BOLT Opening Gear FORWARD of Centerline
97 Teeth - L.H. HELIX

PITCH LINE TO APERTURE FACE:
1.7799" (45.2100MM)

Caution: Application Approval Required for PTO Output Shaft Speeds Above 2500 RPM

LEFT Side PTO Model	Inter. Torq.	Dir. Rot.	Engine % Fwd.	Engine % Rev.	Filler Block	Adapter Assy.	Stud Kit	TOP Side PTO Model	Inter. Torq.	Dir. Rot.	Engine % Fwd.	Engine % Rev.	Filler Block	Adapter Assy.	Stud Kit
ONE SPEED - TWO GEAR - CONSTANT MESH															
877XHFJP-*5 (6)	312	Eng	220				Furnished	877XHFJP-*3 (6)	312	Eng	220				Furnished
877XJFJP-*5 (6)	293	Eng	234				Furnished	877XJFJP-*3 (6)	293	Eng	234				Furnished
ONE SPEED - TWO GEAR - POWERSHIFT (HYDRAULIC)															
280GBFJP-*5 (7)	300	Eng	85				Furnished	280GBFJP-*5 (7)	300	Eng	85				Furnished
280GBFJP-*8 (7)	300	Eng	81				Furnished	280GBFJP-*8 (7)	300	Eng	81				Furnished
280GCFJP-*5 (7)	390	Eng	103				Furnished	280GCFJP-*5 (7)	390	Eng	103				Furnished
280GCFJP-*8 (7)	390	Eng	97				Furnished	280GCFJP-*8 (7)	390	Eng	97				Furnished
280GDFJP-*5 (7)	390	Eng	123				Furnished	280GDFJP-*5 (7)	390	Eng	123				Furnished
280GDFJP-*8 (7)	390	Eng	116				Furnished	280GDFJP-*8 (7)	390	Eng	116				Furnished
280GGFJP-*5 (7)	360	Eng	147				Furnished	280GGFJP-*5 (7)	360	Eng	147				Furnished
280GGFJP-*8 (7)	360	Eng	137				Furnished	280GGFJP-*8 (7)	360	Eng	137				Furnished
280GKFJP-*5 (7)	340	Eng	164				Furnished	280GKFJP-*5 (7)	340	Eng	164				Furnished
280GMFJP-*5 (7)	318	Eng	184				Furnished	280GMFJP-*5 (7)	318	Eng	184				Furnished
280GMFJP-*8 (7)	318	Eng	170				Furnished	280GMFJP-*8 (7)	318	Eng	170				Furnished
280GPFJP-*5 (7)	290	Eng	205				Furnished	280GPFJP-*5 (7)	290	Eng	205				Furnished
280GPFJP-*8 (7)	290	Eng	189				Furnished	280GPFJP-*8 (7)	290	Eng	189				Furnished
280GSFJP-*5 (7)	265	Eng	229				Furnished	280GSFJP-*5 (7)	265	Eng	229				Furnished
280GSFJP-*8 (7)	265	Eng	210				Furnished	280GSFJP-*8 (7)	265	Eng	210				Furnished
870XAFJP-*5 (6)	591	Eng	116				Furnished	870XAFJP-*3 (6)	591	Eng	116				Furnished
870XBFJP-*5 (6)	552	Eng	124				Furnished	870XBFJP-*3 (6)	552	Eng	124				Furnished
870XCFJP-*5 (6)	515	Eng	133				Furnished	870XCFJP-*3 (6)	515	Eng	133				Furnished
870XDFJP-*5 (6)	482	Eng	142				Furnished	870XDFJP-*3 (6)	482	Eng	142				Furnished
870XEFJP-*5 (6)	425	Eng	161				Furnished	870XEFJP-*3 (6)	425	Eng	161				Furnished
870XFFJP-*5 (6)	376	Eng	182				Furnished	870XFFJP-*3 (6)	376	Eng	182				Furnished
870XGFJP-*5 (6)	332	Eng	207				Furnished	870XGFJP-*3 (6)	332	Eng	207				Furnished
870XHFJP-*5 (6)	312	Eng	220				Furnished	870XHFJP-*3 (6)	312	Eng	220				Furnished
870XJFJP-*5 (6)	293	Eng	234				Furnished	870XJFJP-*3 (6)	293	Eng	234				Furnished
ONE SPEED - POWERSHIFT (HYDRAULIC) EXTENDED SHAFT															
890HAFJW-*5 (6)	591	Eng	116				Furnished	890UAFJW-*5 (6)	591	Eng	116				Furnished
890HBFJW-*5 (6)	552	Eng	124				Furnished	890UBFJW-*5 (6)	552	Eng	124				Furnished

Continued Next Page

CAUTION: Chelsea Recommends the Power Take-Off (PTO) installation on the 3000/4000 Series Transmissions to utilize a Vehicle Interface Module, or Chassis Manufacturers' equivalent controller to incorporate all the PTO control features available, this includes the "PTO Request" and "PTO Enable Output" feature. The "PTO Enable" circuit signals the Transmission Control Module (TCM) to maintain line pressure to the PTO Failure to provide this signal may not be sufficient to the PTO This may cause damage to the PTO and /or Transmission. Please see the Allison Transmission website and individual chassis manufacturer for installation details.

CAUTION: The Torque Rating on Certain Ratios is Restricted by Allison Transmission to a Torque Limit of 685 Ft.lbs on their PTO Drive Gear.

NOTE: LEFT SIDE - 870/877/890/897 PTOs may encounter interference with leaf spring assembly when using the 3 or 5 arrangement on the Peterbilt 320 chassis.

NOTE: The Right Side opening is located at approximately 1 o'clock when viewed from the rear. All PTOs mounted in this location require pressure lubrication.

NOTE: Do not use Adapter Gear Assemblies on Allison 3000/4000 Series Automatic Transmissions.

NOTE: All models require a hose assembly. For the 267 Series, use 329130-1X for left side, 329130-6X for top right and 329130-4X for right side. THESE HOSE ASSEMBLIES MUST BE ORDERED SEPARATELY. For 280, 870/877 and 890/897 Series - All Mounting Hardware and Hose Assemblies are Included with the Unit.

NOTE: The 267 Series is not available in the 3 arrangement with an "XK" output due to interference with the pressure lube fitting.

NOTE: 890 Family - The Combined Weight of Pump, Fittings and Hoses Should Not Exceed 120 Lbs. Refer to Owner's Manual (HY25-1890-M1/US) for Complete Details.

NOTE: 280, 890 and 870 Family of PTOs stated Torque is for Intermittent and Continuous Duty Applications.

(6) Input Gear Part No. 5-P-1428
(7) Input Gear Part No. 5-P-1491

Parker Hannifin Corporation
Chelsea Products Division
Olive Branch, MS 38654 USA

4000 EVS	4500 EVS
4000 MH	4500 RDS
4000 RDS	B 500
4000 TRV	HD-4060P (Close Ratio)
4430	HD-4070P
4430 ORS	HD-4560P (Wide Ratio)
4430 SP	
4440	

LEFT SIDE ONLY

TRANSMISSION GEAR DATA:
L.S. 10-BOLT Opening Gear FORWARD of Centerline
97 Teeth - L.H. HELIX

PITCH LINE TO APERTURE FACE:
1.7799" (45.2100MM)

TOP SIDE ONLY

TRANSMISSION GEAR DATA:
TOP 10-BOLT Opening Gear FORWARD of Centerline
97 Teeth - L.H. HELIX

PITCH LINE TO APERTURE FACE:
1.7799" (45.2100MM)

Caution: Application Approval Required for PTO Output Shaft Speeds Above 2500 RPM

LEFT Side PTO Model	Inter. Torq.	Dir. Rot.	Engine % Fwd.	Engine % Rev.	Filler Block	Adapter Assy.	Stud Kit	TOP Side PTO Model	Inter. Torq.	Dir. Rot.	Engine % Fwd.	Engine % Rev.	Filler Block	Adapter Assy.	Stud Kit
ONE SPEED - POWERSHIFT (HYDRAULIC) EXTENDED SHAFT															
890HCFJW-*5 (6)	515	Eng	133				Furnished	890UCFJW-*5 (6)	515	Eng	133				Furnished
890HDFJW-*5 (6)	482	Eng	142				Furnished	890UDFJW-*5 (6)	482	Eng	142				Furnished
890HEFJW-*5 (6)	425	Eng	161				Furnished	890UEFJW-*5 (6)	425	Eng	161				Furnished
890HFFJW-*5 (6)	376	Eng	182				Furnished	890UFFJW-*5 (6)	376	Eng	182				Furnished
ONE SPEED - CONSTANT MESH EXTENDED SHAFT															
897HAFJW-*5 (6)	591	Eng	116				Furnished	897UAFJW-*5 (6)	591	Eng	116				Furnished
897HBFJW-*5 (6)	552	Eng	124				Furnished	897UBFJW-*5 (6)	552	Eng	124				Furnished
897HCFJW-*5 (6)	515	Eng	133				Furnished	897UCFJW-*5 (6)	515	Eng	133				Furnished
897HDFJW-*5 (6)	482	Eng	142				Furnished	897UDFJW-*5 (6)	482	Eng	142				Furnished
897HEFJW-*5 (6)	425	Eng	161				Furnished	897UEFJW-*5 (6)	425	Eng	161				Furnished
897HFFJW-*5 (6)	376	Eng	182				Furnished	897UFFJW-*5 (6)	376	Eng	182				Furnished

CAUTION: Chelsea Recommends the Power Take-Off (PTO) installation on the 3000/4000 Series Transmissions to utilize a Vehicle Interface Module, or Chassis Manufacturers' equivalent controller to incorporate all the PTO control features available, this includes the "PTO Request" and "PTO Enable Output" feature. The "PTO Enable" circuit signals the Transmission Control Module (TCM) to maintain line pressure to the PTO Failure to provide this signal may not be sufficient to the PTO This may cause damage to the PTO and /or Transmission. Please see the Allison Transmission website and individual chassis manufacturer for installation details.

CAUTION: The Torque Rating on Certain Ratios is Restricted by Allison Transmission to a Torque Limit of 685 Ft.lbs on their PTO Drive Gear.

NOTE: LEFT SIDE - 870/877/890/897 PTOs may encounter interference with leaf spring assembly when using the 3 or 5 arrangement on the Peterbilt 320 chassis.

NOTE: The Right Side opening is located at approximately 1 o'clock when viewed from the rear. All PTOs mounted in this location require pressure lubrication.

NOTE: Do not use Adapter Gear Assemblies on Allison 3000/4000 Series Automatic Transmissions.

NOTE: All models require a hose assembly. For the 267 Series, use 329130-1X for left side, 329130-6X for top right and 329130-4X for right side. THESE HOSE ASSEMBLIES MUST BE ORDERED SEPARATELY. For 280, 870/877 and 890/897 Series - All Mounting Hardware and Hose Assemblies are Included with the Unit.

NOTE: The 267 Series is not available in the 3 arrangement with an "XK" output due to interference with the pressure lube fitting.

NOTE: 890 Family - The Combined Weight of Pump, Fittings and Hoses Should Not Exceed 120 Lbs. Refer to Owner's Manual (HY25-1890-M1/US) for Complete Details.

NOTE: 280, 890 and 870 Family of PTOs stated Torque is for Intermittent and Continuous Duty Applications.

(6) Input Gear Part No. 5-P-1428

Parker Hannifin Corporation
Chelsea Products Division
Olive Branch, MS 38654 USA

4000 (4000 Family w/ Integral Cooler)

LEFT SIDE ONLY

TRANSMISSION GEAR DATA:
L.S. 10-BOLT Opening Gear FORWARD of Centerline
97 Teeth - L.H. HELIX

PITCH LINE TO APERTURE FACE:
1.7799" (45.2100MM)

TOP SIDE ONLY

TRANSMISSION GEAR DATA:
TOP 10-BOLT Opening Gear FORWARD of Centerline
97 Teeth - L.H. HELIX

PITCH LINE TO APERTURE FACE:
1.7799" (45.2100MM)

Caution: Application Approval Required for PTO Output Shaft Speeds Above 2500 RPM

LEFT Side PTO Model	Inter. Torq.	Dir. Rot.	Engine % Fwd.	Engine % Rev.	Filler Block	Adapter Assy.	Stud Kit	TOP Side PTO Model	Inter. Torq.	Dir. Rot.	Engine % Fwd.	Engine % Rev.	Filler Block	Adapter Assy.	Stud Kit
ONE SPEED - TWO GEAR - CONSTANT MESH															
267SBFJP-*5 (4)	402	Eng	103				Furnished	267SBFJP-*3 (4)	402	Eng	103				Furnished
267SDFJP-*5 (3)	390	Eng	123				Furnished	267SDFJP-*3 (4)	390	Eng	123				Furnished
267SGFJP-*5 (2)	360	Eng	147				Furnished	267SGFJP-*3 (2)	360	Eng	147				Furnished
267SMFJP-*5 (5)	318	Eng	184				Furnished	267SMFJP-*3 (5)	318	Eng	184				Furnished
267SSFJP-*5 (1)	265	Eng	229				Furnished	267SSFJP-*3 (1)	265	Eng	229				Furnished
267XBFJP-*5 (8)	335	Eng	103				Furnished	267XBFJP-*3 (8)	335	Eng	103				Furnished
267XDFJP-*5 (9)	325	Eng	123				Furnished	267XDFJP-*3 (9)	325	Eng	123				Furnished
267XGFJP-*5 (10)	300	Eng	147				Furnished	267XGFJP-*3 (10)	300	Eng	147				Furnished
267XMFJP-*5 (11)	265	Eng	184				Furnished	267XMFJP-*3 (11)	265	Eng	184				Furnished
267XSFJP-*5 (1)	250	Eng	229				Furnished	267XSFJP-*3 (1)	250	Eng	229				Furnished
287GBFJP-*5 (7)	300	Eng	85				Furnished	287GBFJP-*5 (7)	300	Eng	85				Furnished
287GBFJP-*8 (7)	300	Eng	81				Furnished	287GBFJP-*8 (7)	300	Eng	81				Furnished
287GCFJP-*5 (7)	390	Eng	103				Furnished	287GCFJP-*5 (7)	390	Eng	103				Furnished
287GCFJP-*8 (7)	390	Eng	97				Furnished	287GCFJP-*8 (7)	390	Eng	97				Furnished
287GDFJP-*5 (7)	390	Eng	123				Furnished	287GDFJP-*5 (7)	390	Eng	123				Furnished
287GDFJP-*8 (7)	390	Eng	116				Furnished	287GDFJP-*8 (7)	390	Eng	116				Furnished
287GGFJP-*5 (7)	360	Eng	147				Furnished	287GGFJP-*5 (7)	360	Eng	147				Furnished
287GGFJP-*8 (7)	360	Eng	137				Furnished	287GGFJP-*8 (7)	360	Eng	137				Furnished
287GKFJP-*5 (7)	340	Eng	164				Furnished	287GKFJP-*5 (7)	340	Eng	164				Furnished
287GMFJP-*5 (7)	318	Eng	184				Furnished	287GMFJP-*5 (7)	318	Eng	184				Furnished
287GMFJP-*8 (7)	318	Eng	170				Furnished	287GMFJP-*8 (7)	318	Eng	170				Furnished
287GPFJP-*5 (7)	290	Eng	205				Furnished	287GPFJP-*5 (7)	290	Eng	205				Furnished
287GPFJP-*8 (7)	290	Eng	189				Furnished	287GPFJP-*8 (7)	290	Eng	189				Furnished
287GSFJP-*5 (7)	265	Eng	229				Furnished	287GSFJP-*5 (7)	265	Eng	229				Furnished
287GSFJP-*8 (7)	265	Eng	210				Furnished	287GSFJP-*8 (7)	265	Eng	210				Furnished
877XAFJP-*5 (6)	591	Eng	116				Furnished	877XAFJP-*3 (6)	591	Eng	116				Furnished
877XBFJP-*5 (6)	552	Eng	124				Furnished	877XBFJP-*3 (6)	552	Eng	124				Furnished
877XCFJP-*5 (6)	515	Eng	133				Furnished	877XCFJP-*3 (6)	515	Eng	133				Furnished
877XDFJP-*5 (6)	482	Eng	142				Furnished	877XDFJP-*3 (6)	482	Eng	142				Furnished
877XEFJP-*5 (6)	425	Eng	161				Furnished	877XEFJP-*3 (6)	425	Eng	161				Furnished
877XFFJP-*5 (6)	376	Eng	182				Furnished	877XFFJP-*3 (6)	376	Eng	182				Furnished
877XGFJP-*5 (6)	332	Eng	207				Furnished	877XGFJP-*3 (6)	332	Eng	207				Furnished

Continued Next Page

CAUTION: The Torque Rating on Certain Ratios is Restricted by Allison Transmission to a Torque Limit of 685 Ft.lbs on their PTO Drive Gear.

CAUTION: Chelsea Recommends the Power Take-Off (PTO) installation on the 3000/4000 Series Transmissions to utilize a Vehicle Interface Module, or Chassis Manufacturers' equivalent controller to incorporate all the PTO control features available, this includes the "PTO Request" and "PTO Enable Output" feature. The "PTO Enable" circuit signals the Transmission Control Module (TCM) to maintain line pressure to the PTO Failure to provide this signal may not be sufficient to the PTO This may cause damage to the PTO and /or Transmission. Please see the Allison Transmission website and individual chassis manufacturer for installation details.

NOTE: All models require a hose assembly. For the 267 Series, use 329130-1X for left side, 329130-6X for top right and 329130-4X for right side. THESE HOSE ASSEMBLIES MUST BE ORDERED SEPARATELY. For 280, 870/877 and 890/897 Series - All Mounting Hardware and Hose Assemblies are Included with the Unit.

NOTE: 890 Family - The Combined Weight of Pump, Fittings and Hoses Should Not Exceed 120 Lbs. Refer to Owner's Manual (HY25-1890-M1/US) for Complete Details.

NOTE: The Right Side opening is located at approximately 1 o'clock when viewed from the rear. All PTOs mounted in this location require pressure lubrication.

NOTE: 280, 890 and 870 Family of PTOs stated Torque is for Intermittent and Continuous Duty Applications.

(1) Input Gear Part No. 5-P-1173
(2) Input Gear Part No. 5-P-1225
(3) Input Gear Part No. 5-P-1293
(4) Input Gear Part No. 5-P-1350
(5) Input Gear Part No. 5-P-1351
(6) Input Gear Part No. 5-P-1428
(7) Input Gear Part No. 5-P-1491
(8) Input Gear Part No. 5-P-912
(9) Input Gear Part No. 5-P-913
(10) Input Gear Part No. 5-P-914
(11) Input Gear Part No. 5-P-915

Parker Hannifin Corporation
Chelsea Products Division
Olive Branch, MS 38654 USA

4000 (4000 Family w/ Integral Cooler)

LEFT SIDE ONLY

TRANSMISSION GEAR DATA:
L.S. 10-BOLT Opening Gear FORWARD of Centerline
97 Teeth - L.H. HELIX

PITCH LINE TO APERTURE FACE:
1.7799" (45.2100MM)

TOP SIDE ONLY

TRANSMISSION GEAR DATA:
TOP 10-BOLT Opening Gear FORWARD of Centerline
97 Teeth - L.H. HELIX

PITCH LINE TO APERTURE FACE:
1.7799" (45.2100MM)

Caution: Application Approval Required for PTO Output Shaft Speeds Above 2500 RPM

LEFT Side PTO Model	Inter. Torq.	Dir. Rot.	Engine % Fwd.	Engine % Rev.	Filler Block	Adapter Assy.	Stud Kit	TOP Side PTO Model	Inter. Torq.	Dir. Rot.	Engine % Fwd.	Engine % Rev.	Filler Block	Adapter Assy.	Stud Kit
ONE SPEED - TWO GEAR - CONSTANT MESH															
877XHFJP-*5 (6)	312	Eng	220				Furnished	877XHFJP-*3 (6)	312	Eng	220				Furnished
877XJFJP-*5 (6)	293	Eng	234				Furnished	877XJFJP-*3 (6)	293	Eng	234				Furnished
ONE SPEED - TWO GEAR - POWERSHIFT (HYDRAULIC)															
280GBFJP-*5 (7)	300	Eng	85				Furnished	280GBFJP-*5 (7)	300	Eng	85				Furnished
280GBFJP-*8 (7)	300	Eng	81				Furnished	280GBFJP-*8 (7)	300	Eng	81				Furnished
280GCFJP-*5 (7)	390	Eng	103				Furnished	280GCFJP-*5 (7)	390	Eng	103				Furnished
280GCFJP-*8 (7)	390	Eng	97				Furnished	280GCFJP-*8 (7)	390	Eng	97				Furnished
280GDFJP-*5 (7)	390	Eng	123				Furnished	280GDFJP-*5 (7)	390	Eng	123				Furnished
280GDFJP-*8 (7)	390	Eng	116				Furnished	280GDFJP-*8 (7)	390	Eng	116				Furnished
280GGFJP-*5 (7)	360	Eng	147				Furnished	280GGFJP-*5 (7)	360	Eng	147				Furnished
280GGFJP-*8 (7)	360	Eng	137				Furnished	280GGFJP-*8 (7)	360	Eng	137				Furnished
280GKFJP-*5 (7)	340	Eng	164				Furnished	280GKFJP-*5 (7)	340	Eng	164				Furnished
280GMFJP-*5 (7)	318	Eng	184				Furnished	280GMFJP-*5 (7)	318	Eng	184				Furnished
280GMFJP-*8 (7)	318	Eng	170				Furnished	280GMFJP-*8 (7)	318	Eng	170				Furnished
280GPFJP-*5 (7)	290	Eng	205				Furnished	280GPFJP-*5 (7)	290	Eng	205				Furnished
280GPFJP-*8 (7)	290	Eng	189				Furnished	280GPFJP-*8 (7)	290	Eng	189				Furnished
280GSFJP-*5 (7)	265	Eng	229				Furnished	280GSFJP-*5 (7)	265	Eng	229				Furnished
280GSFJP-*8 (7)	265	Eng	210				Furnished	280GSFJP-*8 (7)	265	Eng	210				Furnished
870XAFJP-*5 (6)	591	Eng	116				Furnished	870XAFJP-*3 (6)	591	Eng	116				Furnished
870XBFJP-*5 (6)	552	Eng	124				Furnished	870XBFJP-*3 (6)	552	Eng	124				Furnished
870XCFJP-*5 (6)	515	Eng	133				Furnished	870XCFJP-*3 (6)	515	Eng	133				Furnished
870XDFJP-*5 (6)	482	Eng	142				Furnished	870XDFJP-*3 (6)	482	Eng	142				Furnished
870XEFJP-*5 (6)	425	Eng	161				Furnished	870XEFJP-*3 (6)	425	Eng	161				Furnished
870XFFJP-*5 (6)	376	Eng	182				Furnished	870XFFJP-*3 (6)	376	Eng	182				Furnished
870XGFJP-*5 (6)	332	Eng	207				Furnished	870XGFJP-*3 (6)	332	Eng	207				Furnished
870XHFJP-*5 (6)	312	Eng	220				Furnished	870XHFJP-*3 (6)	312	Eng	220				Furnished
870XJFJP-*5 (6)	293	Eng	234				Furnished	870XJFJP-*3 (6)	293	Eng	234				Furnished
ONE SPEED - POWERSHIFT (HYDRAULIC) EXTENDED SHAFT															
890CAFJW-*3 (6)	591	Eng	116				Furnished	890UAFJW-*5 (6)	591	Eng	116				Furnished
890CBFJW-*3 (6)	552	Eng	124				Furnished	890UBFJW-*5 (6)	552	Eng	124				Furnished

Continued Next Page

CAUTION: The Torque Rating on Certain Ratios is Restricted by Allison Transmission to a Torque Limit of 685 Ft.lbs on their PTO Drive Gear.

CAUTION: Chelsea Recommends the Power Take-Off (PTO) installation on the 3000/4000 Series Transmissions to utilize a Vehicle Interface Module, or Chassis Manufacturers' equivalent controller to incorporate all the PTO control features available, this includes the "PTO Request" and "PTO Enable Output" feature. The "PTO Enable" circuit signals the Transmission Control Module (TCM) to maintain line pressure to the PTO Failure to provide this signal may not be sufficient to the PTO This may cause damage to the PTO and /or Transmission. Please see the Allison Transmission website and individual chassis manufacturer for installation details.

NOTE: All models require a hose assembly. For the 267 Series, use 329130-1X for left side, 329130-6X for top right and 329130-4X for right side. THESE HOSE ASSEMBLIES MUST BE ORDERED SEPARATELY. For 280, 870/877 and 890/897 Series - All Mounting Hardware and Hose Assemblies are Included with the Unit.

NOTE: 890 Family - The Combined Weight of Pump, Fittings and Hoses Should Not Exceed 120 Lbs. Refer to Owner's Manual (HY25-1890-M1/US) for Complete Details.

NOTE: The Right Side opening is located at approximately 1 o'clock when viewed from the rear. All PTOs mounted in this location require pressure lubrication.

NOTE: 280, 890 and 870 Family of PTOs stated Torque is for Intermittent and Continuous Duty Applications.

(6) Input Gear Part No. 5-P-1428
(7) Input Gear Part No. 5-P-1491

Parker Hannifin Corporation
Chelsea Products Division
Olive Branch, MS 38654 USA

4000 (4000 Family w/ Integral Cooler)

LEFT SIDE ONLY

TRANSMISSION GEAR DATA:
L.S. 10-BOLT Opening Gear FORWARD of Centerline
97 Teeth - L.H. HELIX

PITCH LINE TO APERTURE FACE:
1.7799" (45.2100MM)

TOP SIDE ONLY

TRANSMISSION GEAR DATA:
TOP 10-BOLT Opening Gear FORWARD of Centerline
97 Teeth - L.H. HELIX

PITCH LINE TO APERTURE FACE:
1.7799" (45.2100MM)

Caution: Application Approval Required for PTO Output Shaft Speeds Above 2500 RPM

LEFT Side PTO Model	Inter. Torq.	Dir. Rot.	Engine % Fwd.	Engine % Rev.	Filler Block	Adapter Assy.	Stud Kit	TOP Side PTO Model	Inter. Torq.	Dir. Rot.	Engine % Fwd.	Engine % Rev.	Filler Block	Adapter Assy.	Stud Kit
ONE SPEED - POWERSHIFT (HYDRAULIC) EXTENDED SHAFT															
890CCFJW-*3 (6)	515	Eng	133				Furnished	890UCFJW-*5 (6)	515	Eng	133				Furnished
890CDFJW-*3 (6)	482	Eng	142				Furnished	890UDFJW-*5 (6)	482	Eng	142				Furnished
890CEFJW-*3 (6)	425	Eng	161				Furnished	890UEFJW-*5 (6)	425	Eng	161				Furnished
890CFFJW-*3 (6)	376	Eng	182				Furnished	890UFFJW-*5 (6)	376	Eng	182				Furnished
ONE SPEED - CONSTANT MESH EXTENDED SHAFT															
897CAFJW-*3 (6)	591	Eng	116				Furnished	897UAFJW-*5 (6)	591	Eng	116				Furnished
897CBFJW-*3 (6)	552	Eng	124				Furnished	897UBFJW-*5 (6)	552	Eng	124				Furnished
897CCFJW-*3 (6)	515	Eng	133				Furnished	897UCFJW-*5 (6)	515	Eng	133				Furnished
897CDFJW-*3 (6)	482	Eng	142				Furnished	897UDFJW-*5 (6)	482	Eng	142				Furnished
897CEFJW-*3 (6)	425	Eng	161				Furnished	897UEFJW-*5 (6)	425	Eng	161				Furnished
897CFFJW-*3 (6)	376	Eng	182				Furnished	897UFFJW-*5 (6)	376	Eng	182				Furnished

CAUTION: The Torque Rating on Certain Ratios is Restricted by Allison Transmission to a Torque Limit of 685 Ft.lbs on their PTO Drive Gear.

CAUTION: Chelsea Recommends the Power Take-Off (PTO) installation on the 3000/4000 Series Transmissions to utilize a Vehicle Interface Module, or Chassis Manufacturers' equivalent controller to incorporate all the PTO control features available, this includes the "PTO Request" and "PTO Enable Output" feature. The "PTO Enable" circuit signals the Transmission Control Module (TCM) to maintain line pressure to the PTO Failure to provide this signal may not be sufficient to the PTO This may cause damage to the PTO and /or Transmission. Please see the Allison Transmission website and individual chassis manufacturer for installation details.

NOTE: All models require a hose assembly. For the 267 Series, use 329130-1X for left side, 329130-6X for top right and 329130-4X for right side. THESE HOSE ASSEMBLIES MUST BE ORDERED SEPARATELY. For 280, 870/877 and 890/897 Series - All Mounting Hardware and Hose Assemblies are Included with the Unit.

NOTE: 890 Family - The Combined Weight of Pump, Fittings and Hoses Should Not Exceed 120 Lbs. Refer to Owner's Manual (HY25-1890-M1/US) for Complete Details.

NOTE: The Right Side opening is located at approximately 1 o'clock when viewed from the rear. All PTOs mounted in this location require pressure lubrication.

NOTE: 280, 890 and 870 Family of PTOs stated Torque is for Intermittent and Continuous Duty Applications.

(6) Input Gear Part No. 5-P-1428

Parker Hannifin Corporation
Chelsea Products Division
Olive Branch, MS 38654 USA

4000 (4000 Family w/ Retarder)

LEFT SIDE ONLY

TRANSMISSION GEAR DATA:
L.S. 10-BOLT Opening Gear FORWARD of Centerline
97 Teeth - L.H. HELIX

PITCH LINE TO APERTURE FACE:
1.7799" (45.2100MM)

TOP SIDE ONLY

TRANSMISSION GEAR DATA:
TOP 10-BOLT Opening Gear FORWARD of Centerline
97 Teeth - L.H. HELIX

PITCH LINE TO APERTURE FACE:
1.7799" (45.2100MM)

Caution: Application Approval Required for PTO Output Shaft Speeds Above 2500 RPM

ONE SPEED - TWO GEAR - CONSTANT MESH

LEFT Side PTO Model	Inter. Torq.	Dir. Rot.	Engine % Fwd.	Engine % Rev.	Filler Block	Adapter Assy.	Stud Kit	TOP Side PTO Model	Inter. Torq.	Dir. Rot.	Engine % Fwd.	Engine % Rev.	Filler Block	Adapter Assy.	Stud Kit
267SBFJP-*5 (4)	402	Eng	103				Furnished	267SBFJP-*3 (4)	402	Eng	103				Furnished
267SDFJP-*5 (3)	390	Eng	123				Furnished	267SDFJP-*3 (4)	390	Eng	123				Furnished
267SGFJP-*5 (2)	360	Eng	147				Furnished	267SGFJP-*3 (2)	360	Eng	147				Furnished
267SMFJP-*5 (5)	318	Eng	184				Furnished	267SMFJP-*3 (5)	318	Eng	184				Furnished
267SSFJP-*5 (1)	265	Eng	229				Furnished	267SSFJP-*3 (1)	265	Eng	229				Furnished
267XBFJP-*5 (8)	335	Eng	103				Furnished	267XBFJP-*3 (8)	335	Eng	103				Furnished
267XDFJP-*5 (9)	325	Eng	123				Furnished	267XDFJP-*3 (9)	325	Eng	123				Furnished
267XGFJP-*5 (10)	300	Eng	147				Furnished	267XGFJP-*3 (10)	300	Eng	147				Furnished
267XMFJP-*5 (11)	265	Eng	184				Furnished	267XMFJP-*3 (11)	265	Eng	184				Furnished
267XSFJP-*5 (1)	250	Eng	229				Furnished	267XSFJP-*3 (1)	250	Eng	229				Furnished
287GBFJP-*5 (7)	300	Eng	85				Furnished	287GBFJP-*5 (7)	300	Eng	85				Furnished
287GBFJP-*8 (7)	300	Eng	81				Furnished	287GBFJP-*8 (7)	300	Eng	81				Furnished
287GCFJP-*5 (7)	390	Eng	103				Furnished	287GCFJP-*5 (7)	390	Eng	103				Furnished
287GCFJP-*8 (7)	390	Eng	97				Furnished	287GCFJP-*8 (7)	390	Eng	97				Furnished
287GDFJP-*5 (7)	390	Eng	123				Furnished	287GDFJP-*5 (7)	390	Eng	123				Furnished
287GDFJP-*8 (7)	390	Eng	116				Furnished	287GDFJP-*8 (7)	390	Eng	116				Furnished
287GGFJP-*5 (7)	360	Eng	147				Furnished	287GGFJP-*5 (7)	360	Eng	147				Furnished
287GGFJP-*8 (7)	360	Eng	137				Furnished	287GGFJP-*8 (7)	360	Eng	137				Furnished
287GKFJP-*5 (7)	340	Eng	164				Furnished	287GKFJP-*5 (7)	340	Eng	164				Furnished
287GMFJP-*5 (7)	318	Eng	184				Furnished	287GMFJP-*5 (7)	318	Eng	184				Furnished
287GMFJP-*8 (7)	318	Eng	170				Furnished	287GMFJP-*8 (7)	318	Eng	170				Furnished
287GPFJP-*5 (7)	290	Eng	205				Furnished	287GPFJP-*5 (7)	290	Eng	205				Furnished
287GPFJP-*8 (7)	290	Eng	189				Furnished	287GPFJP-*8 (7)	290	Eng	189				Furnished
287GSFJP-*5 (7)	265	Eng	229				Furnished	287GSFJP-*5 (7)	265	Eng	229				Furnished
287GSFJP-*8 (7)	265	Eng	210				Furnished	287GSFJP-*8 (7)	265	Eng	210				Furnished
877XAFJP-*5 (6)	591	Eng	116				Furnished	877XAFJP-*3 (6)	591	Eng	116				Furnished
877XBFJP-*5 (6)	552	Eng	124				Furnished	877XBFJP-*3 (6)	552	Eng	124				Furnished
877XCFJP-*5 (6)	515	Eng	133				Furnished	877XCFJP-*3 (6)	515	Eng	133				Furnished
877XDFJP-*5 (6)	482	Eng	142				Furnished	877XDFJP-*3 (6)	482	Eng	142				Furnished
877XEFJP-*5 (6)	425	Eng	161				Furnished	877XEFJP-*3 (6)	425	Eng	161				Furnished
877XFFJP-*5 (6)	376	Eng	182				Furnished	877XFFJP-*3 (6)	376	Eng	182				Furnished
877XGFJP-*5 (6)	332	Eng	207				Furnished	877XGFJP-*3 (6)	332	Eng	207				Furnished

Continued Next Page

CAUTION: Chelsea Recommends the Power Take-Off (PTO) installation on the 3000/4000 Series Transmissions to utilize a Vehicle Interface Module, or Chassis Manufacturers' equivalent controller to incorporate all the PTO control features available, this includes the "PTO Request" and "PTO Enable Output" feature. The "PTO Enable" circuit signals the Transmission Control Module (TCM) to maintain line pressure to the PTO Failure to provide this signal may not be sufficient to the PTO This may cause damage to the PTO and /or Transmission. Please see the Allison Transmission website and individual chassis manufacturer for installation details.

CAUTION: The Torque Rating on Certain Ratios is Restricted by Allison Transmission to a Torque Limit of 685 Ft.lbs on their PTO Drive Gear.

NOTE: The Right Side opening is located at approximately 1 o'clock when veiwed from the rear. All PTOs mounted in this location require pressure lubrication.

NOTE: All models require a hose assembly. For the 267 Series, use 329130-1X for left side, 329130-6X for top right and 329130-4X for right side. THESE HOSE ASSEMBLIES MUST BE ORDERED SEPARATELY. For 280, 870/877 and 890/897 Series - All Mounting Hardware and Hose Assemblies are Included with the Unit.

NOTE: 280, 890 and 870 Family of PTOs stated Torque is for Intermittent and Continuous Duty Applications.

NOTE: 890 Family - The Combined Weight of Pump, Fittings and Hoses Should Not Exceed 120 Lbs. Refer to Owner's Manual (HY25-1890-M1/US) for Complete Details.

NOTE: The 267 Series is not available in the 3 arrangement with an "XK" output due to interference with the pressure lube fitting.

NOTE: Do not use Adapter Gear Assemblies on Allison 3000/4000 Series Automatic Transmissions.

(1) Input Gear Part No. 5-P-1173
(2) Input Gear Part No. 5-P-1225
(3) Input Gear Part No. 5-P-1293
(4) Input Gear Part No. 5-P-1350
(5) Input Gear Part No. 5-P-1351
(6) Input Gear Part No. 5-P-1428
(7) Input Gear Part No. 5-P-1491
(8) Input Gear Part No. 5-P-912
(9) Input Gear Part No. 5-P-913
(10) Input Gear Part No. 5-P-914
(11) Input Gear Part No. 5-P-915

Allison

Parker Hannifin Corporation
Chelsea Products Division
Olive Branch, MS 38654 USA

4000 (4000 Family w/ Retarder)

LEFT SIDE ONLY

TRANSMISSION GEAR DATA:
L.S. 10-BOLT Opening Gear FORWARD of Centerline
97 Teeth - L.H. HELIX

PITCH LINE TO APERTURE FACE:
1.7799" (45.2100MM)

TOP SIDE ONLY

TRANSMISSION GEAR DATA:
TOP 10-BOLT Opening Gear FORWARD of Centerline
97 Teeth - L.H. HELIX

PITCH LINE TO APERTURE FACE:
1.7799" (45.2100MM)

Caution: Application Approval Required for PTO Output Shaft Speeds Above 2500 RPM

LEFT Side PTO Model	Inter. Torq.	Dir. Rot.	Engine % Fwd.	Engine % Rev.	Filler Block	Adapter Assy.	Stud Kit	TOP Side PTO Model	Inter. Torq.	Dir. Rot.	Engine % Fwd.	Engine % Rev.	Filler Block	Adapter Assy.	Stud Kit
ONE SPEED - TWO GEAR - CONSTANT MESH															
877XHFJP-*5 (6)	312	Eng	220				Furnished	877XHFJP-*3 (6)	312	Eng	220				Furnished
877XJFJP-*5 (6)	293	Eng	234				Furnished	877XJFJP-*3 (6)	293	Eng	234				Furnished
ONE SPEED - TWO GEAR - POWERSHIFT (HYDRAULIC)															
280GBFJP-*5 (7)	300	Eng	85				Furnished	280GBFJP-*5 (7)	300	Eng	85				Furnished
280GBFJP-*8 (7)	300	Eng	81				Furnished	280GBFJP-*8 (7)	300	Eng	81				Furnished
280GCFJP-*5 (7)	390	Eng	103				Furnished	280GCFJP-*5 (7)	390	Eng	103				Furnished
280GCFJP-*8 (7)	390	Eng	97				Furnished	280GCFJP-*8 (7)	390	Eng	97				Furnished
280GDFJP-*5 (7)	390	Eng	123				Furnished	280GDFJP-*5 (7)	390	Eng	123				Furnished
280GDFJP-*8 (7)	390	Eng	116				Furnished	280GDFJP-*8 (7)	390	Eng	116				Furnished
280GGFJP-*5 (7)	360	Eng	147				Furnished	280GGFJP-*5 (7)	360	Eng	147				Furnished
280GGFJP-*8 (7)	360	Eng	137				Furnished	280GGFJP-*8 (7)	360	Eng	137				Furnished
280GKFJP-*5 (7)	340	Eng	164				Furnished	280GKFJP-*5 (7)	340	Eng	164				Furnished
280GMFJP-*5 (7)	318	Eng	184				Furnished	280GMFJP-*5 (7)	318	Eng	184				Furnished
280GMFJP-*8 (7)	318	Eng	170				Furnished	280GMFJP-*8 (7)	318	Eng	170				Furnished
280GPFJP-*5 (7)	290	Eng	205				Furnished	280GPFJP-*5 (7)	290	Eng	205				Furnished
280GPFJP-*8 (7)	290	Eng	189				Furnished	280GPFJP-*8 (7)	290	Eng	189				Furnished
280GSFJP-*5 (7)	265	Eng	229				Furnished	280GSFJP-*5 (7)	265	Eng	229				Furnished
280GSFJP-*8 (7)	265	Eng	210				Furnished	280GSFJP-*8 (7)	265	Eng	210				Furnished
870XAFJP-*5 (6)	591	Eng	116				Furnished	870XAFJP-*3 (6)	591	Eng	116				Furnished
870XBFJP-*5 (6)	552	Eng	124				Furnished	870XBFJP-*3 (6)	552	Eng	124				Furnished
870XCFJP-*5 (6)	515	Eng	133				Furnished	870XCFJP-*3 (6)	515	Eng	133				Furnished
870XDFJP-*5 (6)	482	Eng	142				Furnished	870XDFJP-*3 (6)	482	Eng	142				Furnished
870XEFJP-*5 (6)	425	Eng	161				Furnished	870XEFJP-*3 (6)	425	Eng	161				Furnished
870XFFJP-*5 (6)	376	Eng	182				Furnished	870XFFJP-*3 (6)	376	Eng	182				Furnished
870XGFJP-*5 (6)	332	Eng	207				Furnished	870XGFJP-*3 (6)	332	Eng	207				Furnished
870XHFJP-*5 (6)	312	Eng	220				Furnished	870XHFJP-*3 (6)	312	Eng	220				Furnished
870XJFJP-*5 (6)	293	Eng	234				Furnished	870XJFJP-*3 (6)	293	Eng	234				Furnished
ONE SPEED - POWERSHIFT (HYDRAULIC) EXTENDED SHAFT															
890JAFJW-*3 (6)	591	Eng	116				Furnished	890KAFJW-*5 (6)	591	Eng	116				Furnished
890JBFJW-*3 (6)	552	Eng	124				Furnished	890KBFJW-*5 (6)	552	Eng	124				Furnished

Continued Next Page

CAUTION: Chelsea Recommends the Power Take-Off (PTO) installation on the 3000/4000 Series Transmissions to utilize a Vehicle Interface Module, or Chassis Manufacturers' equivalent controller to incorporate all the PTO control features available, this includes the "PTO Request" and "PTO Enable Output" feature. The "PTO Enable" circuit signals the Transmission Control Module (TCM) to maintain line pressure to the PTO Failure to provide this signal may not be sufficient to the PTO This may cause damage to the PTO and /or Transmission. Please see the Allison Transmission website and individual chassis manufacturer for installation details.

CAUTION: The Torque Rating on Certain Ratios is Restricted by Allison Transmission to a Torque Limit of 685 Ft.lbs on their PTO Drive Gear.

NOTE: The Right Side opening is located at approximately 1 o'clock when veiwed from the rear. All PTOs mounted in this location require pressure lubrication.

NOTE: All models require a hose assembly. For the 267 Series, use 329130-1X for left side, 329130-6X for top right and 329130-4X for right side. THESE HOSE ASSEMBLIES MUST BE ORDERED SEPARATELY. For 280, 870/877 and 890/897 Series - All Mounting Hardware and Hose Assemblies are Included with the Unit.

NOTE: 280, 890 and 870 Family of PTOs stated Torque is for Intermittent and Continuous Duty Applications.

NOTE: 890 Family - The Combined Weight of Pump, Fittings and Hoses Should Not Exceed 120 Lbs. Refer to Owner's Manual (HY25-1890-M1/US) for Complete Details.

NOTE: The 267 Series is not available in the 3 arrangement with an "XK" output due to interference with the pressure lube fitting.

NOTE: Do not use Adapter Gear Assemblies on Allison 3000/4000 Series Automatic Transmissions.

(6) Input Gear Part No. 5-P-1428
(7) Input Gear Part No. 5-P-1491

Parker Hannifin Corporation
Chelsea Products Division
Olive Branch, MS 38654 USA

4000 (4000 Family w/ Retarder)

LEFT SIDE ONLY

TRANSMISSION GEAR DATA:
L.S. 10-BOLT Opening Gear FORWARD of Centerline
97 Teeth - L.H. HELIX

PITCH LINE TO APERTURE FACE:
1.7799" (45.2100MM)

TOP SIDE ONLY

TRANSMISSION GEAR DATA:
TOP 10-BOLT Opening Gear FORWARD of Centerline
97 Teeth - L.H. HELIX

PITCH LINE TO APERTURE FACE:
1.7799" (45.2100MM)

Caution: Application Approval Required for PTO Output Shaft Speeds Above 2500 RPM

LEFT Side PTO Model	Inter. Torq.	Dir. Rot.	Engine %		Filler Block	Adapter Assy.	Stud Kit	TOP Side PTO Model	Inter. Torq.	Dir. Rot.	Engine %		Filler Block	Adapter Assy.	Stud Kit
			Fwd.	Rev.							Fwd.	Rev.			
ONE SPEED - POWERSHIFT (HYDRAULIC) EXTENDED SHAFT															
890JCFJW-*3 (6)	515	Eng	133				Furnished	890KCFJW-*5 (6)	515	Eng	133				Furnished
890JDFJW-*3 (6)	482	Eng	142				Furnished	890KDFJW-*5 (6)	482	Eng	142				Furnished
890JEFJW-*3 (6)	425	Eng	161				Furnished	890KEFJW-*5 (6)	425	Eng	161				Furnished
890JFFJW-*3 (6)	376	Eng	182				Furnished	890KFFJW-*5 (6)	376	Eng	182				Furnished
890PAFJW-*5 (6)	591	Eng	116				Furnished								
890PBFJW-*5 (6)	552	Eng	124				Furnished								
890PCFJW-*5 (6)	515	Eng	133				Furnished								
890PDFJW-*5 (6)	482	Eng	142				Furnished								
890PEFJW-*5 (6)	425	Eng	161				Furnished								
890PFFJW-*5 (6)	376	Eng	182				Furnished								
ONE SPEED - CONSTANT MESH EXTENDED SHAFT															
897JAFJW-*3 (6)	591	Eng	116				Furnished	897KAFJW-*5 (6)	591	Eng	116				Furnished
897JBFJW-*3 (6)	552	Eng	127				Furnished	897KBFJW-*5 (6)	552	Eng	124				Furnished
897JCFJW-*3 (6)	515	Eng	133				Furnished	897KCFJW-*5 (6)	515	Eng	133				Furnished
897JDFJW-*3 (6)	482	Eng	142				Furnished	897KDFJW-*5 (6)	482	Eng	142				Furnished
897JEFJW-*3 (6)	425	Eng	161				Furnished	897KEFJW-*5 (6)	425	Eng	161				Furnished
897JFFJW-*3 (6)	376	Eng	182				Furnished	897KFFJW-*5 (6)	376	Eng	182				Furnished
897PAFJW-*5 (6)	591	Eng	116				Furnished								
897PBFJW-*5 (6)	552	Eng	127				Furnished								
897PCFJW-*5 (6)	515	Eng	133				Furnished								
897PDFJW-*5 (6)	482	Eng	142				Furnished								
897PEFJW-*5 (6)	425	Eng	161				Furnished								
897PFFJW-*5 (6)	376	Eng	182				Furnished								

CAUTION: Chelsea Recommends the Power Take-Off (PTO) installation on the 3000/4000 Series Transmissions to utilize a Vehicle Interface Module, or Chassis Manufacturers' equivalent controller to incorporate all the PTO control features available, this includes the "PTO Request" and "PTO Enable Output" feature. The "PTO Enable" circuit signals the Transmission Control Module (TCM) to maintain line pressure to the PTO Failure to provide this signal may not be sufficient to the PTO This may cause damage to the PTO and /or Transmission. Please see the Allison Transmission website and individual chassis manufacturer for installation details.

CAUTION: The Torque Rating on Certain Ratios is Restricted by Allison Transmission to a Torque Limit of 685 Ft.lbs on their PTO Drive Gear.

NOTE: The Right Side opening is located at approximately 1 o'clock when veiwed from the rear. All PTOs mounted in this location require pressure lubrication.

NOTE: All models require a hose assembly. For the 267 Series, use 329130-1X for left side, 329130-6X for top right and 329130-4X for right side. THESE HOSE ASSEMBLIES MUST BE ORDERED SEPARATELY. For 280, 870/877 and 890/897 Series - All Mounting Hardware and Hose Assemblies are Included with the Unit.

NOTE: 280, 890 and 870 Family of PTOs stated Torque is for Intermittent and Continuous Duty Applications.

NOTE: 890 Family - The Combined Weight of Pump, Fittings and Hoses Should Not Exceed 120 Lbs. Refer to Owner's Manual (HY25-1890-M1/US) for Complete Details.

NOTE: The 267 Series is not available in the 3 arrangement with an "XK" output due to interference with the pressure lube fitting.

NOTE: Do not use Adapter Gear Assemblies on Allison 3000/4000 Series Automatic Transmissions.

(6) Input Gear Part No. 5-P-1428

Allison

Parker Hannifin Corporation
Chelsea Products Division
Olive Branch, MS 38654 USA

1000	1350 SP (Available in 4,5 & 6 Speed)	2300 RDS
1000 EVS	2000	2400
1000 MH	2100 EVS	2500 EVS
1000 RDS	2100 MH	2500 MH
1350 (Available in 4,5 & 6 Speed)	2100 RDS	2500 RDS
1350 EVS (Available in 4,5 & 6 Speed)	2200 EVS	
1350 MH (Available in 4,5 & 6 Speed)	2200 MH	
1350 RDS (Available in 4,5 & 6 Speed)	2200 RDS	

LEFT SIDE ONLY

TRANSMISSION GEAR DATA:
L.S. 06-BOLT Opening Gear FORWARD of Centerline
64 Teeth - SPUR

PITCH LINE TO APERTURE FACE:
1.0080" (25.6000MM)

RIGHT SIDE ONLY

TRANSMISSION GEAR DATA:
R.S. 06-BOLT Opening Gear FORWARD of Centerline
64 Teeth - SPUR

PITCH LINE TO APERTURE FACE:
1.0080" (25.6032MM)

Caution: Application Approval Required for PTO Output Shaft Speeds Above 2500 RPM

LEFT Side PTO Model	Inter. Torq.	Dir. Rot.	Engine % Fwd.	Engine % Rev.	Filler Block	Adapter Assy.	Stud Kit	RIGHT Side PTO Model	Inter. Torq.	Dir. Rot.	Engine % Fwd.	Engine % Rev.	Filler Block	Adapter Assy.	Stud Kit
ONE SPEED - TWO GEAR - MECHANICAL SHIFT															
442GBHVP-*5 (6)	215	Eng	96				Furnished	442GBHVP-*3 (6)	215	Eng	96				Furnished
442GBHVX-*5 (6)	150	Eng	96				Furnished	442GBHVX-*3 (6)	150	Eng	96				Furnished
442GFHVP-*5 (5)	165	Eng	151				Furnished	442GFHVP-*3 (5)	165	Eng	151				Furnished
ONE SPEED - TWO GEAR POWERSHIFT (AIR OR HYDRAULIC)															
272GAHVP-*5	294	Eng	85				Furnished	272GAHVP-*3	294	Eng	85				Furnished
272GBHVP-*5	240	Eng	104				Furnished	272GBHVP-*3	240	Eng	104				Furnished
272GCHVP-*5	198	Eng	126				Furnished	272GCHVP-*3	198	Eng	126				Furnished
272GDHVP-*5	176	Eng	142				Furnished	272GDHVP-*3	176	Eng	142				Furnished
ONE SPEED - TWO GEAR - POWERSHIFT (AIR)															
230GAHVP-*5 (2)	310	Eng	81				Furnished	230GAHVP-*3 (2)	310	Eng	81				Furnished
230GBHVP-*5 (3)	239	Eng	105				Furnished	230GBHVP-*3 (3)	239	Eng	105				Furnished
230GDHVP-*5 (4)	206	Eng	121				Furnished	230GDHVP-*3 (4)	206	Eng	121				Furnished
231GAHVP-*3 (2)	250	Eng	81				Furnished	231GAHVP-*5 (2)	250	Eng	81				Furnished
231GBHVP-*3 (3)	239	Eng	105				Furnished	231GBHVP-*5 (3)	239	Eng	105				Furnished
231GDHVP-*3 (4)	206	Eng	121				Furnished	231GDHVP-*5 (4)	206	Eng	121				Furnished
ONE SPEED - TWO GEAR - POWERSHIFT (HYDRAULIC)															
252GDHVP-*5 (1)	120	Eng	122				Furnished	252GDHVX-*5 (1)	120	Eng	122				Furnished
252GMHVP-*5 (7)	50	Eng	178				Furnished	252GMHVX-*5 (7)	50	Eng	178				Furnished
270GAHVP-*5 (2)	310	Eng	81				Furnished	270GAHVP-*3 (2)	310	Eng	81				Furnished
270GBHVP-*5 (3)	239	Eng	105				Furnished	270GBHVP-*3 (3)	239	Eng	105				Furnished
270GDHVP-*5 (4)	206	Eng	121				Furnished	270GDHVP-*3 (4)	206	Eng	121				Furnished
270GKHVP-*5 (8)	152	Eng	163				Furnished	270GKHVP-*3 (8)	152	Eng	163				Furnished
271GAHVP-*3 (2)	250	Eng	81				Furnished	271GAHVP-*5 (2)	250	Eng	81				Furnished
271GBHVP-*3 (3)	239	Eng	105				Furnished	271GBHVP-*5 (3)	239	Eng	105				Furnished
271GDHVP-*3 (4)	206	Eng	121				Furnished	271GDHVP-*5 (4)	206	Eng	121				Furnished
271GKHVP-*3 (8)	152	Eng	163				Furnished	271GKHVP-*5 (8)	152	Eng	163				Furnished
GEARED ADAPTERS															
626GHVX-4HV (5)	250	Opp	0		7-A-140(P)(9)		Furnished	626GHVX-3HV (5)	250	Opp	0		7-A-140(P)(9)		Furnished

Continued Next Page

CAUTION: Chelsea requires PTO installation on the 1000/2000 series transmission to utilize Vehicle Interface Module, or Chassis Manufacturer's equivalent controller to incorporate all the PTO control features available, this includes the "PTO Request" and "PTO Enable Output" feature. The "PTO Enable" circuit signals the Transmission Control Module(TCM) to maintain line pressure to the PTO Failure to provide this signal will activate the Variable Modulated Main Pressure and line pressure may not be sufficient to the PTO This may cause damage to the PTO and /or Transmission. Please see the Allison Transmission website and individual chassis manufacturer for installation details.

CAUTION: The PTO torque ratings shown are based on the maximum allowable torque of 250lb/ft at the 64 tooth gear in the transmission with the PTO on one opening only. With PTOs mounted on both openings the maximum allowable torque at the 64 tooth gear in the transmission is 200 lb/ft. The 270/271/230/231 Series torque ratings will be as follows, "A" ratio = 247 lb/ft., "B" ratio = 190 lb/ft., "D" ratio = 165 lbs/ft. With the 442 Series w/Pressure Lube on both sides, PTO torque ratings will be as follows, "B" ratio = 208 lb/ft., "F" ratio = 135 lb/ft. For a more precise evaluation of your PTO application refer to the Allison Body Builders Book, Section F, PTO Systems Provisions.

CAUTION: If installing a PTO with the EOC, speed sensor 379917 must be used. Standard speed sensor, part number 379243, may cause incorrect speed readings to the EOC control box.

NOTE: There is torque converter lock up feature available with the 1000/2000/2400 series transmissions. The torque converter lock up feature comes on and is controlled by the Transmission Control Module (TCM) when a signal is provided to the "PTO Enable" circuit of the TCM by the PTO switch. Lock up will only come on in the "NEUTRAL" and "PARK" positions at 1100 RPM transmission turbine speed. This equates to 1200-1250 RPM or higher engine speed, depending on PTO load. The lock up clutch does not come on automatically in "DRIVE" at 1100 RPM. Refer to the appropriate owner's manual for wiring installation.

NOTE: If the 442 Series is ordered with Pressure Lube, Hose 328075X is supplied with the PTO A Restrictor Orifice, 379896 (442*FHVP) or 379594 (442*BHVP) is required and is shipped with the PTO

NOTE: 442*B Ratio - DO NOT USE with Geared Adapter.

NOTE: The 626/630 & 645 geared adapters listed on this application page are for the 442*F Ratio Only. A 442ZFHV with 7-A-140 filler block and 7170-1X stud kit must be used when mounting the PTO to one of the adapters.

NOTE: A lube "T" fitting is required in the oil return cooling line to supply low pressure oil to the idler shaft of the 230, 231, 252(left side), 270, 271, or 442 Series PTO. The 378840 "T" fitting is for transmission model 1000 with the SAE #3 bell housing, 378970 "T" fitting is for the transmission model 1000/2000/2400 with the SAE #2 bell housing, or the low pressure return line may be cut with a tube cutter and a compression "T" fitting may be installed.

NOTE: Pre-2005; To connect the Chelsea PTO switch to the "PTO Enable" circuit of the TCM, a wiring kit must be ordered depending on the type of shifter being used. For Shifter without EOC order 329336-1X, for Shifter with EOC order 329336-2X and for Shifter with Pilot Valve order 329336-3X. These kits will include wire and installation instructions. ORDER SEPARATELY

NOTE: 272 Series stated torque values on this page are for Intermittent and Continuous Duty Applications.

(1) Input Gear Part No. 5-P-1294
(2) Input Gear Part No. 5-P-1295
(3) Input Gear Part No. 5-P-1296
(4) Input Gear Part No. 5-P-1297
(5) Input Gear Part No. 5-P-1300
(6) Input Gear Part No. 5-P-1358
(7) Input Gear Part No. 5-P-1386
(8) Input Gear Part No. 5-P-1417
(9) Filler block furnished with P.T.O.

Parker Hannifin Corporation
Chelsea Products Division
Olive Branch, MS 38654 USA

1000	1350 SP (Available in 4,5 & 6 Speed)	2300 RDS
1000 EVS	2000	2400
1000 MH	2100 EVS	2500 EVS
1000 RDS	2100 MH	2500 MH
1350 (Available in 4,5 & 6 Speed)	2100 RDS	2500 RDS
1350 EVS (Available in 4,5 & 6 Speed)	2200 EVS	
1350 MH (Available in 4,5 & 6 Speed)	2200 MH	
1350 RDS (Available in 4,5 & 6 Speed)	2200 RDS	

LEFT SIDE ONLY

TRANSMISSION GEAR DATA:
L.S. 06-BOLT Opening Gear FORWARD of Centerline
64 Teeth - SPUR

PITCH LINE TO APERTURE FACE:
1.0080" (25.6000MM)

RIGHT SIDE ONLY

TRANSMISSION GEAR DATA:
R.S. 06-BOLT Opening Gear FORWARD of Centerline
64 Teeth - SPUR

PITCH LINE TO APERTURE FACE:
1.0080" (25.6032MM)

Caution: Application Approval Required for PTO Output Shaft Speeds Above 2500 RPM

GEARED ADAPTERS

LEFT Side PTO Model	Inter. Torq.	Dir. Rot.	Engine % Fwd.	Engine % Rev.	Filler Block	Adapter Assy.	Stud Kit	RIGHT Side PTO Model	Inter. Torq.	Dir. Rot.	Engine % Fwd.	Engine % Rev.	Filler Block	Adapter Assy.	Stud Kit
630GHVX-4HV (5)	250	Opp	0		7-A-140(P)(9)		Furnished	630GHVX-3HV (5)	250	Opp	0		7-A-140(P)(9)		Furnished
645GHVX-4HV (5)	250	Opp	0		7-A-140(P)(9)		Furnished	645GHVX-3HV (5)	250	Opp	0		7-A-140(P)(9)		Furnished

CAUTION: Chelsea requires PTO installation on the 1000/2000 series transmission to utilize Vehicle Interface Module, or Chassis Manufacturer's equivalent controller to incorporate all the PTO control features available, this includes the "PTO Request" and "PTO Enable Output" feature. The "PTO Enable" circuit signals the Transmission Control Module(TCM) to maintain line pressure to the PTO Failure to provide this signal will activate the Variable Modulated Main Pressure and line pressure may not be sufficient to the PTO This may cause damage to the PTO and /or Transmission. Please see the Allison Transmission website and individual chassis manufacturer for installation details.

CAUTION: The PTO torque ratings shown are based on the maximum allowable torque of 250lb/ft at the 64 tooth gear in the transmission with the PTO on one opening only. With PTOs mounted on both openings the maximum allowable torque at the 64 tooth gear in the transmission is 200 lb/ft. The 270/271/230/231 Series torque ratings will be as follows, "A" ratio = 247 lb/ft., "B" ratio = 190 lb/ft., "D" ratio = 165 lbs/ft. With the 442 Series w/Pressure Lube on both sides, PTO torque ratings will be as follows, "B" ratio = 208 lb/ft., "F" ratio = 135 lb/ft. For a more precise evaluation of your PTO application refer to the Allison Body Builders Book, Section F, PTO Systems Provisions.

CAUTION: If installing a PTO with the EOC, speed sensor 379917 must be used. Standard speed sensor, part number 379243, may cause incorrect speed readings to the EOC control box.

NOTE: There is torque converter lock up feature available with the 1000/2000/2400 series transmissions. The torque converter lock up feature comes on and is controlled by the Transmission Control Module (TCM) when a signal is provided to the "PTO Enable" circuit of the TCM by the PTO switch. Lock up will only come on in the "NEUTRAL" and "PARK" positions at 1100 RPM transmission turbine speed. This equates to 1200-1250 RPM or higher engine speed, depending on PTO load. The lock up clutch does not come on automatically in "DRIVE" at 1100 RPM. Refer to the appropriate owner's manual for wiring installation.

NOTE: If the 442 Series is ordered with Pressure Lube, Hose 328075X is supplied with the PTO A Restrictor Orifice, 379896 (442*FHVP) or 379594 (442*BHVP) is required and is shipped with the PTO

NOTE: 442*B Ratio - DO NOT USE with Geared Adapter.

NOTE: The 626/630 & 645 geared adapters listed on this application page are for the 442*F Ratio Only. A 442ZFHV with 7-A-140 filler block and 7170-1X stud kit must be used when mounting the PTO to one of the adapters.

NOTE: A lube "T" fitting is required in the oil return cooling line to supply low pressure oil to the idler shaft of the 230, 231, 252(left side), 270, 271, or 442 Series PTO. The 378840 "T" fitting is for transmission model 1000 with the SAE #3 bell housing, 378970 "T" fitting is for the transmission model 1000/2000/2400 with the SAE #2 bell housing, or the low pressure return line may be cut with a tube cutter and a compression "T" fitting may be installed.

NOTE: Pre-2005; To connect the Chelsea PTO switch to the "PTO Enable" circuit of the TCM, a wiring kit must be ordered depending on the type of shifter being used. For Shifter without EOC order 329336-1X, for Shifter with EOC order 329336-2X and for Shifter with Pilot Valve order 329336-3X. These kits will include wire and installation instructions. ORDER SEPARATELY

NOTE: 272 Series stated torque values on this page are for Intermittent and Continuous Duty Applications.

(5) Input Gear Part No. 5-P-1300
(9) Filler block furnished with P.T.O.

Allison

Parker Hannifin Corporation
Chelsea Products Division
Olive Branch, MS 38654 USA

MD-3066P (Europe Only)
3000 RDS (Side/Top PTO Provision)
3500 RDS (Side/Top PTO Provision)
3500 ORS (Side/Top PTO Provision)
3200 ORS (Side/Top PTO Provision)
3000 ORS (Side/Top PTO Provision)
3000 SP (Side/Top PTO Provision)
3200 SP (Side/Top PTO Provision)
3500 SP (Side/Top PTO Provision)
3000 (International - Side/Top PTO Provision)
3200 (International - Side/Top PTO Provision)
3500 (International - Side/Top PTO Provision)

LEFT SIDE ONLY

TRANSMISSION GEAR DATA:
L.S. 10-BOLT Opening Gear FORWARD of Centerline
83 Teeth - L.H. HELIX

PITCH LINE TO APERTURE FACE:
1.7800" (45.2100MM)

TOP SIDE ONLY

TRANSMISSION GEAR DATA:
TOP 10-BOLT Opening Gear FORWARD of Centerline
83 Teeth - L.H. HELIX

PITCH LINE TO APERTURE FACE:
1.7800" (45.2100MM)

Caution: Application Approval Required for PTO Output Shaft Speeds Above 2500 RPM

ONE SPEED - TWO GEAR - CONSTANT MESH

LEFT Side PTO Model	Inter. Torq.	Dir. Rot.	Engine % Fwd.	Engine % Rev.	Filler Block	Adapter Assy.	Stud Kit	TOP Side PTO Model	Inter. Torq.	Dir. Rot.	Engine % Fwd.	Engine % Rev.	Filler Block	Adapter Assy.	Stud Kit
267SBFJP-*5 (5)	402	Eng	88				Furnished	267SBFJP-*3 (5)	402	Eng	88				Furnished
267SDFJP-*5 (4)	390	Eng	106				Furnished	267SDFJP-*3 (4)	390	Eng	106				Furnished
267SGFJP-*5 (2)	360	Eng	126				Furnished	267SGFJP-*3 (2)	360	Eng	126				Furnished
267SMFJP-*5 (6)	309	Eng	157				Furnished	267SMFJP-*3 (6)	309	Eng	157				Furnished
267SSFJP-*5 (1)	247	Eng	196				Furnished	267SSFJP-*3 (1)	247	Eng	196				Furnished
267XBFJP-*5 (9)	335	Eng	88				Furnished	267XBFJP-*3 (9)	335	Eng	88				Furnished
267XDFJP-*5 (10)	325	Eng	106				Furnished	267XDFJP-*3 (10)	325	Eng	106				Furnished
267XGFJP-*5 (11)	300	Eng	126				Furnished	267XGFJP-*3 (11)	300	Eng	126				Furnished
267XMFJP-*5 (12)	265	Eng	157				Furnished	267XMFJP-*3 (12)	265	Eng	157				Furnished
267XSFJP-*5 (1)	247	Eng	196				Furnished	267XSFJP-*3 (1)	247	Eng	196				Furnished
287GBFJP-*5 (8)	300	Eng	73				Furnished	287GBFJP-*3 (8)	300	Eng	73				Furnished
287GBFJP-*8 (8)	300	Eng	69				Furnished	287GBFJP-*8 (8)	300	Eng	69				Furnished
287GCFJP-*5 (8)	390	Eng	88				Furnished	287GCFJP-*3 (8)	390	Eng	88				Furnished
287GCFJP-*8 (8)	390	Eng	83				Furnished	287GCFJP-*8 (8)	390	Eng	83				Furnished
287GDFJP-*5 (8)	390	Eng	87				Furnished	287GDFJP-*3 (8)	390	Eng	87				Furnished
287GDFJP-*8 (8)	390	Eng	99				Furnished	287GDFJP-*8 (8)	390	Eng	99				Furnished
287GGFJP-*5 (8)	360	Eng	126				Furnished	287GGFJP-*3 (8)	360	Eng	126				Furnished
287GGFJP-*8 (8)	360	Eng	117				Furnished	287GGFJP-*8 (8)	360	Eng	117				Furnished
287GKFJP-*5 (8)	340	Eng	140				Furnished	287GKFJP-*3 (8)	340	Eng	140				Furnished
287GMFJP-*5 (8)	309	Eng	157				Furnished	287GMFJP-*3 (8)	309	Eng	157				Furnished
287GMFJP-*8 (8)	318	Eng	145				Furnished	287GMFJP-*8 (8)	318	Eng	145				Furnished
287GPFJP-*5 (8)	275	Eng	175				Furnished	287GPFJP-*3 (8)	275	Eng	175				Furnished
287GPFJP-*8 (8)	290	Eng	162				Furnished	287GPFJP-*8 (8)	290	Eng	162				Furnished
287GSFJP-*5 (8)	247	Eng	196				Furnished	287GSFJP-*3 (8)	247	Eng	196				Furnished
287GSFJP-*8 (8)	265	Eng	180				Furnished	287GSFJP-*8 (8)	265	Eng	180				Furnished
287GTFJP-*8 (8)	230	Eng	211				Furnished	287GTFJP-*8 (8)	230	Eng	211				Furnished
877XAFJP-*5 (7)	485	Eng	100				Furnished	877XAFJP-*3 (7)	485	Eng	100				Furnished
877XBFJP-*5 (7)	458	Eng	106				Furnished	877XBFJP-*3 (7)	458	Eng	106				Furnished
877XCFJP-*5 (7)	425	Eng	114				Furnished	877XCFJP-*3 (7)	425	Eng	114				Furnished
877XDFJP-*5 (7)	401	Eng	121				Furnished	877XDFJP-*3 (7)	401	Eng	121				Furnished
877XEFJP-*5 (7)	351	Eng	138				Furnished	877XEFJP-*3 (7)	351	Eng	138				Furnished
877XFFJP-*5 (7)	311	Eng	156				Furnished	877XFFJP-*3 (7)	311	Eng	156				Furnished

Continued Next Page

CAUTION: Chelsea Recommends the Power Take-Off (PTO) installation on the 3000/4000 Series Transmissions to utilize a Vehicle Interface Module, or Chassis Manufacturers' equivalent controller to incorporate all the PTO control features available, this includes the "PTO Request" and "PTO Enable Output" feature. The "PTO Enable" circuit signals the Transmission Control Module(TCM) to maintain line pressure to the PTO Failure to provide this signal may not be sufficient to the PTO This may cause damage to the PTO and /or Transmission. Please see the Allison Transmission website and individual chassis manufacturer for installation details.

CAUTION: The Torque Rating on Certain Ratios is Restricted by Allison Transmission to a Torque Limit of 485 Ft.lbs on their PTO Drive Gear.

NOTE: The Allison Model MD-3066 has two 10 bolt aperture openings located at 9 o'clock on the left side and 2 o'clock on the right side (Top Right). Every PTO mounted on this transmission must have the pressure lube option ("P").

NOTE: All models require a hose assembly. For the 267 Series, use 329130-1X for left side, 329130-6X for top right and 329130-4X for right side. THESE HOSE ASSEMBLIES MUST BE ORDERED SEPARATELY. For 280, 870/877 and 890/897 Series - All Mounting Hardware and Hose Assemblies are Included with the Unit.

NOTE: The 267 Series is not available in the 3 arrangement with an "XK" output due to interference with the pressure lube fitting.

NOTE: Do not use Geared Adapters Assemblies on Allison 3000/4000 Series Automatic Transmissions.

NOTE: 280, 890 and 870 Family of PTOs stated Torque is for Intermittent and Continuous Duty Applications.

NOTE: 890 SERIES - The combined weight of pump, fittings, and hoses should not exceed 120 Lbs. without required support brackets. Refer to Owner's Manual (HY25-1890-M1/US) for complete details.

(1) Input Gear Part No. 5-P-1173
(2) Input Gear Part No. 5-P-1225
(4) Input Gear Part No. 5-P-1293
(5) Input Gear Part No. 5-P-1350
(6) Input Gear Part No. 5-P-1351
(7) Input Gear Part No. 5-P-1428
(8) Input Gear Part No. 5-P-1491
(9) Input Gear Part No. 5-P-912
(10) Input Gear Part No. 5-P-913
(11) Input Gear Part No. 5-P-914
(12) Input Gear Part No. 5-P-915

Parker Hannifin Corporation
Chelsea Products Division
Olive Branch, MS 38654 USA

MD-3066P (Europe Only)
3000 RDS (Side/Top PTO Provision)
3500 RDS (Side/Top PTO Provision)
3500 ORS (Side/Top PTO Provision)
3200 ORS (Side/Top PTO Provision)
3000 ORS (Side/Top PTO Provision)
3000 SP (Side/Top PTO Provision)
3200 SP (Side/Top PTO Provision)
3500 SP (Side/Top PTO Provision)
3000 (International - Side/Top PTO Provision)
3200 (International - Side/Top PTO Provision)
3500 (International - Side/Top PTO Provision)

LEFT SIDE ONLY

TRANSMISSION GEAR DATA:
L.S. 10-BOLT Opening Gear FORWARD of Centerline
83 Teeth - L.H. HELIX

PITCH LINE TO APERTURE FACE:
1.7800" (45.2100MM)

TOP SIDE ONLY

TRANSMISSION GEAR DATA:
TOP 10-BOLT Opening Gear FORWARD of Centerline
83 Teeth - L.H. HELIX

PITCH LINE TO APERTURE FACE:
1.7800" (45.2100MM)

Caution: Application Approval Required for PTO Output Shaft Speeds Above 2500 RPM

LEFT Side PTO Model	Inter. Torq.	Dir. Rot.	Engine % Fwd.	Engine % Rev.	Filler Block	Adapter Assy.	Stud Kit	TOP Side PTO Model	Inter. Torq.	Dir. Rot.	Engine % Fwd.	Engine % Rev.	Filler Block	Adapter Assy.	Stud Kit
ONE SPEED - TWO GEAR - CONSTANT MESH															
877XGFJP-*5 (7)	274	Eng	177				Furnished	877XGFJP-*3 (7)	274	Eng	177				Furnished
877XHFJP-*5 (7)	258	Eng	188				Furnished	877XHFJP-*3 (7)	258	Eng	188				Furnished
877XJFJP-*5 (7)	242	Eng	200				Furnished	877XJFJP-*3 (7)	242	Eng	200				Furnished
877XKFJP-*5 (7)	292	Eng	166				Furnished	877XKFJP-*3 (7)	292	Eng	166				Furnished
ONE SPEED - TWO GEAR - POWERSHIFT (HYDRAULIC)															
280GBFJP-*5 (8)	300	Eng	73				Furnished	280GBFJP-*3 (8)	300	Eng	73				Furnished
280GBFJP-*8 (8)	300	Eng	69				Furnished	280GBFJP-*8 (8)	300	Eng	69				Furnished
280GCFJP-*5 (8)	390	Eng	88				Furnished	280GCFJP-*3 (8)	390	Eng	88				Furnished
280GCFJP-*8 (8)	390	Eng	83				Furnished	280GCFJP-*8 (8)	390	Eng	83				Furnished
280GDFJP-*5 (8)	390	Eng	106				Furnished	280GDFJP-*3 (8)	390	Eng	106				Furnished
280GDFJP-*8 (8)	390	Eng	99				Furnished	280GDFJP-*8 (8)	390	Eng	99				Furnished
280GGFJP-*5 (8)	360	Eng	126				Furnished	280GGFJP-*3 (8)	360	Eng	126				Furnished
280GGFJP-*8 (8)	360	Eng	117				Furnished	280GGFJP-*8 (8)	360	Eng	117				Furnished
280GKFJP-*5 (8)	340	Eng	140				Furnished	280GKFJP-*3 (8)	340	Eng	140				Furnished
280GMFJP-*5 (8)	309	Eng	157				Furnished	280GMFJP-*3 (8)	309	Eng	157				Furnished
280GMFJP-*8 (8)	318	Eng	145				Furnished	280GMFJP-*8 (8)	318	Eng	145				Furnished
280GPFJP-*5 (8)	275	Eng	175				Furnished	280GPFJP-*3 (8)	275	Eng	175				Furnished
280GPFJP-*8 (8)	290	Eng	162				Furnished	280GPFJP-*8 (8)	290	Eng	162				Furnished
280GSFJP-*5 (8)	247	Eng	196				Furnished	280GSFJP-*3 (8)	247	Eng	196				Furnished
280GSFJP-*8 (8)	265	Eng	180				Furnished	280GSFJP-*8 (8)	265	Eng	180				Furnished
280GTFJP-*8 (8)	230	Eng	211				Furnished	280GTFJP-*8 (8)	230	Eng	211				Furnished
870XAFJP-*5 (7)	485	Eng	100				Furnished	870XAFJP-*3 (7)	485	Eng	100				Furnished
870XBFJP-*5 (7)	458	Eng	106				Furnished	870XBFJP-*3 (7)	458	Eng	106				Furnished
870XCFJP-*5 (7)	425	Eng	114				Furnished	870XCFJP-*3 (7)	425	Eng	114				Furnished
870XDFJP-*5 (7)	401	Eng	121				Furnished	870XDFJP-*3 (7)	401	Eng	121				Furnished
870XEFJP-*5 (7)	351	Eng	138				Furnished	870XEFJP-*3 (7)	351	Eng	138				Furnished
870XFFJP-*5 (7)	311	Eng	156				Furnished	870XFFJP-*3 (7)	311	Eng	156				Furnished
870XGFJP-*5 (7)	274	Eng	177				Furnished	870XGFJP-*3 (7)	274	Eng	177				Furnished
870XHFJP-*5 (7)	258	Eng	188				Furnished	870XHFJP-*3 (7)	258	Eng	188				Furnished
870XJFJP-*5 (7)	242	Eng	200				Furnished	870XJFJP-*3 (7)	242	Eng	200				Furnished

Continued Next Page

CAUTION: Chelsea Recommends the Power Take-Off (PTO) installation on the 3000/4000 Series Transmissions to utilize a Vehicle Interface Module, or Chassis Manufacturers' equivalent controller to incorporate all the PTO control features available, this includes the "PTO Request" and "PTO Enable Output" feature. The "PTO Enable" circuit signals the Transmission Control Module(TCM) to maintain line pressure to the PTO Failure to provide this signal may not be sufficient to the PTO This may cause damage to the PTO and /or Transmission. Please see the Allison Transmission website and individual chassis manufacturer for installation details.

CAUTION: The Torque Rating on Certain Ratios is Restricted by Allison Transmission to a Torque Limit of 485 Ft.lbs on their PTO Drive Gear.

NOTE: The Allison Model MD-3066 has two 10 bolt aperture openings located at 9 o'clock on the left side and 2 o'clock on the right side (Top Right). Every PTO mounted on this transmission must have the pressure lube option ("P").

NOTE: All models require a hose assembly. For the 267 Series, use 329130-1X for left side, 329130-6X for top right and 329130-4X for right side. THESE HOSE ASSEMBLIES MUST BE ORDERED SEPARATELY. For 280, 870/877 and 890/897 Series - All Mounting Hardware and Hose Assemblies are Included with the Unit.

NOTE: The 267 Series is not available in the 3 arrangement with an "XK" output due to interference with the pressure lube fitting.

NOTE: Do not use Geared Adapters Assemblies on Allison 3000/4000 Series Automatic Transmissions.

NOTE: 280, 890 and 870 Family of PTOs stated Torque is for Intermittent and Continuous Duty Applications.

NOTE: 890 SERIES - The combined weight of pump, fittings, and hoses should not exceed 120 Lbs. without required support brackets. Refer to Owner's Manual (HY25-1890-M1/US) for complete details.

(7) Input Gear Part No. 5-P-1428
(8) Input Gear Part No. 5-P-1491

Parker Hannifin Corporation
Chelsea Products Division
Olive Branch, MS 38654 USA

MD-3066P (Europe Only)
3000 RDS (Side/Top PTO Provision)
3500 RDS (Side/Top PTO Provision)
3500 ORS (Side/Top PTO Provision)
3200 ORS (Side/Top PTO Provision)
3000 ORS (Side/Top PTO Provision)
3000 SP (Side/Top PTO Provision)
3200 SP (Side/Top PTO Provision)
3500 SP (Side/Top PTO Provision)
3000 (International - Side/Top PTO Provision)
3200 (International - Side/Top PTO Provision)
3500 (International - Side/Top PTO Provision)

LEFT SIDE ONLY

TRANSMISSION GEAR DATA:
L.S. 10-BOLT Opening Gear FORWARD of Centerline
83 Teeth - L.H. HELIX

PITCH LINE TO APERTURE FACE:
1.7800" (45.2100MM)

TOP SIDE ONLY

TRANSMISSION GEAR DATA:
TOP 10-BOLT Opening Gear FORWARD of Centerline
83 Teeth - L.H. HELIX

PITCH LINE TO APERTURE FACE:
1.7800" (45.2100MM)

Caution: Application Approval Required for PTO Output Shaft Speeds Above 2500 RPM

LEFT Side PTO Model	Inter. Torq.	Dir. Rot.	Engine % Fwd.	Engine % Rev.	Filler Block	Adapter Assy.	Stud Kit	TOP Side PTO Model	Inter. Torq.	Dir. Rot.	Engine % Fwd.	Engine % Rev.	Filler Block	Adapter Assy.	Stud Kit
ONE SPEED - POWERSHIFT (HYDRAULIC) EXTENDED SHAFT															
890EAFJW-*5 (7)	485	Eng	100				Furnished	890TAFJW-*5 (7)	485	Eng	100				Furnished
890EBFJW-*5 (7)	458	Eng	106				Furnished	890TBFJW-*5 (7)	458	Eng	106				Furnished
890ECFJW-*5 (7)	425	Eng	114				Furnished	890TCFJW-*5 (7)	425	Eng	114				Furnished
890EDFJW-*5 (7)	401	Eng	121				Furnished	890TDFJW-*5 (7)	401	Eng	121				Furnished
890EEFJW-*5 (7)	351	Eng	138				Furnished	890TEFJW-*5 (7)	351	Eng	138				Furnished
890EFFJW-*5 (7)	311	Eng	156				Furnished	890TFFJW-*5 (7)	311	Eng	156				Furnished
890EGFJW-*5 (7)	274	Eng	177				Furnished	890TGFJW-*5 (7)	274	Eng	177				Furnished
890EHFJW-*5 (7)	258	Eng	188				Furnished	890THFJW-*5 (7)	258	Eng	188				Furnished
ONE SPEED - CONSTANT MESH EXTENDED SHAFT															
897EAFJW-*5 (7)	485	Eng	100				Furnished	897TAFJW-*5 (7)	485	Eng	100				Furnished
897EBFJW-*5 (7)	458	Eng	106				Furnished	897TBFJW-*5 (7)	458	Eng	106				Furnished
897ECFJW-*5 (7)	425	Eng	114				Furnished	897TCFJW-*5 (7)	425	Eng	114				Furnished
897EDFJW-*5 (7)	401	Eng	121				Furnished	897TDFJW-*5 (7)	401	Eng	121				Furnished
897EEFJW-*5 (7)	351	Eng	138				Furnished	897TEFJW-*5 (7)	351	Eng	138				Furnished
897EFFJW-*5 (7)	311	Eng	156				Furnished	897TFFJW-*5 (7)	311	Eng	156				Furnished
897EGFJW-*5 (3)	274	Eng	177				Furnished	897TGFJW-*5 (7)	274	Eng	177				Furnished
897EHFJW-*5 (7)	258	Eng	188				Furnished	897THFJW-*5 (7)	258	Eng	188				Furnished

CAUTION: Chelsea Recommends the Power Take-Off (PTO) installation on the 3000/4000 Series Transmissions to utilize a Vehicle Interface Module, or Chassis Manufacturers' equivalent controller to incorporate all the PTO control features available, this includes the "PTO Request" and "PTO Enable Output" feature. The "PTO Enable" circuit signals the Transmission Control Module(TCM) to maintain line pressure to the PTO Failure to provide this signal may not be sufficient to the PTO This may cause damage to the PTO and /or Transmission. Please see the Allison Transmission website and individual chassis manufacturer for installation details.

CAUTION: The Torque Rating on Certain Ratios is Restricted by Allison Transmission to a Torque Limit of 485 Ft.lbs on their PTO Drive Gear.

NOTE: The Allison Model MD-3066 has two 10 bolt aperture openings located at 9 o'clock on the left side and 2 o'clock on the right side (Top Right). Every PTO mounted on this transmission must have the pressure lube option ("P").

NOTE: All models require a hose assembly. For the 267 Series, use 329130-1X for left side, 329130-6X for top right and 329130-4X for right side. THESE HOSE ASSEMBLIES MUST BE ORDERED SEPARATELY. For 280, 870/877 and 890/897 Series - All Mounting Hardware and Hose Assemblies are Included with the Unit.

NOTE: The 267 Series is not available in the 3 arrangement with an "XK" output due to interference with the pressure lube fitting.

NOTE: Do not use Geared Adapters Assemblies on Allison 3000/4000 Series Automatic Transmissions.

NOTE: 280, 890 and 870 Family of PTOs stated Torque is for Intermittent and Continuous Duty Applications.

NOTE: 890 SERIES - The combined weight of pump, fittings, and hoses should not exceed 120 Lbs. without required support brackets. Refer to Owner's Manual (HY25-1890-M1/US) for complete details.

(3) Input Gear Part No. 5-P-1248
(7) Input Gear Part No. 5-P-1428

Parker Hannifin Corporation
Chelsea Products Division
Olive Branch, MS 38654 USA

3000 (3000 Family Side/Top PTO Provision w/ Integral Cooler)

LEFT SIDE ONLY

TRANSMISSION GEAR DATA:
L.S. 10-BOLT Opening Gear FORWARD of Centerline
83 Teeth - L.H. HELIX

PITCH LINE TO APERTURE FACE:
1.7800" (45.2100MM)

TOP SIDE ONLY

TRANSMISSION GEAR DATA:
TOP 10-BOLT Opening Gear FORWARD of Centerline
83 Teeth - L.H. HELIX

PITCH LINE TO APERTURE FACE:
1.7800" (45.2100MM)

Caution: Application Approval Required for PTO Output Shaft Speeds Above 2500 RPM

ONE SPEED - TWO GEAR - CONSTANT MESH

LEFT Side PTO Model	Inter. Torq.	Dir. Rot.	Engine % Fwd.	Engine % Rev.	Filler Block	Adapter Assy.	Stud Kit	TOP Side PTO Model	Inter. Torq.	Dir. Rot.	Engine % Fwd.	Engine % Rev.	Filler Block	Adapter Assy.	Stud Kit
267SBFJP-*5 (4)	402	Eng	88				Furnished	267SBFJP-*3 (4)	402	Eng	88				Furnished
267SDFJP-*5 (3)	390	Eng	106				Furnished	267SDFJP-*3 (3)	390	Eng	106				Furnished
267SGFJP-*5 (2)	360	Eng	126				Furnished	267SGFJP-*3 (2)	360	Eng	126				Furnished
267SMFJP-*5 (5)	309	Eng	157				Furnished	267SMFJP-*3 (5)	309	Eng	157				Furnished
267SSFJP-*5 (1)	247	Eng	196				Furnished	267SSFJP-*3 (1)	247	Eng	196				Furnished
267XBFJP-*5 (8)	335	Eng	88				Furnished	267XBFJP-*3 (8)	335	Eng	88				Furnished
267XDFJP-*5 (9)	325	Eng	106				Furnished	267XDFJP-*3 (9)	325	Eng	106				Furnished
267XGFJP-*5 (10)	300	Eng	126				Furnished	267XGFJP-*3 (10)	300	Eng	126				Furnished
267XMFJP-*5 (11)	265	Eng	157				Furnished	267XMFJP-*3 (11)	265	Eng	157				Furnished
267XSFJP-*5 (1)	247	Eng	196				Furnished	267XSFJP-*3 (1)	247	Eng	196				Furnished
287GBFJP-*5 (7)	300	Eng	73				Furnished	287GBFJP-*3 (7)	300	Eng	73				Furnished
287GBFJP-*8 (7)	300	Eng	69				Furnished	287GBFJP-*8 (7)	300	Eng	69				Furnished
287GCFJP-*5 (7)	390	Eng	88				Furnished	287GCFJP-*3 (7)	390	Eng	88				Furnished
287GCFJP-*8 (7)	390	Eng	83				Furnished	287GCFJP-*8 (7)	390	Eng	83				Furnished
287GDFJP-*5 (7)	390	Eng	87				Furnished	287GDFJP-*3 (7)	390	Eng	87				Furnished
287GDFJP-*8 (7)	390	Eng	99				Furnished	287GDFJP-*8 (7)	390	Eng	99				Furnished
287GGFJP-*5 (7)	360	Eng	126				Furnished	287GGFJP-*3 (7)	360	Eng	126				Furnished
287GGFJP-*8 (7)	360	Eng	117				Furnished	287GGFJP-*8 (7)	360	Eng	117				Furnished
287GKFJP-*5 (7)	340	Eng	140				Furnished	287GKFJP-*3 (7)	340	Eng	140				Furnished
287GMFJP-*5 (7)	309	Eng	157				Furnished	287GMFJP-*3 (7)	309	Eng	157				Furnished
287GMFJP-*8 (7)	318	Eng	145				Furnished	287GMFJP-*8 (7)	318	Eng	145				Furnished
287GPFJP-*5 (7)	275	Eng	175				Furnished	287GPFJP-*3 (7)	275	Eng	175				Furnished
287GPFJP-*8 (7)	290	Eng	162				Furnished	287GPFJP-*8 (7)	290	Eng	162				Furnished
287GSFJP-*5 (7)	247	Eng	196				Furnished	287GSFJP-*3 (7)	247	Eng	196				Furnished
287GSFJP-*8 (7)	265	Eng	180				Furnished	287GSFJP-*8 (7)	265	Eng	180				Furnished
287GTFJP-*8 (7)	230	Eng	211				Furnished	287GTFJP-*8 (7)	230	Eng	211				Furnished
877XAFJP-*5 (6)	485	Eng	100				Furnished	877XAFJP-*3 (6)	485	Eng	100				Furnished
877XBFJP-*5 (6)	458	Eng	106				Furnished	877XBFJP-*3 (6)	458	Eng	106				Furnished
877XCFJP-*5 (6)	425	Eng	114				Furnished	877XCFJP-*3 (6)	425	Eng	114				Furnished
877XDFJP-*5 (6)	401	Eng	121				Furnished	877XDFJP-*3 (6)	401	Eng	121				Furnished
877XEFJP-*5 (6)	351	Eng	138				Furnished	877XEFJP-*3 (6)	351	Eng	138				Furnished
877XFFJP-*5 (6)	311	Eng	156				Furnished	877XFFJP-*3 (6)	311	Eng	156				Furnished

Continued Next Page

CAUTION: Chelsea Recommends the Power Take-Off (PTO) installation on the 3000/4000 Series Transmissions to utilize a Vehicle Interface Module, or Chassis Manufacturers' equivalent controller to incorporate all the PTO control features available, this includes the "PTO Request" and "PTO Enable Output" feature. The "PTO Enable" circuit signals the Transmission Control Module(TCM) to maintain line pressure to the PTO Failure to provide this signal may not be sufficient to the PTO This may cause damage to the PTO and /or Transmission. Please see the Allison Transmission website and individual chassis manufacturer for installation details.

CAUTION: The Torque Rating on Certain Ratios is Restricted by Allison Transmission to a Torque Limit of 485 Ft.lbs on their PTO Drive Gear.

NOTE: The Allison Model MD-3066 has two 10 bolt aperture openings located at 9 o'clock on the left side and 2 o'clock on the right side (Top Right). Every PTO mounted on this transmission must have the pressure lube option ("P").

NOTE: All models require a hose assembly. For the 267 Series, use 329130-1X for left side, 329130-6X for top right and 329130-4X for right side. THESE HOSE ASSEMBLIES MUST BE ORDERED SEPARATELY. For 280, 870/877 and 890/897 Series - All Mounting Hardware and Hose Assemblies are Included with the Unit.

NOTE: The 267 Series is not available in the 3 arrangement with an "XK" output due to interference with the pressure lube fitting.

NOTE: Do not use Geared Adapter Assemblies on Allison 3000/4000 Series Automatic Transmissions.

NOTE: 890 SERIES - The combined weight of pump, fittings, and hoses should not exceed 120 Lbs. without required support brackets. Refer to Owner's Manual (HY25-1890-M1/US) for complete details.

NOTE: 280, 890 and 870 Family of PTOs stated Torque is for Intermittent and Continuous Duty Applications.

(1) Input Gear Part No. 5-P-1173
(2) Input Gear Part No. 5-P-1225
(3) Input Gear Part No. 5-P-1293
(4) Input Gear Part No. 5-P-1350
(5) Input Gear Part No. 5-P-1351
(6) Input Gear Part No. 5-P-1428
(7) Input Gear Part No. 5-P-1491
(8) Input Gear Part No. 5-P-912
(9) Input Gear Part No. 5-P-913
(10) Input Gear Part No. 5-P-914
(11) Input Gear Part No. 5-P-915

Parker Hannifin Corporation
Chelsea Products Division
Olive Branch, MS 38654 USA

3000 (3000 Family Side/Top PTO Provision w/ Integral Cooler)

LEFT SIDE ONLY

TRANSMISSION GEAR DATA:
L.S. 10-BOLT Opening Gear FORWARD of Centerline
83 Teeth - L.H. HELIX

PITCH LINE TO APERTURE FACE:
1.7800" (45.2100MM)

TOP SIDE ONLY

TRANSMISSION GEAR DATA:
TOP 10-BOLT Opening Gear FORWARD of Centerline
83 Teeth - L.H. HELIX

PITCH LINE TO APERTURE FACE:
1.7800" (45.2100MM)

Caution: Application Approval Required for PTO Output Shaft Speeds Above 2500 RPM

LEFT Side PTO Model	Inter. Torq.	Dir. Rot.	Engine % Fwd.	Engine % Rev.	Filler Block	Adapter Assy.	Stud Kit	TOP Side PTO Model	Inter. Torq.	Dir. Rot.	Engine % Fwd.	Engine % Rev.	Filler Block	Adapter Assy.	Stud Kit
ONE SPEED - TWO GEAR - CONSTANT MESH															
877XGFJP-*5 (6)	274	Eng	177				Furnished	877XGFJP-*3 (6)	274	Eng	177				Furnished
877XHFJP-*5 (6)	258	Eng	188				Furnished	877XHFJP-*3 (6)	258	Eng	188				Furnished
877XJFJP-*5 (6)	242	Eng	200				Furnished	877XJFJP-*3 (6)	242	Eng	200				Furnished
877XKFJP-*5 (6)	292	Eng	166				Furnished	877XKFJP-*3 (6)	292	Eng	166				Furnished
ONE SPEED - TWO GEAR - POWERSHIFT (HYDRAULIC)															
280GBFJP-*5 (7)	300	Eng	73				Furnished	280GBFJP-*3 (7)	300	Eng	73				Furnished
280GBFJP-*8 (7)	300	Eng	69				Furnished	280GBFJP-*8 (7)	300	Eng	69				Furnished
280GCFJP-*5 (7)	390	Eng	88				Furnished	280GCFJP-*3 (7)	390	Eng	88				Furnished
280GCFJP-*8 (7)	390	Eng	83				Furnished	280GCFJP-*8 (7)	390	Eng	83				Furnished
280GDFJP-*5 (7)	390	Eng	106				Furnished	280GDFJP-*3 (7)	390	Eng	106				Furnished
280GDFJP-*8 (7)	390	Eng	99				Furnished	280GDFJP-*8 (7)	390	Eng	99				Furnished
280GGFJP-*5 (7)	360	Eng	126				Furnished	280GGFJP-*3 (7)	360	Eng	126				Furnished
280GGFJP-*8 (7)	360	Eng	117				Furnished	280GGFJP-*8 (7)	360	Eng	117				Furnished
280GKFJP-*5 (7)	340	Eng	140				Furnished	280GKFJP-*3 (7)	340	Eng	140				Furnished
280GMFJP-*5 (7)	309	Eng	157				Furnished	280GMFJP-*3 (7)	309	Eng	157				Furnished
280GMFJP-*8 (7)	318	Eng	145				Furnished	280GMFJP-*8 (7)	318	Eng	145				Furnished
280GPFJP-*5 (7)	275	Eng	175				Furnished	280GPFJP-*3 (7)	275	Eng	175				Furnished
280GPFJP-*8 (7)	290	Eng	162				Furnished	280GPFJP-*8 (7)	290	Eng	162				Furnished
280GSFJP-*5 (7)	247	Eng	196				Furnished	280GSFJP-*3 (7)	247	Eng	196				Furnished
280GSFJP-*8 (7)	265	Eng	180				Furnished	280GSFJP-*8 (7)	265	Eng	180				Furnished
280GTFJP-*8 (7)	230	Eng	211				Furnished	280GTFJP-*8 (7)	230	Eng	211				Furnished
870XAFJP-*5 (6)	485	Eng	100				Furnished	870XAFJP-*3 (6)	485	Eng	100				Furnished
870XBFJP-*5 (6)	458	Eng	106				Furnished	870XBFJP-*3 (6)	458	Eng	106				Furnished
870XCFJP-*5 (6)	425	Eng	114				Furnished	870XCFJP-*3 (6)	425	Eng	114				Furnished
870XDFJP-*5 (6)	401	Eng	121				Furnished	870XDFJP-*3 (6)	401	Eng	121				Furnished
870XEFJP-*5 (6)	351	Eng	138				Furnished	870XEFJP-*3 (6)	351	Eng	138				Furnished
870XFFJP-*5 (6)	311	Eng	156				Furnished	870XFFJP-*3 (6)	311	Eng	156				Furnished
870XGFJP-*5 (6)	274	Eng	177				Furnished	870XGFJP-*3 (6)	274	Eng	177				Furnished
870XHFJP-*5 (6)	258	Eng	188				Furnished	870XHFJP-*3 (6)	258	Eng	188				Furnished
870XJFJP-*5 (6)	242	Eng	200				Furnished	870XJFJP-*3 (6)	242	Eng	200				Furnished

Continued Next Page

CAUTION: Chelsea Recommends the Power Take-Off (PTO) installation on the 3000/4000 Series Transmissions to utilize a Vehicle Interface Module, or Chassis Manufacturers' equivalent controller to incorporate all the PTO control features available, this includes the "PTO Request" and "PTO Enable Output" feature. The "PTO Enable" circuit signals the Transmission Control Module(TCM) to maintain line pressure to the PTO Failure to provide this signal may not be sufficient to the PTO This may cause damage to the PTO and /or Transmission. Please see the Allison Transmission website and individual chassis manufacturer for installation details.

CAUTION: The Torque Rating on Certain Ratios is Restricted by Allison Transmission to a Torque Limit of 485 Ft.lbs on their PTO Drive Gear.

NOTE: The Allison Model MD-3066 has two 10 bolt aperture openings located at 9 o'clock on the left side and 2 o'clock on the right side (Top Right). Every PTO mounted on this transmission must have the pressure lube option ("P").

NOTE: All models require a hose assembly. For the 267 Series, use 329130-1X for left side, 329130-6X for top right and 329130-4X for right side. THESE HOSE ASSEMBLIES MUST BE ORDERED SEPARATELY. For 280, 870/877 and 890/897 Series - All Mounting Hardware and Hose Assemblies are Included with the Unit.

NOTE: The 267 Series is not available in the 3 arrangement with an "XK" output due to interference with the pressure lube fitting.

NOTE: Do not use Geared Adapter Assemblies on Allison 3000/4000 Series Automatic Transmissions.

NOTE: 890 SERIES - The combined weight of pump, fittings, and hoses should not exceed 120 Lbs. without required support brackets. Refer to Owner's Manual (HY25-1890-M1/US) for complete details.

NOTE: 280, 890 and 870 Family of PTOs stated Torque is for Intermittent and Continuous Duty Applications.

(6) Input Gear Part No. 5-P-1428
(7) Input Gear Part No. 5-P-1491

Parker Hannifin Corporation
Chelsea Products Division
Olive Branch, MS 38654 USA

3000 (3000 Family Side/Top PTO Provision w/ Integral Cooler)

LEFT SIDE ONLY

TRANSMISSION GEAR DATA:
L.S. 10-BOLT Opening Gear FORWARD of Centerline
83 Teeth - L.H. HELIX

PITCH LINE TO APERTURE FACE:
1.7800" (45.2100MM)

TOP SIDE ONLY

TRANSMISSION GEAR DATA:
TOP 10-BOLT Opening Gear FORWARD of Centerline
83 Teeth - L.H. HELIX

PITCH LINE TO APERTURE FACE:
1.7800" (45.2100MM)

Caution: Application Approval Required for PTO Output Shaft Speeds Above 2500 RPM

LEFT Side PTO Model	Inter. Torq.	Dir. Rot.	Engine %		Filler Block	Adapter Assy.	Stud Kit	TOP Side PTO Model	Inter. Torq.	Dir. Rot.	Engine %		Filler Block	Adapter Assy.	Stud Kit
			Fwd.	Rev.							Fwd.	Rev.			
ONE SPEED - POWERSHIFT (HYDRAULIC) EXTENDED SHAFT															
890DAFJW-*3 (6)	485	Eng	100				Furnished	890TAFJW-*5 (6)	485	Eng	100				Furnished
890DBFJW-*3 (6)	458	Eng	106				Furnished	890TBFJW-*5 (6)	458	Eng	106				Furnished
890DCFJW-*3 (6)	425	Eng	114				Furnished	890TCFJW-*5 (6)	425	Eng	114				Furnished
890DDFJW-*3 (6)	401	Eng	121				Furnished	890TDFJW-*5 (6)	401	Eng	121				Furnished
890DEFJW-*3 (6)	351	Eng	138				Furnished	890TEFJW-*5 (6)	351	Eng	138				Furnished
890DFFJW-*3 (6)	311	Eng	156				Furnished	890TFFJW-*5 (6)	311	Eng	156				Furnished
890DGFJW-*3 (6)	274	Eng	177				Furnished	890TGFJW-*5 (6)	274	Eng	177				Furnished
890DHFJW-*3 (6)	258	Eng	188				Furnished	890THFJW-*5 (6)	258	Eng	188				Furnished
ONE SPEED - CONSTANT MESH EXTENDED SHAFT															
897DAFJW-*3 (6)	485	Eng	100				Furnished	897TAFJW-*5 (6)	485	Eng	100				Furnished
897DBFJW-*3 (6)	458	Eng	106				Furnished	897TBFJW-*5 (6)	458	Eng	106				Furnished
897DCFJW-*3 (6)	425	Eng	114				Furnished	897TCFJW-*5 (6)	425	Eng	114				Furnished
897DDFJW-*3 (6)	401	Eng	121				Furnished	897TDFJW-*5 (6)	401	Eng	121				Furnished
897DEFJW-*3 (6)	351	Eng	138				Furnished	897TEFJW-*5 (6)	351	Eng	138				Furnished
897DFFJW-*3 (6)	311	Eng	156				Furnished	897TFFJW-*5 (6)	311	Eng	156				Furnished
897DGFJW-*3 (6)	274	Eng	177				Furnished	897TGFJW-*5 (6)	274	Eng	177				Furnished
897DHFJW-*3 (6)	258	Eng	188				Furnished	897THFJW-*5 (6)	258	Eng	188				Furnished

CAUTION: Chelsea Recommends the Power Take-Off (PTO) installation on the 3000/4000 Series Transmissions to utilize a Vehicle Interface Module, or Chassis Manufacturers' equivalent controller to incorporate all the PTO control features available, this includes the "PTO Request" and "PTO Enable Output" feature. The "PTO Enable" circuit signals the Transmission Control Module(TCM) to maintain line pressure to the PTO Failure to provide this signal may not be sufficient to the PTO This may cause damage to the PTO and /or Transmission. Please see the Allison Transmission website and individual chassis manufacturer for installation details.

CAUTION: The Torque Rating on Certain Ratios is Restricted by Allison Transmission to a Torque Limit of 485 Ft.lbs on their PTO Drive Gear.

NOTE: The Allison Model MD-3066 has two 10 bolt aperture openings located at 9 o'clock on the left side and 2 o'clock on the right side (Top Right). Every PTO mounted on this transmission must have the pressure lube option ("P").

NOTE: All models require a hose assembly. For the 267 Series, use 329130-1X for left side, 329130-6X for top right and 329130-4X for right side. THESE HOSE ASSEMBLIES MUST BE ORDERED SEPARATELY. For 280, 870/877 and 890/897 Series - All Mounting Hardware and Hose Assemblies are Included with the Unit.

NOTE: The 267 Series is not available in the 3 arrangement with an "XK" output due to interference with the pressure lube fitting.

NOTE: Do not use Geared Adapter Assemblies on Allison 3000/4000 Series Automatic Transmissions.

NOTE: 890 SERIES - The combined weight of pump, fittings, and hoses should not exceed 120 Lbs. without required support brackets. Refer to Owner's Manual (HY25-1890-M1/US) for complete details.

NOTE: 280, 890 and 870 Family of PTOs stated Torque is for Intermittent and Continuous Duty Applications.

(6) Input Gear Part No. 5-P-1428

Allison

Parker Hannifin Corporation
Chelsea Products Division
Olive Branch, MS 38654 USA

3000 EVS (Emergency Vehicles Only Top / Side PTO Provisions)
3500 EVS (Emergency Vehicles Only Top / Side PTO Provisions)

LEFT SIDE ONLY

TRANSMISSION GEAR DATA:
L.S. 10-BOLT Opening Gear FORWARD of Centerline
83 Teeth - L.H. HELIX

PITCH LINE TO APERTURE FACE:
1.7800" (45.2100MM)

TOP SIDE ONLY

TRANSMISSION GEAR DATA:
TOP 10-BOLT Opening Gear FORWARD of Centerline
83 Teeth - L.H. HELIX

PITCH LINE TO APERTURE FACE:
1.7800" (45.2100MM)

Caution: Application Approval Required for PTO Output Shaft Speeds Above 2500 RPM

ONE SPEED - TWO GEAR - CONSTANT MESH

LEFT Side PTO Model	Inter. Torq.	Dir. Rot.	Engine % Fwd.	Engine % Rev.	Filler Block	Adapter Assy.	Stud Kit	TOP Side PTO Model	Inter. Torq.	Dir. Rot.	Engine % Fwd.	Engine % Rev.	Filler Block	Adapter Assy.	Stud Kit
267SBFJP-*5 (4)	402	Eng	88				Furnished	267SBFJP-*3 (4)	402	Eng	88				Furnished
267SDFJP-*5 (3)	390	Eng	106				Furnished	267SDFJP-*3 (3)	390	Eng	106				Furnished
267SGFJP-*5 (2)	360	Eng	126				Furnished	267SGFJP-*3 (2)	360	Eng	126				Furnished
267SMFJP-*5 (5)	309	Eng	157				Furnished	267SMFJP-*3 (5)	309	Eng	157				Furnished
267SSFJP-*5 (1)	247	Eng	196				Furnished	267SSFJP-*3 (1)	247	Eng	196				Furnished
267XBFJP-*5 (8)	335	Eng	88				Furnished	267XBFJP-*3 (8)	335	Eng	88				Furnished
267XDFJP-*5 (9)	325	Eng	106				Furnished	267XDFJP-*3 (9)	325	Eng	106				Furnished
267XGFJP-*5 (10)	300	Eng	126				Furnished	267XGFJP-*3 (10)	300	Eng	126				Furnished
267XMFJP-*5 (11)	265	Eng	157				Furnished	267XMFJP-*3 (11)	265	Eng	157				Furnished
267XSFJP-*5 (1)	247	Eng	196				Furnished	267XSFJP-*3 (1)	247	Eng	196				Furnished
287GBFJP-*5 (7)	300	Eng	73				Furnished	287GBFJP-*3 (7)	300	Eng	73				Furnished
287GBFJP-*8 (7)	300	Eng	69				Furnished	287GBFJP-*8 (7)	300	Eng	69				Furnished
287GCFJP-*5 (7)	390	Eng	88				Furnished	287GCFJP-*3 (7)	390	Eng	88				Furnished
287GCFJP-*8 (7)	390	Eng	83				Furnished	287GCFJP-*8 (7)	390	Eng	83				Furnished
287GDFJP-*5 (7)	390	Eng	87				Furnished	287GDFJP-*3 (7)	390	Eng	87				Furnished
287GDFJP-*8 (7)	390	Eng	99				Furnished	287GDFJP-*8 (7)	390	Eng	99				Furnished
287GGFJP-*5 (7)	360	Eng	126				Furnished	287GGFJP-*3 (7)	360	Eng	126				Furnished
287GGFJP-*8 (7)	360	Eng	117				Furnished	287GGFJP-*8 (7)	360	Eng	117				Furnished
287GKFJP-*5 (7)	340	Eng	140				Furnished	287GKFJP-*3 (7)	340	Eng	140				Furnished
287GMFJP-*5 (7)	318	Eng	157				Furnished	287GMFJP-*3 (7)	318	Eng	157				Furnished
287GMFJP-*8 (7)	318	Eng	145				Furnished	287GMFJP-*8 (7)	318	Eng	145				Furnished
287GPFJP-*5 (7)	290	Eng	175				Furnished	287GPFJP-*3 (7)	290	Eng	175				Furnished
287GPFJP-*8 (7)	290	Eng	162				Furnished	287GPFJP-*8 (7)	290	Eng	162				Furnished
287GSFJP-*5 (7)	265	Eng	196				Furnished	287GSFJP-*3 (7)	265	Eng	196				Furnished
287GSFJP-*8 (7)	265	Eng	180				Furnished	287GSFJP-*8 (7)	265	Eng	180				Furnished
287GTFJP-*8 (7)	230	Eng	211				Furnished	287GTFJP-*8 (7)	230	Eng	211				Furnished
877XAFJP-*5 (6)	670	Eng	100				Furnished	877XAFJP-*3 (6)	670	Eng	100				Furnished
877XBFJP-*5 (6)	632	Eng	106				Furnished	877XBFJP-*3 (6)	632	Eng	106				Furnished
877XCFJP-*5 (6)	588	Eng	114				Furnished	877XCFJP-*3 (6)	588	Eng	114				Furnished
877XDFJP-*5 (6)	554	Eng	121				Furnished	877XDFJP-*3 (6)	554	Eng	121				Furnished
877XEFJP-*5 (6)	486	Eng	138				Furnished	877XEFJP-*3 (6)	486	Eng	138				Furnished
877XFFJP-*5 (6)	429	Eng	156				Furnished	877XFFJP-*3 (6)	429	Eng	156				Furnished

Continued Next Page

CAUTION: Chelsea Recommends the Power Take-Off (PTO) installation on the 3000/4000 Series Transmissions to utilize a Vehicle Interface Module, or Chassis Manufacturers' equivalent controller to incorporate all the PTO control features available, this includes the "PTO Request" and "PTO Enable Output" feature. The "PTO Enable" circuit signals the Transmission Control Module(TCM) to maintain line pressure to the PTO Failure to provide this signal may not be sufficient to the PTO This may cause damage to the PTO and /or Transmission. Please see the Allison Transmission website and individual chassis manufacturer for installation details.

NOTE: "How to Calculate" Torque for two (2) PTO INTERMITTENT Applications. Combined Total = [Actual Torque of PTO#1] divided by [Per Cent of Engine] + [Actual Torque of PTO#2] divided by [Per Cent of Engine]. Application is OK if Combined Torque is less than 790 Lbs.ft for Intermittent use and the PTOs Torque Requirements are less than Stated PTO Torque Limits. For CONTINUOUS Applications = Application is OK if Combined Torque is less than 685 Lbs.ft and the PTOs Torque Requirements are less than Stated PTO Torque Limits x .80.

NOTE: 870/877 & 890/897 Series - All Stated Torque Values on this page are for CONTINUOUS Duty Cycles for Fire & Emergency Applications with ONE (1) PTO Torque Values are as follows - Continuous/Intermittent (Lb.ft): "A" Ratio-670/793, "B" Ratio-632/742, "C" Ratio-588/696, "D" Ratio-554/652, "E" Ratio-486/574, "F" Ratio-429/507, "G" Ratio 379/447 and "J" Ratio-334/394. Refer to Allison Tech Data (Watch # 291) for more information on Fire & Emergency PTO Applications and Transmission Torque Ratings.

NOTE: The Stated INTERMITTENT Torque Values on this Page for 267 and 280 Series are for Fire and Emergency Vehicle Applications with One PTO not to Exceed 790 Lbs.ft [1068 N.m] on the Transmission PTO Drive Gear. For Two PTO Applications the Combined Torque Valve Can Not Exceed 790 Lbs.ft [1068 N.m] at the Transmission PTO Drive Gear. See Example on "How to Calculate".

NOTE: All models require a hose assembly. For the 267 Series, use 329130-1X for left side, 329130-6X for top right and 329130-4X for right side. THESE HOSE ASSEMBLIES MUST BE ORDERED SEPARATELY. For 280, 870/877 and 890/897 Series - All Mounting Hardware and Hose Assemblies are Included with the Unit.

NOTE: The 267 Series is not available in the 3 arrangement with an "XK" output due to interference with the pressure lube fitting.

NOTE: 890 SERIES - The combined weight of pump, fittings, and hoses should not exceed 120 Lbs. without required support brackets. Refer to Owner's Manual (HY25-1890-M1/US) for complete details.

NOTE: Allison Transmission Maximum Power Capability of the Top Mount PTO Drive Gear on MD Series Transmissions used in the Fire and Emergency Vehicle Vocations has been Increased. The ratings on this page are valid only for the Side/Top Mount PTO Options. Refer to Allison Watch #291 for complete details.

(1) Input Gear Part No. 5-P-1173
(2) Input Gear Part No. 5-P-1225
(3) Input Gear Part No. 5-P-1293
(4) Input Gear Part No. 5-P-1350
(5) Input Gear Part No. 5-P-1351
(6) Input Gear Part No. 5-P-1428
(7) Input Gear Part No. 5-P-1491
(8) Input Gear Part No. 5-P-912
(9) Input Gear Part No. 5-P-913
(10) Input Gear Part No. 5-P-914
(11) Input Gear Part No. 5-P-915

Parker Hannifin Corporation
Chelsea Products Division
Olive Branch, MS 38654 USA

3000 EVS (Emergency Vehicles Only Top / Side PTO Provisions)
3500 EVS (Emergency Vehicles Only Top / Side PTO Provisions)

LEFT SIDE ONLY

TRANSMISSION GEAR DATA:
L.S. 10-BOLT Opening Gear FORWARD of Centerline
83 Teeth - L.H. HELIX

PITCH LINE TO APERTURE FACE:
1.7800" (45.2100MM)

TOP SIDE ONLY

TRANSMISSION GEAR DATA:
TOP 10-BOLT Opening Gear FORWARD of Centerline
83 Teeth - L.H. HELIX

PITCH LINE TO APERTURE FACE:
1.7800" (45.2100MM)

Caution: Application Approval Required for PTO Output Shaft Speeds Above 2500 RPM

LEFT Side PTO Model	Inter. Torq.	Dir. Rot.	Engine %		Filler Block	Adapter Assy.	Stud Kit	TOP Side PTO Model	Inter. Torq.	Dir. Rot.	Engine %		Filler Block	Adapter Assy.	Stud Kit
			Fwd.	Rev.							Fwd.	Rev.			
ONE SPEED - TWO GEAR - CONSTANT MESH															
877XGFJP-*5 (6)	379	Eng	177				Furnished	877XGFJP-*3 (6)	379	Eng	177				Furnished
877XHFJP-*5 (6)	356	Eng	188				Furnished	877XHFJP-*3 (6)	356	Eng	188				Furnished
877XJFJP-*5 (6)	334	Eng	200				Furnished	877XJFJP-*3 (6)	334	Eng	200				Furnished
877XKFJP-*5 (6)	292	Eng	166				Furnished	877XKFJP-*3 (6)	292	Eng	166				Furnished
ONE SPEED - TWO GEAR - POWERSHIFT (HYDRAULIC)															
280GBFJP-*5 (7)	300	Eng	73				Furnished	280GBFJP-*3 (7)	300	Eng	73				Furnished
280GBFJP-*8 (7)	300	Eng	69				Furnished	280GBFJP-*8 (7)	300	Eng	69				Furnished
280GCFJP-*5 (7)	390	Eng	88				Furnished	280GCFJP-*3 (7)	390	Eng	88				Furnished
280GCFJP-*8 (7)	390	Eng	83				Furnished	280GCFJP-*8 (7)	390	Eng	83				Furnished
280GDFJP-*5 (7)	390	Eng	106				Furnished	280GDFJP-*3 (7)	390	Eng	106				Furnished
280GDFJP-*8 (7)	390	Eng	99				Furnished	280GDFJP-*8 (7)	390	Eng	99				Furnished
280GGFJP-*5 (7)	360	Eng	126				Furnished	280GGFJP-*3 (7)	360	Eng	126				Furnished
280GGFJP-*8 (7)	360	Eng	117				Furnished	280GGFJP-*8 (7)	360	Eng	117				Furnished
280GKFJP-*5 (7)	340	Eng	140				Furnished	280GKFJP-*3 (7)	340	Eng	140				Furnished
280GMFJP-*5 (7)	318	Eng	157				Furnished	280GMFJP-*3 (7)	318	Eng	157				Furnished
280GMFJP-*8 (7)	318	Eng	145				Furnished	280GMFJP-*8 (7)	318	Eng	145				Furnished
280GPFJP-*5 (7)	290	Eng	175				Furnished	280GPFJP-*3 (7)	290	Eng	175				Furnished
280GPFJP-*8 (7)	290	Eng	162				Furnished	280GPFJP-*8 (7)	290	Eng	162				Furnished
280GSFJP-*5 (7)	265	Eng	196				Furnished	280GSFJP-*3 (7)	265	Eng	196				Furnished
280GSFJP-*8 (7)	265	Eng	180				Furnished	280GSFJP-*8 (7)	265	Eng	180				Furnished
280GTFJP-*8 (7)	230	Eng	211				Furnished	280GTFJP-*8 (7)	230	Eng	211				Furnished
870XAFJP-*5 (6)	670	Eng	100				Furnished	870XAFJP-*3 (6)	670	Eng	100				Furnished
870XBFJP-*5 (6)	632	Eng	106				Furnished	870XBFJP-*3 (6)	632	Eng	106				Furnished
870XCFJP-*5 (6)	588	Eng	114				Furnished	870XCFJP-*3 (6)	588	Eng	114				Furnished
870XDFJP-*5 (6)	554	Eng	121				Furnished	870XDFJP-*3 (6)	554	Eng	121				Furnished
870XEFJP-*5 (6)	486	Eng	138				Furnished	870XEFJP-*3 (6)	486	Eng	138				Furnished
870XFFJP-*5 (6)	429	Eng	156				Furnished	870XFFJP-*3 (6)	429	Eng	156				Furnished
870XGFJP-*5 (6)	379	Eng	177				Furnished	870XGFJP-*3 (6)	379	Eng	177				Furnished
870XHFJP-*5 (6)	356	Eng	188				Furnished	870XHFJP-*3 (6)	356	Eng	188				Furnished
870XJFJP-*5 (6)	334	Eng	200				Furnished	870XJFJP-*3 (6)	334	Eng	200				Furnished

Continued Next Page

CAUTION: Chelsea Recommends the Power Take-Off (PTO) installation on the 3000/4000 Series Transmissions to utilize a Vehicle Interface Module, or Chassis Manufacturers' equivalent controller to incorporate all the PTO control features available, this includes the "PTO Request" and "PTO Enable Output" feature. The "PTO Enable" circuit signals the Transmission Control Module(TCM) to maintain line pressure to the PTO Failure to provide this signal may not be sufficient to the PTO This may cause damage to the PTO and /or Transmission. Please see the Allison Transmission website and individual chassis manufacturer for installation details.

NOTE: "How to Calculate" Torque for two (2) PTO INTERMITTENT Applications. Combined Total = [Actual Torque of PTO#1] divided by [Per Cent of Engine] + [Actual Torque of PTO#2] divided by [Per Cent of Engine]. Application is OK if Combined Torque is less than 790 Lbs.ft for Intermittent use and the PTOs Torque Requirements are less than Stated PTO Torque Limits. For CONTINUOUS Applications = Application is OK if Combined Torque is less than 685 Lbs.ft and the PTOs Torque Requirements are less than Stated PTO Torque Limits x .80.

NOTE: 870/877 & 890/897 Series - All Stated Torque Values on this page are for CONTINUOUS Duty Cycles for Fire & Emergency Applications with ONE (1) PTO Torque Values are as follows - Continuous/Intermittent (Lb.ft): "A" Ratio-670/793, "B" Ratio-632/742, "C" Ratio-588/696, "D" Ratio-554/652, "E" Ratio-486/574, "F" Ratio-429/507, "G" Ratio 379/447 and "J" Ratio-334/394. Refer to Allison Tech Data (Watch # 291) for more information on Fire & Emergency PTO Applications and Transmission Torque Ratings.

NOTE: The Stated INTERMITTENT Torque Values on this Page for 267 and 280 Series are for Fire and Emergency Vehicle Applications with One PTO not to Exceed 790 Lbs.ft [1068 N.m] on the Transmission PTO Drive Gear. For Two PTO Applications the Combined Torque Valve Can Not Exceed 790 Lbs.ft [1068 N.m] at the Transmission PTO Drive Gear. See Example on "How to Calculate".

NOTE: All models require a hose assembly. For the 267 Series, use 329130-1X for left side, 329130-6X for top right and 329130-4X for right side. THESE HOSE ASSEMBLIES MUST BE ORDERED SEPARATELY. For 280, 870/877 and 890/897 Series - All Mounting Hardware and Hose Assemblies are Included with the Unit.

NOTE: The 267 Series is not available in the 3 arrangement with an "XK" output due to interference with the pressure lube fitting.

NOTE: 890 SERIES - The combined weight of pump, fittings, and hoses should not exceed 120 Lbs. without required support brackets. Refer to Owner's Manual (HY25-1890-M1/US) for complete details.

NOTE: Allison Transmission Maximum Power Capability of the Top Mount PTO Drive Gear on MD Series Transmissions used in the Fire and Emergency Vehicle Vocations has been Increased. The ratings on this page are valid only for the Side/Top Mount PTO Options. Refer to Allison Watch #291 for complete details.

(6) Input Gear Part No. 5-P-1428
(7) Input Gear Part No. 5-P-1491

Allison

Parker Hannifin Corporation
Chelsea Products Division
Olive Branch, MS 38654 USA

3000 EVS (Emergency Vehicles Only Top / Side PTO Provisions)
3500 EVS (Emergency Vehicles Only Top / Side PTO Provisions)

LEFT SIDE ONLY

TRANSMISSION GEAR DATA:
L.S. 10-BOLT Opening Gear FORWARD of Centerline
83 Teeth - L.H. HELIX

PITCH LINE TO APERTURE FACE:
1.7800" (45.2100MM)

TOP SIDE ONLY

TRANSMISSION GEAR DATA:
TOP 10-BOLT Opening Gear FORWARD of Centerline
83 Teeth - L.H. HELIX

PITCH LINE TO APERTURE FACE:
1.7800" (45.2100MM)

Caution: Application Approval Required for PTO Output Shaft Speeds Above 2500 RPM

LEFT Side PTO Model	Inter. Torq.	Dir. Rot.	Engine % Fwd.	Engine % Rev.	Filler Block	Adapter Assy.	Stud Kit	TOP Side PTO Model	Inter. Torq.	Dir. Rot.	Engine % Fwd.	Engine % Rev.	Filler Block	Adapter Assy.	Stud Kit
ONE SPEED - POWERSHIFT (HYDRAULIC) EXTENDED SHAFT															
890EAFJW-*5 (6)	670	Eng	100				Furnished	890TAFJW-*5 (6)	670	Eng	100				Furnished
890EBFJW-*5 (6)	632	Eng	106				Furnished	890TBFJW-*5 (6)	632	Eng	106				Furnished
890ECFJW-*5 (6)	588	Eng	114				Furnished	890TCFJW-*5 (6)	588	Eng	114				Furnished
890EDFJW-*5 (6)	554	Eng	121				Furnished	890TDFJW-*5 (6)	554	Eng	121				Furnished
890EEFJW-*5 (6)	486	Eng	138				Furnished	890TEFJW-*5 (6)	486	Eng	138				Furnished
890EFFJW-*5 (6)	429	Eng	156				Furnished	890TFFJW-*5 (6)	429	Eng	156				Furnished
890EGFJW-*5 (6)	378	Eng	177				Furnished	890TGFJW-*5 (6)	378	Eng	177				Furnished
890EHFJW-*5 (6)	356	Eng	188				Furnished	890THFJW-*5 (6)	356	Eng	188				Furnished
ONE SPEED - CONSTANT MESH EXTENDED SHAFT															
897EAFJW-*5 (6)	670	Eng	100				Furnished	897TAFJW-*5 (6)	670	Eng	100				Furnished
897EBFJW-*5 (6)	632	Eng	106				Furnished	897TBFJW-*5 (6)	632	Eng	106				Furnished
897ECFJW-*5 (6)	588	Eng	114				Furnished	897TCFJW-*5 (6)	588	Eng	114				Furnished
897EDFJW-*5 (6)	554	Eng	121				Furnished	897TDFJW-*5 (6)	554	Eng	121				Furnished
897EEFJW-*5 (6)	486	Eng	138				Furnished	897TEFJW-*5 (6)	486	Eng	138				Furnished
897EFFJW-*5 (6)	429	Eng	156				Furnished	897TFFJW-*5 (6)	429	Eng	156				Furnished
897EGFJW-*5 (6)	378	Eng	177				Furnished	897TGFJW-*5 (6)	378	Eng	177				Furnished
897EHFJW-*5 (6)	356	Eng	188				Furnished	897THFJW-*5 (6)	356	Eng	188				Furnished

CAUTION: Chelsea Recommends the Power Take-Off (PTO) installation on the 3000/4000 Series Transmissions to utilize a Vehicle Interface Module, or Chassis Manufacturers' equivalent controller to incorporate all the PTO control features available, this includes the "PTO Request" and "PTO Enable Output" feature. The "PTO Enable" circuit signals the Transmission Control Module(TCM) to maintain line pressure to the PTO Failure to provide this signal may not be sufficient to the PTO This may cause damage to the PTO and /or Transmission. Please see the Allison Transmission website and individual chassis manufacturer for installation details.

NOTE: "How to Calculate" Torque for two (2) PTO INTERMITTENT Applications. Combined Total = [Actual Torque of PTO#1] divided by [Per Cent of Engine] + [Actual Torque of PTO#2] divided by [Per Cent of Engine]. Application is OK if Combined Torque is less than 790 Lbs.ft for Intermittent use and the PTOs Torque Requirements are less than Stated PTO Torque Limits. For CONTINUOUS Applications = Application is OK if Combined Torque is less than 685 Lbs.ft and the PTOs Torque Requirements are less than Stated PTO Torque Limits x .80.

NOTE: 870/877 & 890/897 Series - All Stated Torque Values on this page are for CONTINUOUS Duty Cycles for Fire & Emergency Applications with ONE (1) PTO Torque Values are as follows - Continuous/Intermittent (Lb.ft): "A" Ratio-670/793, "B" Ratio-632/742, "C" Ratio-588/696, "D" Ratio-554/652, "E" Ratio-486/574, "F" Ratio-429/507, "G" Ratio 379/447 and "J" Ratio-334/394. Refer to Allison Tech Data (Watch # 291) for more information on Fire & Emergency PTO Applications and Transmission Torque Ratings.

NOTE: The Stated INTERMITTENT Torque Values on this Page for 267 and 280 Series are for Fire and Emergency Vehicle Applications with One PTO not to Exceed 790 Lbs.ft [1068 N.m] on the Transmission PTO Drive Gear. For Two PTO Applications the Combined Torque Valve Can Not Exceed 790 Lbs.ft [1068 N.m] at the Transmission PTO Drive Gear. See Example on "How to Calculate".

NOTE: All models require a hose assembly. For the 267 Series, use 329130-1X for left side, 329130-6X for top right and 329130-4X for right side. THESE HOSE ASSEMBLIES MUST BE ORDERED SEPARATELY. For 280, 870/877 and 890/897 Series - All Mounting Hardware and Hose Assemblies are Included with the Unit.

NOTE: The 267 Series is not available in the 3 arrangement with an "XK" output due to interference with the pressure lube fitting.

NOTE: 890 SERIES - The combined weight of pump, fittings, and hoses should not exceed 120 Lbs. without required support brackets. Refer to Owner's Manual (HY25-1890-M1/US) for complete details.

NOTE: Allison Transmission Maximum Power Capability of the Top Mount PTO Drive Gear on MD Series Transmissions used in the Fire and Emergency Vehicle Vocations has been Increased. The ratings on this page are valid only for the Side/Top Mount PTO Options. Refer to Allison Watch #291 for complete details.

(6) Input Gear Part No. 5-P-1428

Parker Hannifin Corporation
Chelsea Products Division
Olive Branch, MS 38654 USA

3000 (3000 Family - Side/Top PTO Provision w/ Retarder)

LEFT SIDE ONLY

TRANSMISSION GEAR DATA:
L.S. 10-BOLT Opening Gear FORWARD of Centerline
83 Teeth - L.H. HELIX

PITCH LINE TO APERTURE FACE:
1.7800" (45.2100MM)

TOP SIDE ONLY

TRANSMISSION GEAR DATA:
TOP 10-BOLT Opening Gear FORWARD of Centerline
83 Teeth - L.H. HELIX

PITCH LINE TO APERTURE FACE:
1.7800" (45.2100MM)

Caution: Application Approval Required for PTO Output Shaft Speeds Above 2500 RPM

ONE SPEED - TWO GEAR - CONSTANT MESH

LEFT Side PTO Model	Inter. Torq.	Dir. Rot.	Engine % Fwd.	Engine % Rev.	Filler Block	Adapter Assy.	Stud Kit	TOP Side PTO Model	Inter. Torq.	Dir. Rot.	Engine % Fwd.	Engine % Rev.	Filler Block	Adapter Assy.	Stud Kit
267SBFJP-*5 (4)	402	Eng	88				Furnished	267SBFJP-*3 (4)	402	Eng	88				Furnished
267SDFJP-*5 (3)	390	Eng	106				Furnished	267SDFJP-*3 (3)	390	Eng	106				Furnished
267SGFJP-*5 (2)	360	Eng	126				Furnished	267SGFJP-*3 (2)	360	Eng	126				Furnished
267SMFJP-*5 (5)	309	Eng	157				Furnished	267SMFJP-*3 (5)	309	Eng	157				Furnished
267SSFJP-*5 (1)	247	Eng	196				Furnished	267SSFJP-*3 (1)	247	Eng	196				Furnished
267XBFJP-*5 (8)	335	Eng	88				Furnished	267XBFJP-*3 (8)	335	Eng	88				Furnished
267XDFJP-*5 (9)	325	Eng	106				Furnished	267XDFJP-*3 (9)	325	Eng	106				Furnished
267XGFJP-*5 (10)	300	Eng	126				Furnished	267XGFJP-*3 (10)	300	Eng	126				Furnished
267XMFJP-*5 (11)	265	Eng	157				Furnished	267XMFJP-*3 (11)	265	Eng	157				Furnished
267XSFJP-*5 (1)	247	Eng	196				Furnished	267XSFJP-*3 (1)	247	Eng	196				Furnished
287GBFJP-*5 (7)	300	Eng	73				Furnished	287GBFJP-*3 (7)	300	Eng	73				Furnished
287GBFJP-*8 (7)	300	Eng	69				Furnished	287GBFJP-*8 (7)	300	Eng	69				Furnished
287GCFJP-*5 (7)	390	Eng	88				Furnished	287GCFJP-*3 (7)	390	Eng	88				Furnished
287GCFJP-*8 (7)	390	Eng	83				Furnished	287GCFJP-*8 (7)	390	Eng	83				Furnished
287GDFJP-*5 (7)	390	Eng	87				Furnished	287GDFJP-*3 (7)	390	Eng	87				Furnished
287GDFJP-*8 (7)	390	Eng	99				Furnished	287GDFJP-*8 (7)	390	Eng	99				Furnished
287GGFJP-*5 (7)	360	Eng	126				Furnished	287GGFJP-*3 (7)	360	Eng	126				Furnished
287GGFJP-*8 (7)	360	Eng	117				Furnished	287GGFJP-*8 (7)	360	Eng	117				Furnished
287GKFJP-*5 (7)	340	Eng	140				Furnished	287GKFJP-*3 (7)	340	Eng	140				Furnished
287GMFJP-*5 (7)	309	Eng	157				Furnished	287GMFJP-*3 (7)	309	Eng	157				Furnished
287GMFJP-*8 (7)	318	Eng	145				Furnished	287GMFJP-*8 (7)	318	Eng	145				Furnished
287GPFJP-*5 (7)	275	Eng	175				Furnished	287GPFJP-*3 (7)	275	Eng	175				Furnished
287GPFJP-*8 (7)	290	Eng	162				Furnished	287GPFJP-*8 (7)	290	Eng	162				Furnished
287GSFJP-*5 (7)	247	Eng	196				Furnished	287GSFJP-*3 (7)	247	Eng	196				Furnished
287GSFJP-*8 (7)	265	Eng	180				Furnished	287GSFJP-*8 (7)	265	Eng	180				Furnished
287GTFJP-*8 (7)	230	Eng	211				Furnished	287GTFJP-*8 (7)	230	Eng	211				Furnished
877XAFJP-*5 (6)	485	Eng	100				Furnished	877XAFJP-*3 (6)	485	Eng	100				Furnished
877XBFJP-*5 (6)	458	Eng	106				Furnished	877XBFJP-*3 (6)	458	Eng	106				Furnished
877XCFJP-*5 (6)	425	Eng	114				Furnished	877XCFJP-*3 (6)	425	Eng	114				Furnished
877XDFJP-*5 (6)	401	Eng	121				Furnished	877XDFJP-*3 (6)	401	Eng	121				Furnished
877XEFJP-*5 (6)	351	Eng	138				Furnished	877XEFJP-*3 (6)	351	Eng	138				Furnished
877XFFJP-*5 (6)	311	Eng	156				Furnished	877XFFJP-*3 (6)	311	Eng	156				Furnished

Continued Next Page

CAUTION: Chelsea Recommends the Power Take-Off (PTO) installation on the 3000/4000 Series Transmissions to utilize a Vehicle Interface Module, or Chassis Manufacturers' equivalent controller to incorporate all the PTO control features available, this includes the "PTO Request" and "PTO Enable Output" feature. The "PTO Enable" circuit signals the Transmission Control Module(TCM) to maintain line pressure to the PTO Failure to provide this signal may not be sufficient to the PTO This may cause damage to the PTO and /or Transmission. Please see the Allison Transmission website and individual chassis manufacturer for installation details.

CAUTION: The Torque Rating on Certain Ratios is Restricted by Allison Transmission to a Torque Limit of 485 Ft.lbs on their PTO Drive Gear.

NOTE: The Allison Model MD-3066 has two 10 bolt aperture openings located at 9 o'clock on the left side and 2 o'clock on the right side (Top Right). Every PTO mounted on this transmission must have the pressure lube option ("P").

NOTE: All models require a hose assembly. For the 267 Series, use 329130-1X for left side, 329130-6X for top right and 329130-4X for right side. THESE HOSE ASSEMBLIES MUST BE ORDERED SEPARATELY. For 280, 870/877 and 890/897 Series - All Mounting Hardware and Hose Assemblies are Included with the Unit.

NOTE: The 267 Series is not available in the 3 arrangement with an "XK" output due to interference with the pressure lube fitting.

NOTE: Do not use Adapter Gear Assemblies on Allison 3000/4000 Series Automatic Transmissions.

NOTE: 280, 890 and 870 Family of PTOs stated Torque is for Intermittent and Continuous Duty Applications.

NOTE: 890 SERIES - The combined weight of pump, fittings, and hoses should not exceed 120 Lbs. without required support brackets. Refer to Owner's Manual (HY25-1890-M1/US) for complete details.

(1) Input Gear Part No. 5-P-1173
(2) Input Gear Part No. 5-P-1225
(3) Input Gear Part No. 5-P-1293
(4) Input Gear Part No. 5-P-1350
(5) Input Gear Part No. 5-P-1351
(6) Input Gear Part No. 5-P-1428
(7) Input Gear Part No. 5-P-1491
(8) Input Gear Part No. 5-P-912
(9) Input Gear Part No. 5-P-913
(10) Input Gear Part No. 5-P-914
(11) Input Gear Part No. 5-P-915

Parker Hannifin Corporation
Chelsea Products Division
Olive Branch, MS 38654 USA

3000 (3000 Family - Side/Top PTO Provision w/ Retarder)

LEFT SIDE ONLY

TRANSMISSION GEAR DATA:
L.S. 10-BOLT Opening Gear FORWARD of Centerline
83 Teeth - L.H. HELIX

PITCH LINE TO APERTURE FACE:
1.7800" (45.2100MM)

TOP SIDE ONLY

TRANSMISSION GEAR DATA:
TOP 10-BOLT Opening Gear FORWARD of Centerline
83 Teeth - L.H. HELIX

PITCH LINE TO APERTURE FACE:
1.7800" (45.2100MM)

Caution: Application Approval Required for PTO Output Shaft Speeds Above 2500 RPM

LEFT Side PTO Model	Inter. Torq.	Dir. Rot.	Engine % Fwd.	Engine % Rev.	Filler Block	Adapter Assy.	Stud Kit	TOP Side PTO Model	Inter. Torq.	Dir. Rot.	Engine % Fwd.	Engine % Rev.	Filler Block	Adapter Assy.	Stud Kit
ONE SPEED - TWO GEAR - CONSTANT MESH															
877XGFJP-*5 (6)	274	Eng	177				Furnished	877XGFJP-*3 (6)	274	Eng	177				Furnished
877XHFJP-*5 (6)	258	Eng	188				Furnished	877XHFJP-*3 (6)	258	Eng	188				Furnished
877XJFJP-*5 (6)	242	Eng	200				Furnished	877XJFJP-*3 (6)	242	Eng	200				Furnished
877XKFJP-*5 (6)	292	Eng	166				Furnished	877XKFJP-*3 (6)	292	Eng	166				Furnished
ONE SPEED - TWO GEAR - POWERSHIFT (HYDRAULIC)															
280GBFJP-*5 (7)	300	Eng	73				Furnished	280GBFJP-*3 (7)	300	Eng	73				Furnished
280GBFJP-*8 (7)	300	Eng	69				Furnished	280GBFJP-*8 (7)	300	Eng	69				Furnished
280GCFJP-*5 (7)	390	Eng	88				Furnished	280GCFJP-*3 (7)	390	Eng	88				Furnished
280GCFJP-*8 (7)	390	Eng	83				Furnished	280GCFJP-*8 (7)	390	Eng	83				Furnished
280GDFJP-*5 (7)	390	Eng	106				Furnished	280GDFJP-*3 (7)	390	Eng	106				Furnished
280GDFJP-*8 (7)	390	Eng	99				Furnished	280GDFJP-*8 (7)	390	Eng	99				Furnished
280GGFJP-*5 (7)	360	Eng	126				Furnished	280GGFJP-*3 (7)	360	Eng	126				Furnished
280GGFJP-*8 (7)	360	Eng	117				Furnished	280GGFJP-*8 (7)	360	Eng	117				Furnished
280GKFJP-*5 (7)	340	Eng	140				Furnished	280GKFJP-*3 (7)	340	Eng	140				Furnished
280GMFJP-*5 (7)	309	Eng	157				Furnished	280GMFJP-*3 (7)	309	Eng	157				Furnished
280GMFJP-*8 (7)	318	Eng	145				Furnished	280GMFJP-*8 (7)	318	Eng	145				Furnished
280GPFJP-*5 (7)	275	Eng	175				Furnished	280GPFJP-*3 (7)	275	Eng	175				Furnished
280GPFJP-*8 (7)	290	Eng	162				Furnished	280GPFJP-*8 (7)	290	Eng	162				Furnished
280GSFJP-*5 (7)	247	Eng	196				Furnished	280GSFJP-*3 (7)	247	Eng	196				Furnished
280GSFJP-*8 (7)	265	Eng	180				Furnished	280GSFJP-*8 (7)	265	Eng	180				Furnished
870XAFJP-*5 (6)	485	Eng	100				Furnished	870XAFJP-*3 (6)	485	Eng	100				Furnished
870XBFJP-*5 (6)	458	Eng	106				Furnished	870XBFJP-*3 (6)	458	Eng	106				Furnished
870XCFJP-*5 (6)	425	Eng	114				Furnished	870XCFJP-*3 (6)	425	Eng	114				Furnished
870XDFJP-*5 (6)	401	Eng	121				Furnished	870XDFJP-*3 (6)	401	Eng	121				Furnished
870XEFJP-*5 (6)	351	Eng	138				Furnished	870XEFJP-*3 (6)	351	Eng	138				Furnished
870XFFJP-*5 (6)	311	Eng	156				Furnished	870XFFJP-*3 (6)	311	Eng	156				Furnished
870XGFJP-*5 (6)	274	Eng	177				Furnished	870XGFJP-*3 (6)	274	Eng	177				Furnished
870XHFJP-*5 (6)	258	Eng	188				Furnished	870XHFJP-*3 (6)	258	Eng	188				Furnished
870XJFJP-*5 (6)	242	Eng	200				Furnished	870XJFJP-*3 (6)	242	Eng	200				Furnished

Continued Next Page

CAUTION: Chelsea Recommends the Power Take-Off (PTO) installation on the 3000/4000 Series Transmissions to utilize a Vehicle Interface Module, or Chassis Manufacturers' equivalent controller to incorporate all the PTO control features available, this includes the "PTO Request" and "PTO Enable Output" feature. The "PTO Enable" circuit signals the Transmission Control Module(TCM) to maintain line pressure to the PTO Failure to provide this signal may not be sufficient to the PTO This may cause damage to the PTO and /or Transmission. Please see the Allison Transmission website and individual chassis manufacturer for installation details.

CAUTION: The Torque Rating on Certain Ratios is Restricted by Allison Transmission to a Torque Limit of 485 Ft.lbs on their PTO Drive Gear.

NOTE: The Allison Model MD-3066 has two 10 bolt aperture openings located at 9 o'clock on the left side and 2 o'clock on the right side (Top Right). Every PTO mounted on this transmission must have the pressure lube option ("P").

NOTE: All models require a hose assembly. For the 267 Series, use 329130-1X for left side, 329130-6X for top right and 329130-4X for right side. THESE HOSE ASSEMBLIES MUST BE ORDERED SEPARATELY. For 280, 870/877 and 890/897 Series - All Mounting Hardware and Hose Assemblies are Included with the Unit.

NOTE: The 267 Series is not available in the 3 arrangement with an "XK" output due to interference with the pressure lube fitting.

NOTE: Do not use Adapter Gear Assemblies on Allison 3000/4000 Series Automatic Transmissions.

NOTE: 280, 890 and 870 Family of PTOs stated Torque is for Intermittent and Continuous Duty Applications.

NOTE: 890 SERIES - The combined weight of pump, fittings, and hoses should not exceed 120 Lbs. without required support brackets. Refer to Owner's Manual (HY25-1890-M1/US) for complete details.

(6) Input Gear Part No. 5-P-1428
(7) Input Gear Part No. 5-P-1491

Parker Hannifin Corporation
Chelsea Products Division
Olive Branch, MS 38654 USA

3000 (3000 Family - Side/Top PTO Provision w/ Retarder)

LEFT SIDE ONLY

TRANSMISSION GEAR DATA:
L.S. 10-BOLT Opening Gear FORWARD of Centerline
83 Teeth - L.H. HELIX

PITCH LINE TO APERTURE FACE:
1.7800" (45.2100MM)

TOP SIDE ONLY

TRANSMISSION GEAR DATA:
TOP 10-BOLT Opening Gear FORWARD of Centerline
83 Teeth - L.H. HELIX

PITCH LINE TO APERTURE FACE:
1.7800" (45.2100MM)

Caution: Application Approval Required for PTO Output Shaft Speeds Above 2500 RPM

LEFT Side PTO Model	Inter. Torq.	Dir. Rot.	Engine %		Filler Block	Adapter Assy.	Stud Kit	TOP Side PTO Model	Inter. Torq.	Dir. Rot.	Engine %		Filler Block	Adapter Assy.	Stud Kit
			Fwd.	Rev.							Fwd.	Rev.			
ONE SPEED - POWERSHIFT (HYDRAULIC) EXTENDED SHAFT															
890FAFJW-*5 (6)	485	Eng	100				Furnished								
890FBFJW-*5 (6)	458	Eng	106				Furnished								
890FCFJW-*5 (6)	425	Eng	114				Furnished								
890FDFJW-*5 (6)	401	Eng	121				Furnished								
890FEFJW-*5 (6)	351	Eng	138				Furnished								
890FFFJW-*5 (6)	311	Eng	156				Furnished								
890FGFJW-*5 (6)	274	Eng	177				Furnished								
890FHFJW-*5 (6)	258	Eng	188				Furnished								
ONE SPEED - CONSTANT MESH EXTENDED SHAFT															
897FAFJW-*5 (6)	485	Eng	100				Furnished								
897FBFJW-*5 (6)	458	Eng	106				Furnished								
897FCFJW-*5 (6)	425	Eng	114				Furnished								
897FDFJW-*5 (6)	401	Eng	121				Furnished								
897FEFJW-*5 (6)	351	Eng	138				Furnished								
897FFFJW-*5 (6)	311	Eng	156				Furnished								
897FGFJW-*5 (6)	274	Eng	177				Furnished								
897FHFJW-*5 (6)	258	Eng	188				Furnished								

CAUTION: Chelsea Recommends the Power Take-Off (PTO) installation on the 3000/4000 Series Transmissions to utilize a Vehicle Interface Module, or Chassis Manufacturers' equivalent controller to incorporate all the PTO control features available, this includes the "PTO Request" and "PTO Enable Output" feature. The "PTO Enable" circuit signals the Transmission Control Module(TCM) to maintain line pressure to the PTO Failure to provide this signal may not be sufficient to the PTO This may cause damage to the PTO and /or Transmission. Please see the Allison Transmission website and individual chassis manufacturer for installation details.

CAUTION: The Torque Rating on Certain Ratios is Restricted by Allison Transmission to a Torque Limit of 485 Ft.lbs on their PTO Drive Gear.

NOTE: The Allison Model MD-3066 has two 10 bolt aperture openings located at 9 o'clock on the left side and 2 o'clock on the right side (Top Right). Every PTO mounted on this transmission must have the pressure lube option ("P").

NOTE: All models require a hose assembly. For the 267 Series, use 329130-1X for left side, 329130-6X for top right and 329130-4X for right side. THESE HOSE ASSEMBLIES MUST BE ORDERED SEPARATELY. For 280, 870/877 and 890/897 Series - All Mounting Hardware and Hose Assemblies are Included with the Unit.

NOTE: The 267 Series is not available in the 3 arrangement with an "XK" output due to interference with the pressure lube fitting.

NOTE: Do not use Adapter Gear Assemblies on Allison 3000/4000 Series Automatic Transmissions.

NOTE: 280, 890 and 870 Family of PTOs stated Torque is for Intermittent and Continuous Duty Applications.

NOTE: 890 SERIES - The combined weight of pump, fittings, and hoses should not exceed 120 Lbs. without required support brackets. Refer to Owner's Manual (HY25-1890-M1/US) for complete details.

(6) Input Gear Part No. 5-P-1428

Allison

Parker Hannifin Corporation
Chelsea Products Division
Olive Branch, MS 38654 USA

1000 (GM 3600 Cab-Chassis)

RIGHT SIDE ONLY

TRANSMISSION GEAR DATA:
R.S. 06-BOLT Opening Gear FORWARD of Centerline
64 Teeth - SPUR

PITCH LINE TO APERTURE FACE:
1.0080" (25.6032MM)

Caution: Application Approval Required for PTO Output Shaft Speeds Above 2500 RPM

	Inter. Torq.	Dir. Rot.	Engine % Fwd.	Engine % Rev.	Filler Block	Adapter Assy.	Stud Kit	RIGHT Side PTO Model	Inter. Torq.	Dir. Rot.	Engine % Fwd.	Engine % Rev.	Filler Block	Adapter Assy.	Stud Kit
ONE SPEED - TWO GEAR - POWERSHIFT (HYDRAULIC)															
								252GDHVX-*5 (1)	120	Eng	122				Furnished
								252GMHVX-*5 (2)	50	Eng	178				Furnished

252 Pumps
Pumps Offered in the PGP511 with 5/8" - 9T or 3/4" - 11T Shaft / SAE "A" Flange

Option Order Code	Chelsea Pump Model	Displacement in^3/rev	Displacement Gal/rev	Cont. Pressure PSI	Max Speed RPM	Shaft Size
1116	CGP-P11C016-1AC	0.37	0.002	3988	4000	5/8" 9T
1121	CGP-P11C021-1AC	0.49	0.002	3988	4000	5/8" 9T
1126	CGP-P11C026-1AC	0.61	0.003	3988	3600	5/8" 9T
1129	CGP-P11C029-1AC	0.67	0.003	3988	3600	5/8" 9T
1137	CGP-P11C037-1AC	0.85	0.004	3988	3300	5/8" 9T
1449	CGP-P31C054-1AE	1.24	0.005	3500	3000	5/8" 9T
1462	CGP-P31C061-1AE	1.40	0.006	3500	3000	5/8" 9T
P37	CGP-P11C037-5AC	0.85	0.004	3988	3300	3/4" 11T
P42	CGP-P11C042-5AC	0.98	0.004	3988	3000	3/4" 11T
P71	CGP-P11C071-5AC	1.65	0.007	2900	2400	3/4" 11T

All 252 Series Pumps Must Be Rear Ported

CAUTION: The "PTO Enable" circuit signals the Transmission Control Module(TCM) to maintain line pressure to the PTO Failure to provide this signal will activate the Variable Modulated Main Pressure and line pressure may not be sufficient to the PTO This may cause damage to the PTO and /or Transmission.

NOTE: For MY2015 GM has changed the engine exhaust design. The exhaust pipe can not be removed as in previous model years. This is causing issues with PTO installation. Contact GM Upfitter Integration for assistance on PTO installation.

NOTE: There is torque converter lock up feature available with the 1000 series transmission. The torque converter lock up feature comes on and is controlled by the Transmission Control Module (TCM) at 1100 RPM transmission turbine speed when a signal is provided to the "PTO Enable" circuit of the TCM by the PTO switch. This equates to 1200-1250 RPM or higher engine speed, depending on PTO load. Lock up will only come on in the "PARK" position. The lock up clutch does not come on automatically in "DRIVE" at 1100 RPM. Refer to the appropriate owner's manual for wiring installation.

NOTE: The PTO torque ratings shown are based on the maximum allowable torque of 250 lb-ft at the 64 tooth gear in the transmission with the PTO on one opening only. With PTOs mounted on both openings the maximum allowable torque at the 64 tooth gear in the transmission is 200 lb-ft. For a more precise evaluation of your PTO application refer to the Allison Body Builders Book, Section F, PTO Systems Provisions.

NOTE: The 252 Series for MY2015 and later GM C/K series Cab/Chassis order wiring harness part number 75-P-33. For 2007-2014 order Chelsea part number 329620X. This harness must be ordered separately and is required for proper PTO to Engine interface operation. Refer to GM UI Bulletin #80.

NOTE: Only the 12v "B" option shifter can be used on this application.

NOTE: The left PTO aperture opening on this application is not usable due to engine fuel lines blocking the opening.

(1) Input Gear Part No. 5-P-1294
(2) Input Gear Part No. 5-P-1386

Parker Hannifin Corporation
Chelsea Products Division
Olive Branch, MS 38654 USA

3700
3700 SP
MD-3070P (Close Ratio)

LEFT SIDE ONLY

TRANSMISSION GEAR DATA:
L.S. 10-BOLT Opening Gear FORWARD of Centerline
68 Teeth - L.H. HELIX

PITCH LINE TO APERTURE FACE:
1.7800" (45.2100MM)

RIGHT SIDE ONLY

TRANSMISSION GEAR DATA:
R.S. 10-BOLT Opening Gear FORWARD of Centerline
68 Teeth - L.H. HELIX

PITCH LINE TO APERTURE FACE:
1.7800" (45.2100MM)

Caution: Application Approval Required for PTO Output Shaft Speeds Above 2500 RPM

LEFT Side PTO Model	Inter. Torq.	Dir. Rot.	Engine % Fwd.	Engine % Rev.	Filler Block	Adapter Assy.	Stud Kit	RIGHT Side PTO Model	Inter. Torq.	Dir. Rot.	Engine % Fwd.	Engine % Rev.	Filler Block	Adapter Assy.	Stud Kit
ONE SPEED - TWO GEAR - CONSTANT MESH															
267SBFJP-*5 (4)	402	Eng	72				Furnished	267SBFJP-*3 (4)	402	Eng	72				Furnished
267SDFJP-*5 (3)	390	Eng	87				Furnished	267SDFJP-*3 (3)	390	Eng	87				Furnished
267SGFJP-*5 (2)	360	Eng	103				Furnished	267SGFJP-*3 (2)	360	Eng	103				Furnished
267SMFJP-*5 (5)	318	Eng	129				Furnished	267SMFJP-*3 (5)	318	Eng	129				Furnished
267SSFJP-*5 (1)	265	Eng	161				Furnished	267SSFJP-*3 (1)	265	Eng	161				Furnished
267XBFJP-*5 (8)	335	Eng	72				Furnished	267XBFJP-*3 (8)	335	Eng	72				Furnished
267XDFJP-*5 (9)	325	Eng	87				Furnished	267XDFJP-*3 (9)	325	Eng	87				Furnished
267XGFJP-*5 (10)	300	Eng	103				Furnished	267XGFJP-*3 (10)	300	Eng	103				Furnished
267XMFJP-*5 (11)	265	Eng	129				Furnished	267XMFJP-*3 (11)	265	Eng	129				Furnished
267XSFJP-*5 (1)	250	Eng	161				Furnished	267XSFJP-*3 (1)	250	Eng	161				Furnished
287GBFJP-*5 (7)	300	Eng	60				Furnished	287GBFJP-*3 (7)	300	Eng	60				Furnished
287GBFJP-*8 (7)	300	Eng	56				Furnished	287GBFJP-*8 (7)	300	Eng	56				Furnished
287GCFJP-*5 (7)	390	Eng	72				Furnished	287GCFJP-*3 (7)	390	Eng	72				Furnished
287GCFJP-*8 (7)	390	Eng	68				Furnished	287GCFJP-*8 (7)	390	Eng	68				Furnished
287GDFJP-*5 (7)	390	Eng	87				Furnished	287GDFJP-*3 (7)	390	Eng	87				Furnished
287GDFJP-*8 (7)	390	Eng	81				Furnished	287GDFJP-*8 (7)	390	Eng	81				Furnished
287GGFJP-*5 (7)	360	Eng	103				Furnished	287GGFJP-*3 (7)	360	Eng	103				Furnished
287GGFJP-*8 (7)	360	Eng	96				Furnished	287GGFJP-*8 (7)	360	Eng	96				Furnished
287GKFJP-*5 (7)	340	Eng	115				Furnished	287GKFJP-*3 (7)	340	Eng	115				Furnished
287GMFJP-*5 (7)	318	Eng	129				Furnished	287GMFJP-*3 (7)	318	Eng	129				Furnished
287GMFJP-*8 (7)	318	Eng	119				Furnished	287GMFJP-*8 (7)	318	Eng	119				Furnished
287GPFJP-*5 (7)	290	Eng	144				Furnished	287GPFJP-*3 (7)	290	Eng	144				Furnished
287GPFJP-*8 (7)	290	Eng	132				Furnished	287GPFJP-*8 (7)	290	Eng	132				Furnished
287GSFJP-*5 (7)	265	Eng	161				Furnished	287GSFJP-*3 (7)	265	Eng	161				Furnished
287GSFJP-*8 (7)	265	Eng	147				Furnished	287GSFJP-*8 (7)	265	Eng	147				Furnished
287GTFJP-*5 (7)	240	Eng	180				Furnished	287GTFJP-*3 (7)	240	Eng	180				Furnished
287GTFJP-*8 (7)	240	Eng	173				Furnished	287GTFJP-*8 (7)	240	Eng	173				Furnished
877XAFJP-*5 (6)	591	Eng	82				Furnished	877XAFJP-*3 (6)	591	Eng	82				Furnished
877XBFJP-*5 (6)	557	Eng	87				Furnished	877XBFJP-*3 (6)	557	Eng	87				Furnished
877XCFJP-*5 (6)	522	Eng	93				Furnished	877XCFJP-*3 (6)	522	Eng	93				Furnished
877XDFJP-*5 (6)	490	Eng	99				Furnished	877XDFJP-*3 (6)	490	Eng	99				Furnished
877XEFJP-*5 (6)	429	Eng	113				Furnished	877XEFJP-*3 (6)	429	Eng	113				Furnished

Continued Next Page

CAUTION: Chelsea Recommends the Power Take-Off (PTO) installation on the 3000/4000 Series Transmissions to utilize a Vehicle Interface Module, or Chassis Manufacturers' equivalent controller to incorporate all the PTO control features available, this includes the "PTO Request" and "PTO Enable Output" feature. The "PTO Enable" circuit signals the Transmission Control Module (TCM) to maintain line pressure to the PTO Failure to provide this signal may not be sufficient to the PTO This may cause damage to the PTO and /or Transmission. Please see the Allison Transmission website and individual chassis manufacturer for installation details.

CAUTION: The Torque Rating on Certain Ratios is Restricted by Allison Transmission to a Torque Limit of 685 Ft.lbs on their PTO Drive Gear.

NOTE: The Right Side opening is located at approximately 1 o'clock when viewed from the rear. All PTOs mounted in this location require pressure lubrication.

NOTE: Do not use Geared Adapter Assemblies on Allison 3000/4000 Series Automatic Transmissions.

NOTE: All models require a hose assembly. For the 267 Series, use 329130-1X for left side, 329130-6X for top right and 329130-4X for right side. THESE HOSE ASSEMBLIES MUST BE ORDERED SEPARATELY. For 280, 870/877 and 890/897 Series - All Mounting Hardware and Hose Assemblies are Included with the Unit.

NOTE: The 267 Series is not available in the 3 arrangement with an "XK" output due to interference with the pressure lube fitting.

NOTE: The 3700 and MD3070 have PTO Availability on the Left-Side Only. The Right-Side is Utilized by OE Equipment. The Transfer Case is Integral to the Transmission

NOTE: 280 and 870 Family of PTOs stated Torque is for Intermittent and Continuous Duty Applications.

(1) Input Gear Part No. 5-P-1173
(2) Input Gear Part No. 5-P-1225
(3) Input Gear Part No. 5-P-1293
(4) Input Gear Part No. 5-P-1350
(5) Input Gear Part No. 5-P-1351
(6) Input Gear Part No. 5-P-1428
(7) Input Gear Part No. 5-P-1491
(8) Input Gear Part No. 5-P-912
(9) Input Gear Part No. 5-P-913
(10) Input Gear Part No. 5-P-914
(11) Input Gear Part No. 5-P-915

Parker Hannifin Corporation
Chelsea Products Division
Olive Branch, MS 38654 USA

3700
3700 SP
MD-3070P (Close Ratio)

LEFT SIDE ONLY

TRANSMISSION GEAR DATA:
L.S. 10-BOLT Opening Gear FORWARD of Centerline
68 Teeth - L.H. HELIX

PITCH LINE TO APERTURE FACE:
1.7800" (45.2100MM)

RIGHT SIDE ONLY

TRANSMISSION GEAR DATA:
R.S. 10-BOLT Opening Gear FORWARD of Centerline
68 Teeth - L.H. HELIX

PITCH LINE TO APERTURE FACE:
1.7800" (45.2100MM)

Caution: Application Approval Required for PTO Output Shaft Speeds Above 2500 RPM

LEFT Side PTO Model	Inter. Torq.	Dir. Rot.	Engine % Fwd.	Engine % Rev.	Filler Block	Adapter Assy.	Stud Kit	RIGHT Side PTO Model	Inter. Torq.	Dir. Rot.	Engine % Fwd.	Engine % Rev.	Filler Block	Adapter Assy.	Stud Kit
ONE SPEED - TWO GEAR - CONSTANT MESH															
877XFFJP-*5 (6)	379	Eng	128				Furnished	877XFFJP-*3 (6)	379	Eng	128				Furnished
877XGFJP-*5 (6)	334	Eng	145				Furnished	877XGFJP-*3 (6)	334	Eng	145				Furnished
877XHFJP-*5 (6)	315	Eng	154				Furnished	877XHFJP-*3 (6)	315	Eng	154				Furnished
877XJFJP-*5 (6)	295	Eng	164				Furnished	877XHFJP-*3 (6)	295	Eng	164				Furnished
ONE SPEED - TWO GEAR - POWERSHIFT (HYDRAULIC)															
280GBFJP-*5 (7)	300	Eng	60				Furnished	280GBFJP-*3 (7)	300	Eng	60				Furnished
280GBFJP-*8 (7)	300	Eng	56				Furnished	280GBFJP-*8 (7)	300	Eng	56				Furnished
280GCFJP-*5 (7)	390	Eng	72				Furnished	280GCFJP-*3 (7)	390	Eng	72				Furnished
280GCFJP-*8 (7)	390	Eng	68				Furnished	280GCFJP-*8 (7)	390	Eng	68				Furnished
280GDFJP-*5 (7)	390	Eng	87				Furnished	280GDFJP-*3 (7)	390	Eng	87				Furnished
280GDFJP-*8 (7)	390	Eng	81				Furnished	280GDFJP-*8 (7)	390	Eng	81				Furnished
280GGFJP-*5 (7)	360	Eng	103				Furnished	280GGFJP-*3 (7)	360	Eng	103				Furnished
280GGFJP-*8 (7)	360	Eng	96				Furnished	280GGFJP-*8 (7)	360	Eng	96				Furnished
280GKFJP-*5 (7)	340	Eng	115				Furnished	280GKFJP-*3 (7)	340	Eng	115				Furnished
280GMFJP-*5 (7)	318	Eng	129				Furnished	280GMFJP-*3 (7)	318	Eng	129				Furnished
280GMFJP-*8 (7)	318	Eng	119				Furnished	280GMFJP-*8 (7)	318	Eng	119				Furnished
280GPFJP-*5 (7)	290	Eng	144				Furnished	280GPFJP-*3 (7)	290	Eng	144				Furnished
280GPFJP-*8 (7)	290	Eng	132				Furnished	280GPFJP-*8 (7)	290	Eng	132				Furnished
280GSFJP-*5 (7)	265	Eng	161				Furnished	280GSFJP-*3 (7)	265	Eng	161				Furnished
280GSFJP-*8 (7)	265	Eng	147				Furnished	280GSFJP-*8 (7)	265	Eng	147				Furnished
280GTFJP-*5 (7)	240	Eng	180				Furnished	280GTFJP-*3 (7)	240	Eng	180				Furnished
280GTFJP-*8 (7)	240	Eng	173				Furnished	280GTFJP-*8 (7)	240	Eng	173				Furnished
870XAFJP-*5 (6)	591	Eng	82				Furnished	870XAFJP-*3 (6)	591	Eng	82				Furnished
870XBFJP-*5 (6)	557	Eng	87				Furnished	870XBFJP-*3 (6)	557	Eng	87				Furnished
870XCFJP-*5 (6)	522	Eng	93				Furnished	870XCFJP-*3 (6)	522	Eng	93				Furnished
870XDFJP-*5 (6)	490	Eng	99				Furnished	870XDFJP-*3 (6)	490	Eng	99				Furnished
870XEFJP-*5 (6)	429	Eng	113				Furnished	870XEFJP-*3 (6)	429	Eng	113				Furnished
870XFFJP-*5 (6)	379	Eng	128				Furnished	870XFFJP-*3 (6)	379	Eng	128				Furnished
870XGFJP-*5 (6)	334	Eng	145				Furnished	870XGFJP-*3 (6)	334	Eng	145				Furnished
870XHFJP-*5 (6)	315	Eng	154				Furnished	870XHFJP-*3 (6)	315	Eng	154				Furnished
870XJFJP-*5 (6)	295	Eng	164				Furnished	870XJFJP-*3 (6)	295	Eng	164				Furnished

CAUTION: Chelsea Recommends the Power Take-Off (PTO) installation on the 3000/4000 Series Transmissions to utilize a Vehicle Interface Module, or Chassis Manufacturers' equivalent controller to incorporate all the PTO control features available, this includes the "PTO Request" and "PTO Enable Output" feature. The "PTO Enable" circuit signals the Transmission Control Module (TCM) to maintain line pressure to the PTO Failure to provide this signal may not be sufficient to the PTO This may cause damage to the PTO and /or Transmission. Please see the Allison Transmission website and individual chassis manufacturer for installation details.

CAUTION: The Torque Rating on Certain Ratios is Restricted by Allison Transmission to a Torque Limit of 685 Ft.lbs on their PTO Drive Gear.

NOTE: The Right Side opening is located at approximately 1 o'clock when viewed from the rear. All PTOs mounted in this location require pressure lubrication.

NOTE: Do not use Geared Adapter Assemblies on Allison 3000/4000 Series Automatic Transmissions.

NOTE: All models require a hose assembly. For the 267 Series, use 329130-1X for left side, 329130-6X for top right and 329130-4X for right side. THESE HOSE ASSEMBLIES MUST BE ORDERED SEPARATELY. For 280, 870/877 and 890/897 Series - All Mounting Hardware and Hose Assemblies are Included with the Unit.

NOTE: The 267 Series is not available in the 3 arrangement with an "XK" output due to interference with the pressure lube fitting.

NOTE: The 3700 and MD3070 have PTO Availability on the Left-Side Only. The Right-Side is Utilized by OE Equipment. The Transfer Case is Integral to the Transmission

NOTE: 280 and 870 Family of PTOs stated Torque is for Intermittent and Continuous Duty Applications.

(6) Input Gear Part No. 5-P-1428
(7) Input Gear Part No. 5-P-1491

Parker Hannifin Corporation
Chelsea Products Division
Olive Branch, MS 38654 USA

4700
4700 EVS
4700 OFS
4700 RDS
4700 SP
4800
4800 EVS
4800 SP
4850 EVS

LEFT SIDE ONLY

TRANSMISSION GEAR DATA:
L.S. 10-BOLT Opening Gear FORWARD of Centerline
97 Teeth - L.H. HELIX

PITCH LINE TO APERTURE FACE:
1.7799" (45.2100MM)

TOP SIDE ONLY

TRANSMISSION GEAR DATA:
TOP 10-BOLT Opening Gear FORWARD of Centerline
97 Teeth - L.H. HELIX

PITCH LINE TO APERTURE FACE:
1.7799" (45.2100MM)

Caution: Application Approval Required for PTO Output Shaft Speeds Above 2500 RPM

LEFT Side PTO Model	Inter. Torq.	Dir. Rot.	Engine %		Filler Block	Adapter Assy.	Stud Kit	TOP Side PTO Model	Inter. Torq.	Dir. Rot.	Engine %		Filler Block	Adapter Assy.	Stud Kit
			Fwd.	Rev.							Fwd.	Rev.			
ONE SPEED - TWO GEAR - CONSTANT MESH															
267SBFJP-*5 (4)	402	Eng	103				Furnished	267SBFJP-*3 (4)	402	Eng	103				Furnished
267SDFJP-*5 (3)	390	Eng	123				Furnished	267SDFJP-*3 (4)	390	Eng	123				Furnished
267SGFJP-*5 (2)	360	Eng	147				Furnished	267SGFJP-*3 (2)	360	Eng	147				Furnished
267SMFJP-*5 (5)	318	Eng	184				Furnished	267SMFJP-*3 (5)	318	Eng	184				Furnished
267SSFJP-*5 (1)	265	Eng	229				Furnished	267SSFJP-*3 (1)	265	Eng	229				Furnished
267XBFJP-*5 (8)	335	Eng	103				Furnished	267XBFJP-*3 (8)	335	Eng	103				Furnished
267XDFJP-*5 (9)	325	Eng	123				Furnished	267XDFJP-*3 (9)	325	Eng	123				Furnished
267XGFJP-*5 (10)	300	Eng	147				Furnished	267XGFJP-*3 (10)	300	Eng	147				Furnished
267XMFJP-*5 (11)	265	Eng	184				Furnished	267XMFJP-*3 (11)	265	Eng	184				Furnished
267XSFJP-*5 (1)	250	Eng	229				Furnished	267XSFJP-*3 (1)	250	Eng	229				Furnished
287GBFJP-*5 (7)	300	Eng	85				Furnished	287GBFJP-*3 (7)	300	Eng	85				Furnished
287GBFJP-*8 (7)	300	Eng	81				Furnished	287GBFJP-*8 (7)	300	Eng	81				Furnished
287GCFJP-*5 (7)	390	Eng	103				Furnished	287GCFJP-*3 (7)	390	Eng	103				Furnished
287GCFJP-*8 (7)	390	Eng	97				Furnished	287GCFJP-*8 (7)	390	Eng	97				Furnished
287GDFJP-*5 (7)	390	Eng	123				Furnished	287GDFJP-*3 (7)	390	Eng	123				Furnished
287GDFJP-*8 (7)	390	Eng	116				Furnished	287GDFJP-*8 (7)	390	Eng	116				Furnished
287GGFJP-*5 (7)	360	Eng	147				Furnished	287GGFJP-*3 (7)	360	Eng	147				Furnished
287GGFJP-*8 (7)	360	Eng	137				Furnished	287GGFJP-*8 (7)	360	Eng	137				Furnished
287GKFJP-*5 (7)	340	Eng	164				Furnished	287GKFJP-*3 (7)	340	Eng	164				Furnished
287GMFJP-*5 (7)	318	Eng	184				Furnished	287GMFJP-*3 (7)	318	Eng	184				Furnished
287GMFJP-*8 (7)	318	Eng	170				Furnished	287GMFJP-*8 (7)	318	Eng	170				Furnished
287GPFJP-*5 (7)	290	Eng	205				Furnished	287GPFJP-*3 (7)	290	Eng	205				Furnished
287GPFJP-*8 (7)	290	Eng	189				Furnished	287GPFJP-*8 (7)	290	Eng	189				Furnished
287GSFJP-*5 (7)	265	Eng	229				Furnished	287GSFJP-*3 (7)	265	Eng	229				Furnished
287GSFJP-*8 (7)	265	Eng	210				Furnished	287GSFJP-*8 (7)	265	Eng	210				Furnished
877XAFJP-*5 (6)	591	Eng	116				Furnished	877XAFJP-*3 (6)	591	Eng	116				Furnished
877XBFJP-*5 (6)	552	Eng	124				Furnished	877XBFJP-*3 (6)	552	Eng	124				Furnished
877XCFJP-*5 (6)	515	Eng	133				Furnished	877XCFJP-*3 (6)	515	Eng	133				Furnished
877XDFJP-*5 (6)	482	Eng	142				Furnished	877XDFJP-*3 (6)	482	Eng	142				Furnished
877XEFJP-*5 (6)	425	Eng	161				Furnished	877XEFJP-*3 (6)	425	Eng	161				Furnished
877XFFJP-*5 (6)	376	Eng	182				Furnished	877XFFJP-*3 (6)	376	Eng	182				Furnished

Continued Next Page

CAUTION: Chelsea Recommends the Power Take-Off (PTO) installation on the 3000/4000 Series Transmissions to utilize a Vehicle Interface Module, or Chassis Manufacturers' equivalent controller to incorporate all the PTO control features available, this includes the "PTO Request" and "PTO Enable Output" feature. The "PTO Enable" circuit signals the Transmission Control Module (TCM) to maintain line pressure to the PTO Failure to provide this signal may not be sufficient to the PTO This may cause damage to the PTO and /or Transmission. Please see the Allison Transmission website and individual chassis manufacturer for installation details.

CAUTION: The Torque Rating on Certain Ratios is Restricted by Allison Transmission to a Torque Limit of 685 Ft.lbs on their PTO Drive Gear.

NOTE: The Right Side opening is located at approximately 1 o'clock when viewed from the rear. All PTOs mounted in this location require pressure lubrication.

NOTE: All models require a hose assembly. For the 267 Series, use 329130-1X for left side, 329130-6X for top right and 329130-4X for right side. THESE HOSE ASSEMBLIES MUST BE ORDERED SEPARATELY. For 280, 870/877 and 890/897 Series - All Mounting Hardware and Hose Assemblies are Included with the Unit.

NOTE: The 267 Series is not available in the 3 arrangement with an "XK" output due to interference with the pressure lube fitting.

NOTE: 280, 892 and 870 Series Family of PTOs stated Torque is for Intermittent and Continuous Duty Applications

NOTE: 892/899 SERIES - The combined weight of pump, fittings, and hoses should not exceed 120 Lbs. without required support brackets. Refer to Owner's Manual (HY25-1890-M1/US) for complete details.

NOTE: Do not use Geared Adapter Assemblies on Allison 3000/4000 Series Automatic Transmissions.

(1) Input Gear Part No. 5-P-1173
(2) Input Gear Part No. 5-P-1225
(3) Input Gear Part No. 5-P-1293
(4) Input Gear Part No. 5-P-1350
(5) Input Gear Part No. 5-P-1351
(6) Input Gear Part No. 5-P-1428
(7) Input Gear Part No. 5-P-1491
(8) Input Gear Part No. 5-P-912
(9) Input Gear Part No. 5-P-913
(10) Input Gear Part No. 5-P-914
(11) Input Gear Part No. 5-P-915

Parker Hannifin Corporation
Chelsea Products Division
Olive Branch, MS 38654 USA

4700
4700 EVS
4700 OFS
4700 RDS
4700 SP
4800
4800 EVS
4800 SP
4850 EVS

LEFT SIDE ONLY

TRANSMISSION GEAR DATA:
L.S. 10-BOLT Opening Gear FORWARD of Centerline
97 Teeth - L.H. HELIX

PITCH LINE TO APERTURE FACE:
1.7799" (45.2100MM)

TOP SIDE ONLY

TRANSMISSION GEAR DATA:
TOP 10-BOLT Opening Gear FORWARD of Centerline
97 Teeth - L.H. HELIX

PITCH LINE TO APERTURE FACE:
1.7799" (45.2100MM)

Caution: Application Approval Required for PTO Output Shaft Speeds Above 2500 RPM

LEFT Side PTO Model	Inter. Torq.	Dir. Rot.	Engine % Fwd.	Engine % Rev.	Filler Block	Adapter Assy.	Stud Kit	TOP Side PTO Model	Inter. Torq.	Dir. Rot.	Engine % Fwd.	Engine % Rev.	Filler Block	Adapter Assy.	Stud Kit
ONE SPEED - TWO GEAR - POWERSHIFT (HYDRAULIC)															
280GBFJP-*5 (7)	300	Eng	85				Furnished	280GBFJP-*5 (7)	300	Eng	85				Furnished
280GBFJP-*8 (7)	300	Eng	81				Furnished	280GBFJP-*8 (7)	300	Eng	81				Furnished
280GCFJP-*5 (7)	390	Eng	103				Furnished	280GCFJP-*5 (7)	390	Eng	103				Furnished
280GCFJP-*8 (7)	390	Eng	97				Furnished	280GCFJP-*8 (7)	390	Eng	97				Furnished
280GDFJP-*5 (7)	390	Eng	123				Furnished	280GDFJP-*5 (7)	390	Eng	123				Furnished
280GDFJP-*8 (7)	390	Eng	116				Furnished	280GDFJP-*8 (7)	390	Eng	116				Furnished
280GGFJP-*5 (7)	360	Eng	147				Furnished	280GGFJP-*5 (7)	360	Eng	147				Furnished
280GGFJP-*8 (7)	360	Eng	137				Furnished	280GGFJP-*8 (7)	360	Eng	137				Furnished
280GKFJP-*5 (7)	340	Eng	164				Furnished	280GKFJP-*5 (7)	340	Eng	164				Furnished
280GMFJP-*5 (7)	318	Eng	184				Furnished	280GMFJP-*5 (7)	318	Eng	184				Furnished
280GMFJP-*8 (7)	318	Eng	170				Furnished	280GMFJP-*8 (7)	318	Eng	170				Furnished
280GPFJP-*5 (7)	290	Eng	205				Furnished	280GPFJP-*5 (7)	290	Eng	205				Furnished
280GPFJP-*8 (7)	290	Eng	189				Furnished	280GPFJP-*8 (7)	290	Eng	189				Furnished
280GSFJP-*5 (7)	265	Eng	229				Furnished	280GSFJP-*5 (7)	265	Eng	229				Furnished
280GSFJP-*8 (7)	265	Eng	210				Furnished	280GSFJP-*8 (7)	265	Eng	210				Furnished
870XAFJP-*5 (6)	591	Eng	116				Furnished	870XAFJP-*3 (6)	591	Eng	116				Furnished
870XBFJP-*5 (6)	552	Eng	124				Furnished	870XBFJP-*3 (6)	552	Eng	124				Furnished
870XCFJP-*5 (6)	515	Eng	133				Furnished	870XCFJP-*3 (6)	515	Eng	133				Furnished
870XDFJP-*5 (6)	482	Eng	142				Furnished	870XDFJP-*3 (6)	482	Eng	142				Furnished
870XEFJP-*5 (6)	425	Eng	161				Furnished	870XEFJP-*3 (6)	425	Eng	161				Furnished
870XFFJP-*5 (6)	376	Eng	182				Furnished	870XFFJP-*3 (6)	376	Eng	182				Furnished
ONE SPEED - POWERSHIFT (HYDRAULIC) EXTENDED SHAFT															
892HAFJW-*5 (6)	591	Eng	116				Furnished	892UAFJW-*5 (6)	591	Eng	116				Furnished
892HBFJW-*5 (6)	552	Eng	124				Furnished	892UBFJW-*5 (6)	552	Eng	124				Furnished
892HCFJW-*5 (6)	515	Eng	133				Furnished	892UCFJW-*5 (6)	515	Eng	133				Furnished
892HDFJW-*5 (6)	482	Eng	142				Furnished	892UDFJW-*5 (6)	482	Eng	142				Furnished
892HEFJW-*5 (6)	425	Eng	161				Furnished	892UEFJW-*5 (6)	425	Eng	161				Furnished
892HFFJW-*5 (6)	376	Eng	182				Furnished	892UFFJW-*5 (6)	376	Eng	182				Furnished
ONE SPEED - CONSTANT MESH EXTENDED SHAFT															
899HAFJW-*5 (6)	591	Eng	116				Furnished	899UAFJW-*5 (6)	591	Eng	116				Furnished

Continued Next Page

CAUTION: Chelsea Recommends the Power Take-Off (PTO) installation on the 3000/4000 Series Transmissions to utilize a Vehicle Interface Module, or Chassis Manufacturers' equivalent controller to incorporate all the PTO control features available, this includes the "PTO Request" and "PTO Enable Output" feature. The "PTO Enable" circuit signals the Transmission Control Module (TCM) to maintain line pressure to the PTO Failure to provide this signal may not be sufficient to the PTO This may cause damage to the PTO and /or Transmission. Please see the Allison Transmission website and individual chassis manufacturer for installation details.

CAUTION: The Torque Rating on Certain Ratios is Restricted by Allison Transmission to a Torque Limit of 685 Ft.lbs on their PTO Drive Gear.

NOTE: The Right Side opening is located at approximately 1 o'clock when viewed from the rear. All PTOs mounted in this location require pressure lubrication.

NOTE: All models require a hose assembly. For the 267 Series, use 329130-1X for left side, 329130-6X for top right and 329130-4X for right side. THESE HOSE ASSEMBLIES MUST BE ORDERED SEPARATELY. For 280, 870/877 and 890/897 Series - All Mounting Hardware and Hose Assemblies are Included with the Unit.

NOTE: The 267 Series is not available in the 3 arrangement with an "XK" output due to interference with the pressure lube fitting.

NOTE: 280, 892 and 870 Series Family of PTOs stated Torque is for Intermittent and Continuous Duty Applications

NOTE: 892/899 SERIES - The combined weight of pump, fittings, and hoses should not exceed 120 Lbs. without required support brackets. Refer to Owner's Manual (HY25-1890-M1/US) for complete details.

NOTE: Do not use Geared Adapter Assemblies on Allison 3000/4000 Series Automatic Transmissions.

(6) Input Gear Part No. 5-P-1428
(7) Input Gear Part No. 5-P-1491

Parker Hannifin Corporation
Chelsea Products Division
Olive Branch, MS 38654 USA

4700
4700 EVS
4700 OFS
4700 RDS
4700 SP
4800
4800 EVS
4800 SP
4850 EVS

LEFT SIDE ONLY

TRANSMISSION GEAR DATA:
L.S. 10-BOLT Opening Gear FORWARD of Centerline
97 Teeth - L.H. HELIX

PITCH LINE TO APERTURE FACE:
1.7799" (45.2100MM)

TOP SIDE ONLY

TRANSMISSION GEAR DATA:
TOP 10-BOLT Opening Gear FORWARD of Centerline
97 Teeth - L.H. HELIX

PITCH LINE TO APERTURE FACE:
1.7799" (45.2100MM)

Caution: Application Approval Required for PTO Output Shaft Speeds Above 2500 RPM

LEFT Side PTO Model	Inter. Torq.	Dir. Rot.	Engine % Fwd.	Engine % Rev.	Filler Block	Adapter Assy.	Stud Kit	TOP Side PTO Model	Inter. Torq.	Dir. Rot.	Engine % Fwd.	Engine % Rev.	Filler Block	Adapter Assy.	Stud Kit
ONE SPEED - CONSTANT MESH EXTENDED SHAFT															
899HBFJW-*5 (6)	552	Eng	124				Furnished	899UBFJW-*5 (6)	552	Eng	124				Furnished
899HCFJW-*5 (6)	515	Eng	133				Furnished	899UCFJW-*5 (6)	515	Eng	133				Furnished
899HDFJW-*5 (6)	482	Eng	142				Furnished	899UDFJW-*5 (6)	482	Eng	142				Furnished
899HEFJW-*5 (6)	425	Eng	161				Furnished	899UEFJW-*5 (6)	425	Eng	161				Furnished
899HFFJW-*5 (6)	376	Eng	182				Furnished	899UFFJW-*5 (6)	376	Eng	182				Furnished

CAUTION: Chelsea Recommends the Power Take-Off (PTO) installation on the 3000/4000 Series Transmissions to utilize a Vehicle Interface Module, or Chassis Manufacturers' equivalent controller to incorporate all the PTO control features available, this includes the "PTO Request" and "PTO Enable Output" feature. The "PTO Enable" circuit signals the Transmission Control Module (TCM) to maintain line pressure to the PTO Failure to provide this signal may not be sufficient to the PTO This may cause damage to the PTO and /or Transmission. Please see the Allison Transmission website and individual chassis manufacturer for installation details.

CAUTION: The Torque Rating on Certain Ratios is Restricted by Allison Transmission to a Torque Limit of 685 Ft.lbs on their PTO Drive Gear.

NOTE: The Right Side opening is located at approximately 1 o'clock when viewed from the rear. All PTOs mounted in this location require pressure lubrication.

NOTE: All models require a hose assembly. For the 267 Series, use 329130-1X for left side, 329130-6X for top right and 329130-4X for right side. THESE HOSE ASSEMBLIES MUST BE ORDERED SEPARATELY. For 280, 870/877 and 890/897 Series - All Mounting Hardware and Hose Assemblies are Included with the Unit.

NOTE: The 267 Series is not available in the 3 arrangement with an "XK" output due to interference with the pressure lube fitting.

NOTE: 280, 892 and 870 Series Family of PTOs stated Torque is for Intermittent and Continuous Duty Applications

NOTE: 892/899 SERIES - The combined weight of pump, fittings, and hoses should not exceed 120 Lbs. without required support brackets. Refer to Owner's Manual (HY25-1890-M1/US) for complete details.

NOTE: Do not use Geared Adapter Assemblies on Allison 3000/4000 Series Automatic Transmissions.

(6) Input Gear Part No. 5-P-1428

Allison

Parker Hannifin Corporation
Chelsea Products Division
Olive Branch, MS 38654 USA

4700 (4700 Family w/ Integral Cooler)
4800 (4800 Family w/ Integral Cooler)

LEFT SIDE ONLY

TRANSMISSION GEAR DATA:
L.S. 10-BOLT Opening Gear FORWARD of Centerline
97 Teeth - L.H. HELIX

PITCH LINE TO APERTURE FACE:
1.7799" (45.2100MM)

TOP SIDE ONLY

TRANSMISSION GEAR DATA:
TOP 10-BOLT Opening Gear FORWARD of Centerline
97 Teeth - L.H. HELIX

PITCH LINE TO APERTURE FACE:
1.7799" (45.2100MM)

Caution: Application Approval Required for PTO Output Shaft Speeds Above 2500 RPM

ONE SPEED - TWO GEAR - CONSTANT MESH

LEFT Side PTO Model	Inter. Torq.	Dir. Rot.	Engine % Fwd.	Engine % Rev.	Filler Block	Adapter Assy.	Stud Kit	TOP Side PTO Model	Inter. Torq.	Dir. Rot.	Engine % Fwd.	Engine % Rev.	Filler Block	Adapter Assy.	Stud Kit
267SBFJP-*5 (4)	402	Eng	103				Furnished	267SBFJP-*3 (3)	402	Eng	103				Furnished
267SDFJP-*5 (3)	390	Eng	123				Furnished	267SDFJP-*3 (4)	390	Eng	123				Furnished
267SGFJP-*5 (2)	360	Eng	147				Furnished	267SGFJP-*3 (2)	360	Eng	147				Furnished
267SMFJP-*5 (5)	318	Eng	184				Furnished	267SMFJP-*3 (5)	318	Eng	184				Furnished
267SSFJP-*5 (1)	265	Eng	229				Furnished	267SSFJP-*3 (1)	265	Eng	229				Furnished
267XBFJP-*5 (8)	335	Eng	103				Furnished	267XBFJP-*3 (8)	335	Eng	103				Furnished
267XDFJP-*5 (9)	325	Eng	123				Furnished	267XDFJP-*3 (9)	325	Eng	123				Furnished
267XGFJP-*5 (10)	300	Eng	147				Furnished	267XGFJP-*3 (10)	300	Eng	147				Furnished
267XMFJP-*5 (11)	265	Eng	184				Furnished	267XMFJP-*3 (11)	265	Eng	184				Furnished
267XSFJP-*5 (1)	250	Eng	229				Furnished	267XSFJP-*3 (1)	250	Eng	229				Furnished
287GBFJP-*5 (7)	300	Eng	85				Furnished	287GBFJP-*3 (7)	300	Eng	85				Furnished
287GBFJP-*8 (7)	300	Eng	81				Furnished	287GBFJP-*8 (7)	300	Eng	81				Furnished
287GCFJP-*5 (7)	390	Eng	103				Furnished	287GCFJP-*3 (7)	390	Eng	103				Furnished
287GCFJP-*8 (7)	390	Eng	97				Furnished	287GCFJP-*8 (7)	390	Eng	97				Furnished
287GDFJP-*5 (7)	390	Eng	123				Furnished	287GDFJP-*3 (7)	390	Eng	123				Furnished
287GDFJP-*8 (7)	390	Eng	116				Furnished	287GDFJP-*8 (7)	390	Eng	116				Furnished
287GGFJP-*5 (7)	360	Eng	147				Furnished	287GGFJP-*3 (7)	360	Eng	147				Furnished
287GGFJP-*8 (7)	360	Eng	137				Furnished	287GGFJP-*8 (7)	360	Eng	137				Furnished
287GKFJP-*5 (7)	340	Eng	164				Furnished	287GKFJP-*3 (7)	340	Eng	164				Furnished
287GMFJP-*5 (7)	318	Eng	184				Furnished	287GMFJP-*3 (7)	318	Eng	184				Furnished
287GMFJP-*8 (7)	318	Eng	170				Furnished	287GMFJP-*8 (7)	318	Eng	170				Furnished
287GPFJP-*5 (7)	290	Eng	205				Furnished	287GPFJP-*3 (7)	290	Eng	205				Furnished
287GPFJP-*8 (7)	290	Eng	189				Furnished	287GPFJP-*8 (7)	290	Eng	189				Furnished
287GSFJP-*5 (7)	265	Eng	229				Furnished	287GSFJP-*3 (7)	265	Eng	229				Furnished
287GSFJP-*8 (7)	265	Eng	210				Furnished	287GSFJP-*8 (7)	265	Eng	210				Furnished
877XAFJP-*5 (6)	591	Eng	116				Furnished	877XAFJP-*3 (6)	591	Eng	116				Furnished
877XBFJP-*5 (6)	552	Eng	124				Furnished	877XBFJP-*3 (6)	552	Eng	124				Furnished
877XCFJP-*5 (6)	515	Eng	133				Furnished	877XCFJP-*3 (6)	515	Eng	133				Furnished
877XDFJP-*5 (6)	482	Eng	142				Furnished	877XDFJP-*3 (6)	482	Eng	142				Furnished
877XEFJP-*5 (6)	425	Eng	161				Furnished	877XEFJP-*3 (6)	425	Eng	161				Furnished
877XFFJP-*5 (6)	376	Eng	182				Furnished	877XFFJP-*3 (6)	376	Eng	182				Furnished

Continued Next Page

CAUTION: Chelsea Recommends the Power Take-Off (PTO) installation on the 3000/4000 Series Transmissions to utilize a Vehicle Interface Module, or Chassis Manufacturers' equivalent controller to incorporate all the PTO control features available, this includes the "PTO Request" and "PTO Enable Output" feature. The "PTO Enable" circuit signals the Transmission Control Module (TCM) to maintain line pressure to the PTO Failure to provide this signal may not be sufficient to the PTO This may cause damage to the PTO and /or Transmission. Please see the Allison Transmission website and individual chassis manufacturer for installation details.

CAUTION: The Torque Rating on Certain Ratios is Restricted by Allison Transmission to a Torque Limit of 685 Ft.lbs on their PTO Drive Gear.

NOTE: The Right Side opening is located at approximately 1 o'clock when viewed from the rear. All PTOs mounted in this location require pressure lubrication.

NOTE: All models require a hose assembly. For the 267 Series, use 329130-1X for left side, 329130-6X for top right and 329130-4X for right side. THESE HOSE ASSEMBLIES MUST BE ORDERED SEPARATELY. For 280, 870/877 and 890/897 Series - All Mounting Hardware and Hose Assemblies are Included with the Unit.

NOTE: The 267 Series is not available in the 3 arrangement with an "XK" output due to interference with the pressure lube fitting.

NOTE: 280, 892 and 870 Series Family of PTOs stated Torque is for Intermittent and Continuous Duty Applications

NOTE: 892/899 SERIES - The combined weight of pump, fittings, and hoses should not exceed 120 Lbs. without required support brackets. Refer to Owner's Manual (HY25-1890-M1/US) for complete details.

NOTE: Do not use Geared Adapter Assemblies on Allison 3000/4000 Series Automatic Transmissions.

(1) Input Gear Part No. 5-P-1173
(2) Input Gear Part No. 5-P-1225
(3) Input Gear Part No. 5-P-1293
(4) Input Gear Part No. 5-P-1350
(5) Input Gear Part No. 5-P-1351
(6) Input Gear Part No. 5-P-1428
(7) Input Gear Part No. 5-P-1491
(8) Input Gear Part No. 5-P-912
(9) Input Gear Part No. 5-P-913
(10) Input Gear Part No. 5-P-914
(11) Input Gear Part No. 5-P-915

Parker Hannifin Corporation
Chelsea Products Division
Olive Branch, MS 38654 USA

4700 (4700 Family w/ Integral Cooler)
4800 (4800 Family w/ Integral Cooler)

LEFT SIDE ONLY

TRANSMISSION GEAR DATA:
L.S. 10-BOLT Opening Gear FORWARD of Centerline
97 Teeth - L.H. HELIX

PITCH LINE TO APERTURE FACE:
1.7799" (45.2100MM)

TOP SIDE ONLY

TRANSMISSION GEAR DATA:
TOP 10-BOLT Opening Gear FORWARD of Centerline
97 Teeth - L.H. HELIX

PITCH LINE TO APERTURE FACE:
1.7799" (45.2100MM)

Caution: Application Approval Required for PTO Output Shaft Speeds Above 2500 RPM

LEFT Side PTO Model	Inter. Torq.	Dir. Rot.	Engine % Fwd.	Engine % Rev.	Filler Block	Adapter Assy.	Stud Kit	TOP Side PTO Model	Inter. Torq.	Dir. Rot.	Engine % Fwd.	Engine % Rev.	Filler Block	Adapter Assy.	Stud Kit
ONE SPEED - TWO GEAR - POWERSHIFT (HYDRAULIC)															
280GBFJP-*5 (7)	300	Eng	85				Furnished	280GBFJP-*5 (7)	300	Eng	85				Furnished
280GBFJP-*8 (7)	300	Eng	81				Furnished	280GBFJP-*8 (7)	300	Eng	81				Furnished
280GCFJP-*5 (7)	390	Eng	103				Furnished	280GCFJP-*5 (7)	390	Eng	103				Furnished
280GCFJP-*8 (7)	390	Eng	97				Furnished	280GCFJP-*8 (7)	390	Eng	97				Furnished
280GDFJP-*5 (7)	390	Eng	123				Furnished	280GDFJP-*5 (7)	390	Eng	123				Furnished
280GDFJP-*8 (7)	390	Eng	116				Furnished	280GDFJP-*8 (7)	390	Eng	116				Furnished
280GGFJP-*5 (7)	360	Eng	147				Furnished	280GGFJP-*5 (7)	360	Eng	147				Furnished
280GGFJP-*8 (7)	360	Eng	137				Furnished	280GGFJP-*8 (7)	360	Eng	137				Furnished
280GKFJP-*5 (7)	340	Eng	164				Furnished	280GKFJP-*5 (7)	340	Eng	164				Furnished
280GMFJP-*5 (7)	318	Eng	184				Furnished	280GMFJP-*5 (7)	318	Eng	184				Furnished
280GMFJP-*8 (7)	318	Eng	170				Furnished	280GMFJP-*8 (7)	318	Eng	170				Furnished
280GPFJP-*5 (7)	290	Eng	205				Furnished	280GPFJP-*5 (7)	290	Eng	205				Furnished
280GPFJP-*8 (7)	290	Eng	189				Furnished	280GPFJP-*8 (7)	290	Eng	189				Furnished
280GSFJP-*5 (7)	265	Eng	229				Furnished	280GSFJP-*5 (7)	265	Eng	229				Furnished
280GSFJP-*8 (7)	265	Eng	210				Furnished	280GSFJP-*8 (7)	265	Eng	210				Furnished
870XAFJP-*5 (6)	591	Eng	116				Furnished	870XAFJP-*3 (6)	591	Eng	116				Furnished
870XBFJP-*5 (6)	552	Eng	124				Furnished	870XBFJP-*3 (6)	552	Eng	124				Furnished
870XCFJP-*5 (6)	515	Eng	133				Furnished	870XCFJP-*3 (6)	515	Eng	133				Furnished
870XDFJP-*5 (6)	482	Eng	142				Furnished	870XDFJP-*3 (6)	482	Eng	142				Furnished
870XEFJP-*5 (6)	425	Eng	161				Furnished	870XEFJP-*3 (6)	425	Eng	161				Furnished
870XFFJP-*5 (6)	376	Eng	182				Furnished	870XFFJP-*3 (6)	376	Eng	182				Furnished
ONE SPEED - POWERSHIFT (HYDRAULIC) EXTENDED SHAFT															
892CAFJW-*3 (6)	591	Eng	116				Furnished	892UAFJW-*5 (6)	591	Eng	116				Furnished
892CBFJW-*3 (6)	552	Eng	124				Furnished	892UBFJW-*5 (6)	552	Eng	124				Furnished
892CCFJW-*3 (6)	515	Eng	133				Furnished	892UCFJW-*5 (6)	515	Eng	133				Furnished
892CDFJW-*3 (6)	482	Eng	142				Furnished	892UDFJW-*5 (6)	482	Eng	142				Furnished
892CEFJW-*3 (6)	425	Eng	161				Furnished	892UEFJW-*5 (6)	425	Eng	161				Furnished
892CFFJW-*3 (6)	376	Eng	182				Furnished	892UFFJW-*5 (6)	376	Eng	182				Furnished
ONE SPEED - CONSTANT MESH EXTENDED SHAFT															
899CAFJW-*3 (6)	591	Eng	116				Furnished	899UAFJW-*5 (6)	591	Eng	116				Furnished

Continued Next Page

CAUTION: Chelsea Recommends the Power Take-Off (PTO) installation on the 3000/4000 Series Transmissions to utilize a Vehicle Interface Module, or Chassis Manufacturers' equivalent controller to incorporate all the PTO control features available, this includes the "PTO Request" and "PTO Enable Output" feature. The "PTO Enable" circuit signals the Transmission Control Module (TCM) to maintain line pressure to the PTO Failure to provide this signal may not be sufficient to the PTO This may cause damage to the PTO and /or Transmission. Please see the Allison Transmission website and individual chassis manufacturer for installation details.

CAUTION: The Torque Rating on Certain Ratios is Restricted by Allison Transmission to a Torque Limit of 685 Ft.lbs on their PTO Drive Gear.

NOTE: The Right Side opening is located at approximately 1 o'clock when viewed from the rear. All PTOs mounted in this location require pressure lubrication.

NOTE: All models require a hose assembly. For the 267 Series, use 329130-1X for left side, 329130-6X for top right and 329130-4X for right side. THESE HOSE ASSEMBLIES MUST BE ORDERED SEPARATELY. For 280, 870/877 and 890/897 Series - All Mounting Hardware and Hose Assemblies are Included with the Unit.

NOTE: The 267 Series is not available in the 3 arrangement with an "XK" output due to interference with the pressure lube fitting.

NOTE: 280, 892 and 870 Series Family of PTOs stated Torque is for Intermittent and Continuous Duty Applications

NOTE: 892/899 SERIES - The combined weight of pump, fittings, and hoses should not exceed 120 Lbs. without required support brackets. Refer to Owner's Manual (HY25-1890-M1/US) for complete details.

NOTE: Do not use Geared Adapter Assemblies on Allison 3000/4000 Series Automatic Transmissions.

(6) Input Gear Part No. 5-P-1428
(7) Input Gear Part No. 5-P-1491

Parker Hannifin Corporation
Chelsea Products Division
Olive Branch, MS 38654 USA

4700 (4700 Family w/ Integral Cooler)
4800 (4800 Family w/ Integral Cooler)

LEFT SIDE ONLY

TRANSMISSION GEAR DATA:
L.S. 10-BOLT Opening Gear FORWARD of Centerline
97 Teeth - L.H. HELIX

PITCH LINE TO APERTURE FACE:
1.7799" (45.2100MM)

TOP SIDE ONLY

TRANSMISSION GEAR DATA:
TOP 10-BOLT Opening Gear FORWARD of Centerline
97 Teeth - L.H. HELIX

PITCH LINE TO APERTURE FACE:
1.7799" (45.2100MM)

Caution: Application Approval Required for PTO Output Shaft Speeds Above 2500 RPM

LEFT Side PTO Model	Inter. Torq.	Dir. Rot.	Engine %		Filler Block	Adapter Assy.	Stud Kit	TOP Side PTO Model	Inter. Torq.	Dir. Rot.	Engine %		Filler Block	Adapter Assy.	Stud Kit
			Fwd.	Rev.							Fwd.	Rev.			
ONE SPEED - CONSTANT MESH EXTENDED SHAFT															
899CBFJW-*3 (6)	552	Eng	124				Furnished	899UBFJW-*5 (6)	552	Eng	124				Furnished
899CCFJW-*3 (6)	515	Eng	133				Furnished	899UCFJW-*5 (6)	515	Eng	133				Furnished
899CDFJW-*3 (6)	482	Eng	142				Furnished	899UDFJW-*5 (6)	482	Eng	142				Furnished
899CEFJW-*3 (6)	425	Eng	161				Furnished	899UEFJW-*5 (6)	425	Eng	161				Furnished
899CFFJW-*3 (6)	376	Eng	182				Furnished	899UFFJW-*5 (6)	376	Eng	182				Furnished

CAUTION: Chelsea Recommends the Power Take-Off (PTO) installation on the 3000/4000 Series Transmissions to utilize a Vehicle Interface Module, or Chassis Manufacturers' equivalent controller to incorporate all the PTO control features available, this includes the "PTO Request" and "PTO Enable Output" feature. The "PTO Enable" circuit signals the Transmission Control Module (TCM) to maintain line pressure to the PTO Failure to provide this signal may not be sufficient to the PTO This may cause damage to the PTO and /or Transmission. Please see the Allison Transmission website and individual chassis manufacturer for installation details.

CAUTION: The Torque Rating on Certain Ratios is Restricted by Allison Transmission to a Torque Limit of 685 Ft.lbs on their PTO Drive Gear.

NOTE: The Right Side opening is located at approximately 1 o'clock when viewed from the rear. All PTOs mounted in this location require pressure lubrication.

NOTE: All models require a hose assembly. For the 267 Series, use 329130-1X for left side, 329130-6X for top right and 329130-4X for right side. THESE HOSE ASSEMBLIES MUST BE ORDERED SEPARATELY. For 280, 870/877 and 890/897 Series - All Mounting Hardware and Hose Assemblies are Included with the Unit.

NOTE: The 267 Series is not available in the 3 arrangement with an "XK" output due to interference with the pressure lube fitting.

NOTE: 280, 892 and 870 Series Family of PTOs stated Torque is for Intermittent and Continuous Duty Applications

NOTE: 892/899 SERIES - The combined weight of pump, fittings, and hoses should not exceed 120 Lbs. without required support brackets. Refer to Owner's Manual (HY25-1890-M1/US) for complete details.

NOTE: Do not use Geared Adapter Assemblies on Allison 3000/4000 Series Automatic Transmissions.

(6) Input Gear Part No. 5-P-1428

Allison

Parker Hannifin Corporation
Chelsea Products Division
Olive Branch, MS 38654 USA

4700 (4700 Family w/ Retarder)
4800 (4800 Family w/ Retarder)

LEFT SIDE ONLY

TRANSMISSION GEAR DATA:
L.S. 10-BOLT Opening Gear FORWARD of Centerline
97 Teeth - L.H. HELIX

PITCH LINE TO APERTURE FACE:
1.7799" (45.2100MM)

Caution: Application Approval Required for PTO Output Shaft Speeds Above 2500 RPM

LEFT Side PTO Model	Inter. Torq.	Dir. Rot.	Engine %		Filler Block	Adapter Assy.	Stud Kit		Inter. Torq.	Dir. Rot.	Engine %		Filler Block	Adapter Assy.	Stud Kit
			Fwd.	Rev.							Fwd.	Rev.			
ONE SPEED - TWO GEAR - CONSTANT MESH															
267SBFJP-*5 (4)	402	Eng	103				Furnished								
267SDFJP-*5 (3)	390	Eng	123				Furnished								
267SGFJP-*5 (2)	360	Eng	147				Furnished								
267SMFJP-*5 (5)	318	Eng	184				Furnished								
267SSFJP-*5 (1)	265	Eng	229				Furnished								
267XBFJP-*5 (8)	335	Eng	103				Furnished								
267XDFJP-*5 (9)	325	Eng	123				Furnished								
267XGFJP-*5 (10)	300	Eng	147				Furnished								
267XMFJP-*5 (11)	265	Eng	184				Furnished								
267XSFJP-*5 (1)	250	Eng	229				Furnished								
287GBFJP-*5 (7)	300	Eng	85				Furnished								
287GBFJP-*8 (7)	300	Eng	81				Furnished								
287GCFJP-*5 (7)	390	Eng	103				Furnished								
287GCFJP-*8 (7)	390	Eng	97				Furnished								
287GDFJP-*5 (7)	390	Eng	123				Furnished								
287GDFJP-*8 (7)	390	Eng	116				Furnished								
287GGFJP-*5 (7)	360	Eng	147				Furnished								
287GGFJP-*8 (7)	360	Eng	137				Furnished								
287GKFJP-*5 (7)	340	Eng	164				Furnished								
287GMFJP-*5 (7)	318	Eng	184				Furnished								
287GMFJP-*8 (7)	318	Eng	170				Furnished								
287GPFJP-*5 (7)	290	Eng	205				Furnished								
287GPFJP-*8 (7)	290	Eng	189				Furnished								
287GSFJP-*5 (7)	265	Eng	229				Furnished								
287GSFJP-*8 (7)	265	Eng	210				Furnished								
877XAFJP-*5 (6)	591	Eng	116				Furnished								
877XBFJP-*5 (6)	552	Eng	124				Furnished								
877XCFJP-*5 (6)	515	Eng	133				Furnished								
877XDFJP-*5 (6)	482	Eng	142				Furnished								
877XEFJP-*5 (6)	425	Eng	161				Furnished								
877XFFJP-*5 (6)	376	Eng	182				Furnished								

Continued Next Page

CAUTION: Chelsea Recommends the Power Take-Off (PTO) installation on the 3000/4000 Series Transmissions to utilize a Vehicle Interface Module, or Chassis Manufacturers' equivalent controller to incorporate all the PTO control features available, this includes the "PTO Request" and "PTO Enable Output" feature. The "PTO Enable" circuit signals the Transmission Control Module (TCM) to maintain line pressure to the PTO Failure to provide this signal may not be sufficient to the PTO This may cause damage to the PTO and /or Transmission. Please see the Allison Transmission website and individual chassis manufacturer for installation details.

CAUTION: The Torque Rating on Certain Ratios is Restricted by Allison Transmission to a Torque Limit of 685 Ft.lbs on their PTO Drive Gear.

NOTE: The Right Side opening is located at approximately 1 o'clock when viewed from the rear. All PTOs mounted in this location require pressure lubrication.

NOTE: All models require a hose assembly. For the 267 Series, use 329130-1X for left side, 329130-6X for top right and 329130-4X for right side. THESE HOSE ASSEMBLIES MUST BE ORDERED SEPARATELY. For 280, 870/877 and 890/897 Series - All Mounting Hardware and Hose Assemblies are Included with the Unit.

NOTE: The 267 Series is not available in the 3 arrangement with an "XK" output due to interference with the pressure lube fitting.

NOTE: 280, 892 and 870 Series Family of PTOs stated Torque is for Intermittent and Continuous Duty Applications

NOTE: 892/899 SERIES - The combined weight of pump, fittings, and hoses should not exceed 120 Lbs. without required support brackets. Refer to Owner's Manual (HY25-1890-M1/US) for complete details.

NOTE: Do not use Geared Adapter Assemblies on Allison 3000/4000 Series Automatic Transmissions.

(1) Input Gear Part No. 5-P-1173
(2) Input Gear Part No. 5-P-1225
(3) Input Gear Part No. 5-P-1293
(4) Input Gear Part No. 5-P-1350
(5) Input Gear Part No. 5-P-1351
(6) Input Gear Part No. 5-P-1428
(7) Input Gear Part No. 5-P-1491
(8) Input Gear Part No. 5-P-912
(9) Input Gear Part No. 5-P-913
(10) Input Gear Part No. 5-P-914
(11) Input Gear Part No. 5-P-915

Parker Hannifin Corporation
Chelsea Products Division
Olive Branch, MS 38654 USA

4700 (4700 Family w/ Retarder)
4800 (4800 Family w/ Retarder)

LEFT SIDE ONLY

TRANSMISSION GEAR DATA:
L.S. 10-BOLT Opening Gear FORWARD of Centerline
97 Teeth - L.H. HELIX

PITCH LINE TO APERTURE FACE:
1.7799" (45.2100MM)

Caution: Application Approval Required for PTO Output Shaft Speeds Above 2500 RPM

LEFT Side PTO Model	Inter. Torq.	Dir. Rot.	Engine % Fwd.	Engine % Rev.	Filler Block	Adapter Assy.	Stud Kit		Inter. Torq.	Dir. Rot.	Engine % Fwd.	Engine % Rev.	Filler Block	Adapter Assy.	Stud Kit
ONE SPEED - TWO GEAR - POWERSHIFT (HYDRAULIC)															
280GBFJP-*5 (7)	300	Eng	85				Furnished								
280GBFJP-*8 (7)	300	Eng	81				Furnished								
280GCFJP-*5 (7)	390	Eng	103				Furnished								
280GCFJP-*8 (7)	390	Eng	97				Furnished								
280GDFJP-*5 (7)	390	Eng	123				Furnished								
280GDFJP-*8 (7)	390	Eng	116				Furnished								
280GGFJP-*5 (7)	360	Eng	147				Furnished								
280GGFJP-*8 (7)	360	Eng	137				Furnished								
280GKFJP-*5 (7)	340	Eng	164				Furnished								
280GMFJP-*5 (7)	318	Eng	184				Furnished								
280GPFJP-*5 (7)	290	Eng	205				Furnished								
280GPFJP-*8 (7)	290	Eng	189				Furnished								
280GSFJP-*5 (7)	265	Eng	229				Furnished								
280GSFJP-*8 (7)	265	Eng	210				Furnished								
870XAFJP-*5 (6)	591	Eng	116				Furnished								
870XBFJP-*5 (6)	552	Eng	124				Furnished								
870XCFJP-*5 (6)	515	Eng	133				Furnished								
870XDFJP-*5 (6)	482	Eng	142				Furnished								
870XEFJP-*5 (6)	425	Eng	161				Furnished								
870XFFJP-*5 (6)	376	Eng	182				Furnished								
ONE SPEED - POWERSHIFT (HYDRAULIC) EXTENDED SHAFT															
892JAFJW-*3 (6)	591	Eng	116				Furnished								
892JBFJW-*3 (6)	552	Eng	124				Furnished								
892JCFJW-*3 (6)	515	Eng	133				Furnished								
892JDFJW-*3 (6)	482	Eng	142				Furnished								
892JEFJW-*3 (6)	425	Eng	161				Furnished								
892JFFJW-*3 (6)	376	Eng	182				Furnished								
ONE SPEED - CONSTANT MESH EXTENDED SHAFT															
899JAFJW-*3 (6)	591	Eng	116				Furnished								
899JBFJW-*3 (6)	552	Eng	124				Furnished								

Continued Next Page

CAUTION: Chelsea Recommends the Power Take-Off (PTO) installation on the 3000/4000 Series Transmissions to utilize a Vehicle Interface Module, or Chassis Manufacturers' equivalent controller to incorporate all the PTO control features available, this includes the "PTO Request" and "PTO Enable Output" feature. The "PTO Enable" circuit signals the Transmission Control Module (TCM) to maintain line pressure to the PTO Failure to provide this signal may not be sufficient to the PTO This may cause damage to the PTO and /or Transmission. Please see the Allison Transmission website and individual chassis manufacturer for installation details.

CAUTION: The Torque Rating on Certain Ratios is Restricted by Allison Transmission to a Torque Limit of 685 Ft.lbs on their PTO Drive Gear.

NOTE: The Right Side opening is located at approximately 1 o'clock when viewed from the rear. All PTOs mounted in this location require pressure lubrication.

NOTE: All models require a hose assembly. For the 267 Series, use 329130-1X for left side, 329130-6X for top right and 329130-4X for right side. THESE HOSE ASSEMBLIES MUST BE ORDERED SEPARATELY. For 280, 870/877 and 890/897 Series - All Mounting Hardware and Hose Assemblies are Included with the Unit.

NOTE: The 267 Series is not available in the 3 arrangement with an "XK" output due to interference with the pressure lube fitting.

NOTE: 280, 892 and 870 Series Family of PTOs stated Torque is for Intermittent and Continuous Duty Applications

NOTE: 892/899 SERIES - The combined weight of pump, fittings, and hoses should not exceed 120 Lbs. without required support brackets. Refer to Owner's Manual (HY25-1890-M1/US) for complete details.

NOTE: Do not use Geared Adapter Assemblies on Allison 3000/4000 Series Automatic Transmissions.

(6) Input Gear Part No. 5-P-1428
(7) Input Gear Part No. 5-P-1491

Parker Hannifin Corporation
Chelsea Products Division
Olive Branch, MS 38654 USA

4700 (4700 Family w/ Retarder)
4800 (4800 Family w/ Retarder)

LEFT SIDE ONLY

TRANSMISSION GEAR DATA:
L.S. 10-BOLT Opening Gear FORWARD of Centerline
97 Teeth - L.H. HELIX

PITCH LINE TO APERTURE FACE:
1.7799" (45.2100MM)

Caution: Application Approval Required for PTO Output Shaft Speeds Above 2500 RPM

LEFT Side PTO Model	Inter. Torq.	Dir. Rot.	Engine %		Filler Block	Adapter Assy.	Stud Kit		Inter. Torq.	Dir. Rot.	Engine %		Filler Block	Adapter Assy.	Stud Kit
			Fwd.	Rev.							Fwd.	Rev.			
ONE SPEED - CONSTANT MESH EXTENDED SHAFT															
899JCFJW-*3 (6)	515	Eng	133				Furnished								
899JDFJW-*3 (6)	482	Eng	142				Furnished								
899JEFJW-*3 (6)	425	Eng	161				Furnished								
899JFFJW-*3 (6)	376	Eng	182				Furnished								

CAUTION: Chelsea Recommends the Power Take-Off (PTO) installation on the 3000/4000 Series Transmissions to utilize a Vehicle Interface Module, or Chassis Manufacturers' equivalent controller to incorporate all the PTO control features available, this includes the "PTO Request" and "PTO Enable Output" feature. The "PTO Enable" circuit signals the Transmission Control Module (TCM) to maintain line pressure to the PTO Failure to provide this signal may not be sufficient to the PTO This may cause damage to the PTO and /or Transmission. Please see the Allison Transmission website and individual chassis manufacturer for installation details.

CAUTION: The Torque Rating on Certain Ratios is Restricted by Allison Transmission to a Torque Limit of 685 Ft.lbs on their PTO Drive Gear.

NOTE: The Right Side opening is located at approximately 1 o'clock when viewed from the rear. All PTOs mounted in this location require pressure lubrication.

NOTE: All models require a hose assembly. For the 267 Series, use 329130-1X for left side, 329130-6X for top right and 329130-4X for right side. THESE HOSE ASSEMBLIES MUST BE ORDERED SEPARATELY. For 280, 870/877 and 890/897 Series - All Mounting Hardware and Hose Assemblies are Included with the Unit.

NOTE: The 267 Series is not available in the 3 arrangement with an "XK" output due to interference with the pressure lube fitting.

NOTE: 280, 892 and 870 Series Family of PTOs stated Torque is for Intermittent and Continuous Duty Applications

NOTE: 892/899 SERIES - The combined weight of pump, fittings, and hoses should not exceed 120 Lbs. without required support brackets. Refer to Owner's Manual (HY25-1890-M1/US) for complete details.

NOTE: Do not use Geared Adapter Assemblies on Allison 3000/4000 Series Automatic Transmissions.

(6) Input Gear Part No. 5-P-1428

Allison

Parker Hannifin Corporation
Chelsea Products Division
Olive Branch, MS 38654 USA

TC-10

REAR SIDE ONLY

TRANSMISSION GEAR DATA:
REAR 04-BOLT Opening

PITCH LINE TO APERTURE FACE:

Caution: Application Approval Required for PTO Output Shaft Speeds Above 2500 RPM

REAR Side PTO Model	Inter. Torq.	Dir. Rot.	Engine %		Filler Block	Adapter Assy.	Stud Kit		Inter. Torq.	Dir. Rot.	Engine %		Filler Block	Adapter Assy.	Stud Kit
			Fwd.	Rev.							Fwd.	Rev.			

REAR MOUNT - POWERSHIFT (HYDRAULIC)

590XRFJW-*X	650	Eng	128			Furnished

NOTE: The PTO Provision is optional for the TC10. All TC10 Transmissions have a PTO pad and cover located on the rear cover. The TC10 includes the PTO drive shaft if the PTO option is ordered with the transmission. If the transmission does not have optional PTO provision, the PTO adapter can be added (Contact Allison)

NOTE: For all PTO installations, the Allison 5th Generation Controls' PTO Drive Interface must be integrated into the installation of the PTO control.

Parker Hannifin Corporation
Chelsea Products Division
Olive Branch, MS 38654 USA

NOTES



Allison

Parker Hannifin Corporation
Chelsea Products Division
Olive Branch, MS 38654 USA

CATERPILLAR

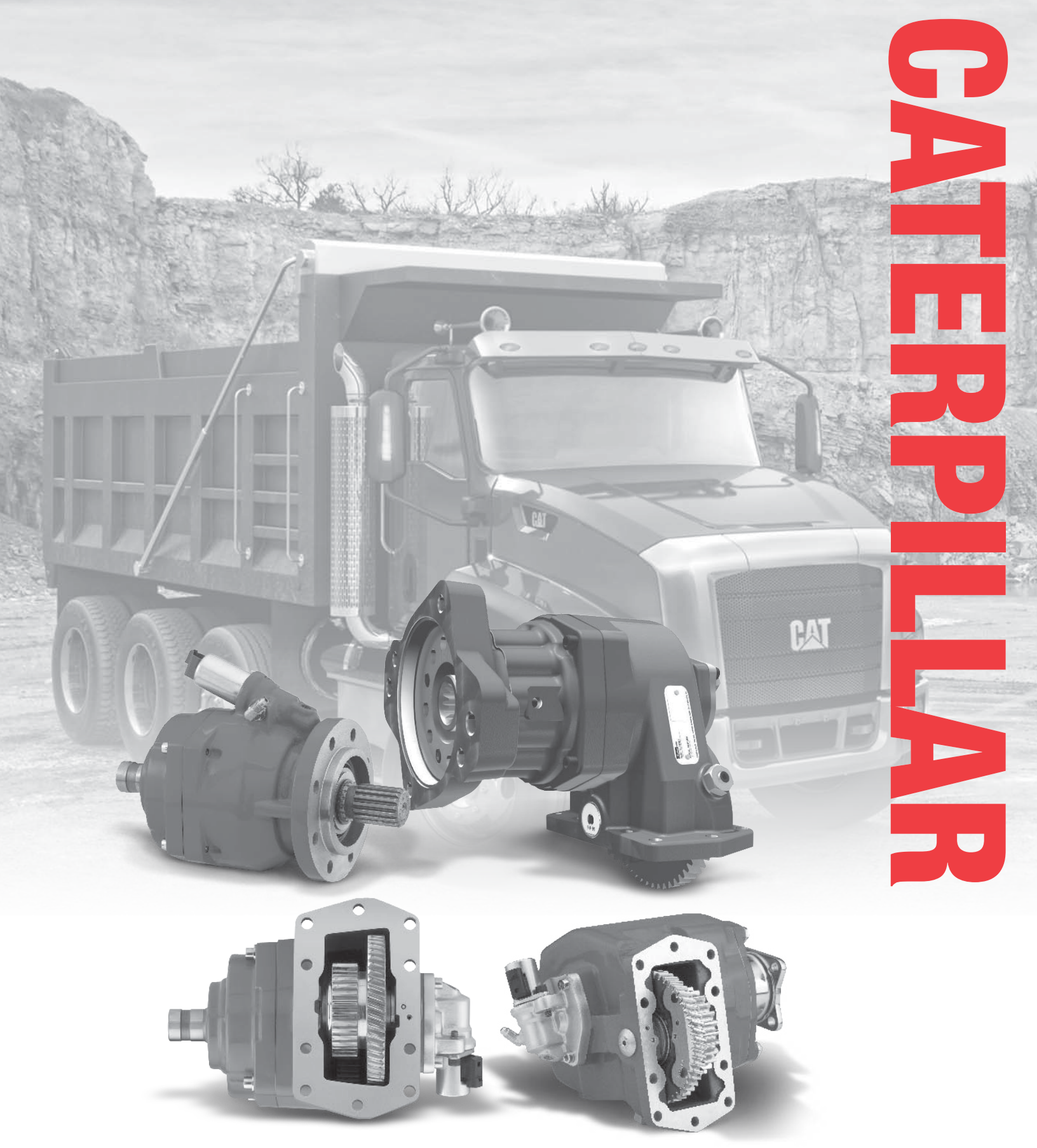

Parker Chelsea

ENGINEERING YOUR SUCCESS.

Caterpillar

⚠ WARNING — User Responsibility

FAILURE OR IMPROPER SELECTION OR IMPROPER USE OF THE PRODUCTS DESCRIBED HEREIN OR RELATED ITEMS CAN CAUSE DEATH, PERSONAL INJURY AND PROPERTY DAMAGE.

This document and other information from Parker-Hannifin Corporation, its subsidiaries and authorized distributors provide product or system options for further investigation by users having technical expertise.

The user, through its own analysis and testing, is solely responsible for making the final selection of the system and components and assuring that all performance, endurance, maintenance, safety and warning requirements of the application are met. The user must analyze all aspects of the application, follow applicable industry standards, and follow the information concerning the product in the current product catalog and in any other materials provided from Parker or its subsidiaries or authorized distributors.

To the extent that Parker or its subsidiaries or authorized distributors provide component or system options based upon data or specifications provided by the user, the user is responsible for determining that such data and specifications are suitable and sufficient for all applications and reasonably foreseeable uses of the components or systems.

Offer of Sale

The items described in this document are hereby offered for sale by Parker Hannifin Corporation, its subsidiaries or its authorized distributors. This offer and its acceptance are governed by the provisions stated in the "Offer of Sale".

© Copyright 2016, Parker Hannifin Corporation, All Rights Reserved

Parker Hannifin Corporation
Chelsea Products Division
Olive Branch, MS 38654 USA

Transmission Make and Model	PTO Appl. Number	Number Forward Speeds	Teeth in PTO Driver
CX28	CAT-2	6	L79-CS-R79
CX31	CAT-1	6	L88-CS-R88
CX35	CAT-3	8	L100-CS-R100
TH48FT-E70 (OFF Highway Automatic)	CAT-4	5	L57-R57-B56
TH48FT-E80 (OFF Highway Automatic)	CAT-5	5	L57-R57-B51

IMPORTANT: See Safety Information in Section 1 of the Chelsea Applications catalog HY25-3000/US.

Transmission PTO Driver & Apertures (Viewed from Rear of Transmission)

L-Left Side R-Right Side B-Bottom Side T-Top Side CS-Countershaft

For transmissions not listed, contact your authorized Chelsea Distributor.

Parker Hannifin Corporation
Chelsea Products Division
Olive Branch, MS 38654 USA

Pressure Port Locations & Hose Chart (SK-414 Rev B)

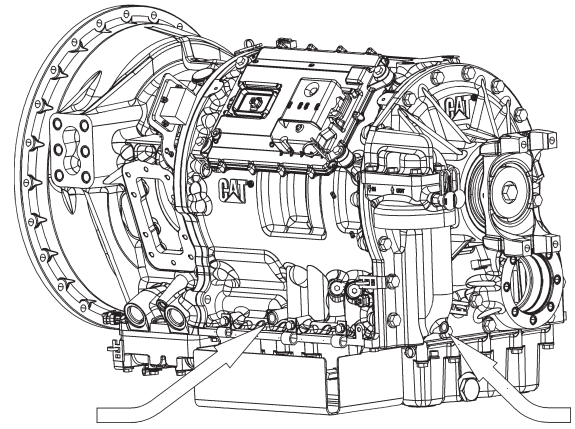

CX31
(Filter Removed for Clarity)

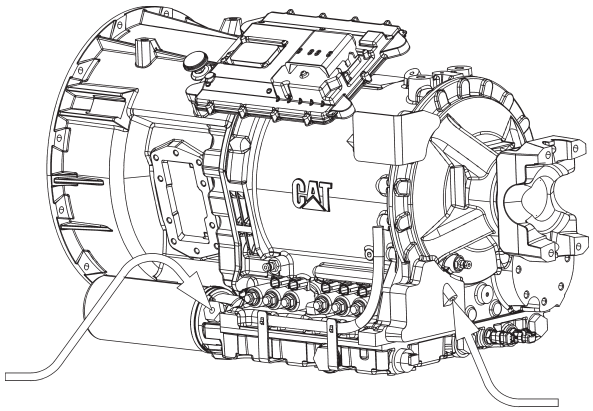

CX28

Both High Pressure Connections are -4 O-Ring Boss

HOSE CHART							
Trans.	**PTO**	**PTO Location**	**High Oil Pressure Location**	**PTO Valve Location**	**PTO Fitting**	**Trans. Fitting**	**Trans.-PTO Valve Hose #**
CX31 CX28	280, 287, 859, 870	Driver (LHS)	LHS	Attached	379486	379812	329075-1X
		Driver (LHS)	Rear				329075-5X
		Pass. (RHS)	LHS				329075-2X
		Pass. (RHS)	Rear			379486	329075-5X
		Driver (LHS)	LHS	Remote	379486	379812	329130-6X
		Driver (LHS)	Rear				329130-6X
		Pass. (RHS)	LHS				329130-6X
		Pass. (RHS)	Rear				329130-6X
	267	Driver (LHS)	LHS	N/A	379486	379812	329130-3X
		Driver (LHS)	Rear			379486	329075-5X
		Pass. (RHS)	LHS			379812	329075-2X
		Pass. (RHS)	Rear			379812	329075-5X
	867, 877	Driver (LHS)	LHS	N/A	379486	379812	329130-3X
		Driver (LHS)	Rear				329075-5X
		Pass. (RHS)	LHS				329075-2X
		Pass. (RHS)	Rear			379486	329075-5X

LHS = Left Hand Side of Transmission, 8 o'clock position
RHS = Right Hand Side of Transmission, 1 o'clock position

NOTES:

1. PTO Fitting 379486 and transmission fitting 379812 included with the PTO unit. If using 379486 in transmission, fitting must be purchased separately.
2. Hoses to be purchased separately.
3. 379486 elbow will not install on left hand (driver) side oil port due to transmission interference.
4. If 379486 is listed as transmission fitting for rear location, route hose along right hand (passenger) side of transmission and under transmission output yoke.

Parker Hannifin Corporation
Chelsea Products Division
Olive Branch, MS 38654 USA

CX31

LEFT SIDE ONLY

TRANSMISSION GEAR DATA:
L.S. 10-BOLT Opening Gear FORWARD of Centerline
88 Teeth - R.H. HELIX

PITCH LINE TO APERTURE FACE:
1.7207" (43.7060MM)

RIGHT SIDE ONLY

TRANSMISSION GEAR DATA:
R.S. 10-BOLT Opening Gear FORWARD of Centerline
88 Teeth - R.H. HELIX

PITCH LINE TO APERTURE FACE:
1.7207" (43.7060MM)

Caution: Application Approval Required for PTO Output Shaft Speeds Above 2500 RPM

ONE SPEED - TWO GEAR - CONSTANT MESH

LEFT Side PTO Model	Inter. Torq.	Dir. Rot.	Engine % Fwd.	Engine % Rev.	Filler Block	Adapter Assy.	Stud Kit	RIGHT Side PTO Model	Inter. Torq.	Dir. Rot.	Engine % Fwd.	Engine % Rev.	Filler Block	Adapter Assy.	Stud Kit
267SBKVP-*5 (6)	402	Eng	104				Furnished	267SBKVP-*3 (6)	402	Eng	104				Furnished
267SDKVP-*5 (7)	390	Eng	124				Furnished	267SDKVP-*3 (7)	390	Eng	124				Furnished
267SGKVP-*5 (8)	360	Eng	148				Furnished	267SGKVP-*3 (8)	360	Eng	148				Furnished
267SMKVP-*5 (9)	318	Eng	185				Furnished	267SMKVP-*3 (9)	318	Eng	185				Furnished
267SSKVP-*5 (10)	265	Eng	231				Furnished	267SSKVP-*3 (10)	265	Eng	231				Furnished
267XBKVP-*5 (1)	335	Eng	104				Furnished	267XBKVP-*3 (1)	335	Eng	104				Furnished
267XCKVP-*5 (11)	330	Eng	111				Furnished	267XCKVP-*3 (11)	330	Eng	111				Furnished
267XDKVP-*5 (2)	325	Eng	124				Furnished	267XDKVP-*3 (2)	325	Eng	124				Furnished
267XGKVP-*5 (3)	300	Eng	148				Furnished	267XGKVP-*3 (3)	300	Eng	148				Furnished
267XMKVP-*5 (4)	265	Eng	185				Furnished	267XMKVP-*3 (4)	265	Eng	185				Furnished
267XSKVP-*5 (5)	250	Eng	231				Furnished	267XSKVP-*3 (5)	250	Eng	231				Furnished
287GBKVP-*5 (13)	300	Eng	86				Furnished	287GBKVP-*5 (13)	300	Eng	86				Furnished
287GBKVP-*8 (13)	300	Eng	81				Furnished	287GBKVP-*8 (13)	300	Eng	81				Furnished
287GCKVP-*5 (13)	390	Eng	104				Furnished	287GCKVP-*5 (13)	390	Eng	104				Furnished
287GCKVP-*8 (13)	390	Eng	98				Furnished	287GCKVP-*8 (13)	390	Eng	98				Furnished
287GDKVP-*5 (13)	390	Eng	124				Furnished	287GDKVP-*5 (13)	390	Eng	124				Furnished
287GDKVP-*8 (13)	390	Eng	117				Furnished	287GDKVP-*8 (13)	390	Eng	117				Furnished
287GGKVP-*5 (13)	360	Eng	148				Furnished	287GGKVP-*5 (13)	360	Eng	148				Furnished
287GGKVP-*8 (13)	360	Eng	146				Furnished	287GGKVP-*8 (13)	360	Eng	146				Furnished
287GKKVP-*5 (13)	340	Eng	165				Furnished	287GKKVP-*5 (13)	340	Eng	165				Furnished
287GMKVP-*5 (13)	318	Eng	185				Furnished	287GMKVP-*5 (13)	318	Eng	185				Furnished
287GMKVP-*8 (13)	318	Eng	171				Furnished	287GMKVP-*8 (13)	318	Eng	171				Furnished
287GPKVP-*5 (13)	290	Eng	207				Furnished	287GPKVP-*5 (13)	290	Eng	207				Furnished
287GPKVP-*8 (13)	290	Eng	190				Furnished	287GPKVP-*8 (13)	290	Eng	190				Furnished
287GSKVP-*8 (13)	265	Eng	212				Furnished	287GSKVP-*8 (13)	265	Eng	212				Furnished
877XAKVP-*5 (12)	598	Eng	117				Furnished	877XAKVP-*3 (12)	598	Eng	117				Furnished
877XBKVP-*5 (12)	560	Eng	125				Furnished	877XBKVP-*3 (12)	560	Eng	125				Furnished
877XCKVP-*5 (12)	522	Eng	134				Furnished	877XCKVP-*3 (12)	522	Eng	134				Furnished
877XDKVP-*5 (12)	490	Eng	143				Furnished	877XDKVP-*3 (12)	490	Eng	143				Furnished
877XEKVP-*5 (12)	432	Eng	162				Furnished	877XEKVP-*3 (12)	432	Eng	162				Furnished
877XFKVP-*5 (12)	380	Eng	184				Furnished	877XFKVP-*3 (12)	380	Eng	184				Furnished

Continued Next Page

NOTE: See Front Section of Caterpillar Index for Pressure Hose Chart Requirements (SK-414) for Side Mount Applications. Rear Mounts come with the Hose Supplied.

NOTE: Powershift PTO Units Require a Pressure Regulating Solenoid and are Shipped with Units Ordered for this Transmission ("LA" or "KV" input gear).

NOTE: The Internal Drive Shaft for the Rear Mount Opening is Optional from Caterpillar and Must be Specified when the Transmission is Ordered.

NOTE: The "XV" Output for the CAT-D Rear Mount is Rated at Both 800 Lbs.ft Intermittent and 800 Lbs.ft Continuous. This Output is not Derated for Continuous Operation.

NOTE: The CAT-H & 560V Series rear mounts are rated at 335 Lbs. ft for both Intermittent and Continuous duty applications (All Output Options).

NOTE: 280, 870 Family and 590 Series of PTOs stated Torque is for Intermittent and Continuous Duty Applications.

NOTE: The Transmission Filter may Interfere with Large Pumps Mounted to PTOs at the 8 o'clock (Left Side) Position. A Remote Mount Filter Kit can be ordered from Caterpillar if this Option is Required. Large Pumps will also Require the Use of the Rear Pressure Port for Oil Supply Requirements. (See Front Section for Location and Hose Requirements, SK-414)

NOTE: The 267 Series in the "5" Arrangement may have possible interference between the lube fitting and torque converter housing. Make sure the fitting is screwed in completely before the PTO is torqued to proper specifications. Verify that the fitting is not making contact with the transmission housing. A "3" arrangement with SAE "B" output must either be "XQ" or "AK" in order to be used. The "XK" output can not be used due to interference between flange and pressure lube fitting.

(1) Input Gear Part No. 5-P-1361
(2) Input Gear Part No. 5-P-1362
(3) Input Gear Part No. 5-P-1363
(4) Input Gear Part No. 5-P-1367
(5) Input Gear Part No. 5-P-1368
(6) Input Gear Part No. 5-P-1402
(7) Input Gear Part No. 5-P-1413
(8) Input Gear Part No. 5-P-1414
(9) Input Gear Part No. 5-P-1415
(10) Input Gear Part No. 5-P-1416
(11) Input Gear Part No. 5-P-1419
(12) Input Gear Part No. 5-P-1468
(13) Input Gear Part No. 5-P-1493

Parker Hannifin Corporation
Chelsea Products Division
Olive Branch, MS 38654 USA

CX31

LEFT SIDE ONLY

TRANSMISSION GEAR DATA:
L.S. 10-BOLT Opening Gear FORWARD of Centerline
88 Teeth - R.H. HELIX

PITCH LINE TO APERTURE FACE:
1.7207" (43.7060MM)

RIGHT SIDE ONLY

TRANSMISSION GEAR DATA:
R.S. 10-BOLT Opening Gear FORWARD of Centerline
88 Teeth - R.H. HELIX

PITCH LINE TO APERTURE FACE:
1.7207" (43.7060MM)

Caution: Application Approval Required for PTO Output Shaft Speeds Above 2500 RPM

ONE SPEED - TWO GEAR - POWERSHIFT (HYDRAULIC)

LEFT Side PTO Model	Inter. Torq.	Dir. Rot.	Engine % Fwd.	Engine % Rev.	Filler Block	Adapter Assy.	Stud Kit	RIGHT Side PTO Model	Inter. Torq.	Dir. Rot.	Engine % Fwd.	Engine % Rev.	Filler Block	Adapter Assy.	Stud Kit
280GBKVP-*5 (13)	300	Eng	86				Furnished	280GBKVP-*5 (13)	300	Eng	86				Furnished
280GBKVP-*8 (13)	300	Eng	81				Furnished	280GBKVP-*8 (13)	300	Eng	81				Furnished
280GCKVP-*5 (13)	390	Eng	104				Furnished	280GCKVP-*5 (13)	390	Eng	104				Furnished
280GCKVP-*8 (13)	390	Eng	98				Furnished	280GCKVP-*8 (13)	390	Eng	98				Furnished
280GDKVP-*5 (13)	390	Eng	124				Furnished	280GDKVP-*5 (13)	390	Eng	124				Furnished
280GDKVP-*8 (13)	390	Eng	117				Furnished	280GDKVP-*8 (13)	390	Eng	117				Furnished
280GGKVP-*5 (13)	360	Eng	148				Furnished	280GGKVP-*5 (13)	360	Eng	148				Furnished
280GGKVP-*8 (13)	360	Eng	146				Furnished	280GGKVP-*8 (13)	360	Eng	146				Furnished
280GKKVP-*5 (13)	340	Eng	165				Furnished	280GKKVP-*5 (13)	340	Eng	165				Furnished
280GMKVP-*5 (13)	318	Eng	185				Furnished	280GMKVP-*5 (13)	318	Eng	185				Furnished
280GMKVP-*8 (13)	318	Eng	171				Furnished	280GMKVP-*8 (13)	318	Eng	171				Furnished
280GPKVP-*5 (13)	290	Eng	207				Furnished	280GPKVP-*5 (13)	290	Eng	207				Furnished
280GPKVP-*8 (13)	290	Eng	190				Furnished	280GPKVP-*8 (13)	290	Eng	190				Furnished
280GSKVP-*8 (13)	265	Eng	212				Furnished	280GSKVP-*8 (13)	265	Eng	212				Furnished
870XAKVP-*5 (12)	598	Eng	117				Furnished	870XAKVP-*3 (12)	598	Eng	117				Furnished
870XBKVP-*5 (12)	560	Eng	125				Furnished	870XBKVP-*3 (12)	560	Eng	125				Furnished
870XCKVP-*5 (12)	522	Eng	134				Furnished	870XCKVP-*3 (12)	522	Eng	134				Furnished
870XDKVP-*5 (12)	490	Eng	143				Furnished	870XDKVP-*3 (12)	490	Eng	143				Furnished
870XEKVP-*5 (12)	432	Eng	162				Furnished	870XEKVP-*3 (12)	432	Eng	162				Furnished
870XFKVP-*5 (12)	380	Eng	184				Furnished	870XFKVP-*3 (12)	380	Eng	184				Furnished

Continued Next Page

NOTE: See Front Section of Caterpillar Index for Pressure Hose Chart Requirements (SK-414) for Side Mount Applications. Rear Mounts come with the Hose Supplied.

NOTE: Powershift PTO Units Require a Pressure Regulating Solenoid and are Shipped with Units Ordered for this Transmission ("LA" or "KV" input gear).

NOTE: The Internal Drive Shaft for the Rear Mount Opening is Optional from Caterpillar and Must be Specified when the Transmission is Ordered.

NOTE: The "XV" Output for the CAT-D Rear Mount is Rated at Both 800 Lbs.ft Intermittent and 800 Lbs.ft Continuous. This Output is not Derated for Continuous Operation.

NOTE: The CAT-H & 560V Series rear mounts are rated at 335 Lbs. ft for both Intermittent and Continuous duty applications (All Output Options).

NOTE: 280, 870 Family and 590 Series of PTOs stated Torque is for Intermittent and Continuous Duty Applications.

NOTE: The Transmission Filter may Interfere with Large Pumps Mounted to PTOs at the 8 o'clock (Left Side) Position. A Remote Mount Filter Kit can be ordered from Caterpillar if this Option is Required. Large Pumps will also Require the Use of the Rear Pressure Port for Oil Supply Requirements. (See Front Section for Location and Hose Requirements, SK-414)

NOTE: The 267 Series in the "5" Arrangement may have possible interference between the lube fitting and torque converter housing. Make sure the fitting is screwed in completely before the PTO is torqued to proper specifications. Verify that the fitting is not making contact with the transmission housing. A "3" arrangement with SAE "B" output must either be "XQ" or "AK" in order to be used. The "XK" output can not be used due to interference between flange and pressure lube fitting.

(12) Input Gear Part No. 5-P-1468
(13) Input Gear Part No. 5-P-1493

Parker Hannifin Corporation
Chelsea Products Division
Olive Branch, MS 38654 USA

CX31

REAR SIDE ONLY

TRANSMISSION GEAR DATA:
REAR 08-BOLT Opening

PITCH LINE TO APERTURE FACE:

Caution: Application Approval Required for PTO Output Shaft Speeds Above 2500 RPM

REAR Side PTO Model	Inter. Torq.	Dir. Rot.	Engine %		Filler Block	Adapter Assy.	Stud Kit		Inter. Torq.	Dir. Rot.	Engine %		Filler Block	Adapter Assy.	Stud Kit
			Fwd.	Rev.							Fwd.	Rev.			
REAR MOUNT - CONSTANT MESH															
CAT-DNXLA-*-*	800	Opp	125				Furnished								
REAR MOUNT - POWERSHIFT (HYDRAULIC)															
560VNLAW-*1	335	Opp	125				Furnished								
590XRLAW-*X	650	Opp	125				Furnished								
CAT-HNXLA-*-*	335	Opp	125				Furnished								

560V Pump Options Chart

Model Code	Displacement in³/rev [ml/rev]	Flow (1) GPM [l/m]	Max Pressure PSI [Bar] (2)		Speed RPM (3)	
			Intermittent	Continuous	Minimum	Maximum
17	3.56 [58.3]	18.48 [70.0]	4000 [275]	3500 [240]	400	2800
22	4.29 [70.3]	22.28 [84.4]	4000 [275]	3500 [240]	400	2800
25	4.84 [79.3]	25.14 [95.2]	4000 [275]	3500 [240]	400	2500
31	6.10 [100.0]	31.70 [119.9]	3000 [210]	2300 [160]	400	2500

(1) Flow at 1200 RPM pump speed, 960 RPM engine and 0 PSI
(2) Pressures are stated for antiwear petroleum base only
(3) Based on antiwear petroleum or non antiwear petroleum base. For synthetic fluids, water in oil emulsions or water glycols MAX RPM is 1800. Contact Chelsea for availability of other cartridge sizes.

NOTE: See Front Section of Caterpillar Index for Pressure Hose Chart Requirements (SK-414) for Side Mount Applications. Rear Mounts come with the Hose Supplied.

NOTE: Powershift PTO Units Require a Pressure Regulating Solenoid and are Shipped with Units Ordered for this Transmission ("LA" or "KV" input gear).

NOTE: The Internal Drive Shaft for the Rear Mount Opening is Optional from Caterpillar and Must be Specified when the Transmission is Ordered.

NOTE: The "XV" Output for the CAT-D Rear Mount is Rated at Both 800 Lbs.ft Intermittent and 800 Lbs.ft Continuous. This Output is not Derated for Continuous Operation.

NOTE: The CAT-H & 560V Series rear mounts are rated at 335 Lbs. ft for both Intermittent and Continuous duty applications (All Output Options).

NOTE: 280, 870 Family and 590 Series of PTOs stated Torque is for Intermittent and Continuous Duty Applications.

NOTE: The Transmission Filter may Interfere with Large Pumps Mounted to PTOs at the 8 o'clock (Left Side) Position. A Remote Mount Filter Kit can be ordered from Caterpillar if this Option is Required. Large Pumps will also Require the Use of the Rear Pressure Port for Oil Supply Requirements. (See Front Section for Location and Hose Requirements, SK-414)

NOTE: The 267 Series in the "5" Arrangement may have possible interference between the lube fitting and torque converter housing. Make sure the fitting is screwed in completely before the PTO is torqued to proper specifications. Verify that the fitting is not making contact with the transmission housing. A "3" arrangement with SAE "B" output must either be "XQ" or "AK" in order to be used. The "XK" output can not be used due to interference between flange and pressure lube fitting.

CX28

LEFT SIDE ONLY

TRANSMISSION GEAR DATA:
L.S. 10-BOLT Opening Gear FORWARD of Centerline
79 Teeth - R.H. HELIX

PITCH LINE TO APERTURE FACE:
1.7207" (43.7060MM)

RIGHT SIDE ONLY

TRANSMISSION GEAR DATA:
R.S. 10-BOLT Opening Gear FORWARD of Centerline
79 Teeth - R.H. HELIX

PITCH LINE TO APERTURE FACE:
1.7207" (43.7060MM)

Caution: Application Approval Required for PTO Output Shaft Speeds Above 2500 RPM

ONE SPEED - TWO GEAR - CONSTANT MESH

LEFT Side PTO Model	Inter. Torq.	Dir. Rot.	Engine % Fwd.	Engine % Rev.	Filler Block	Adapter Assy.	Stud Kit	RIGHT Side PTO Model	Inter. Torq.	Dir. Rot.	Engine % Fwd.	Engine % Rev.	Filler Block	Adapter Assy.	Stud Kit
267SBKVP-*5 (6)	402	Eng	94				Furnished	267SBKVP-*3 (6)	402	Eng	94				Furnished
267SDKVP-*5 (7)	390	Eng	112				Furnished	267SDKVP-*3 (7)	390	Eng	112				Furnished
267SGKVP-*5 (8)	360	Eng	133				Furnished	267SGKVP-*3 (8)	360	Eng	133				Furnished
267SMKVP-*5 (9)	318	Eng	167				Furnished	267SMKVP-*3 (9)	318	Eng	167				Furnished
267SSKVP-*5 (10)	265	Eng	207				Furnished	267SSKVP-*3 (10)	265	Eng	207				Furnished
267XBKVP-*5 (1)	335	Eng	94				Furnished	267XBKVP-*3 (1)	335	Eng	94				Furnished
267XCKVP-*5 (11)	330	Eng	99				Furnished	267XCKVP-*3 (11)	330	Eng	99				Furnished
267XDKVP-*5 (2)	325	Eng	112				Furnished	267XDKVP-*3 (2)	325	Eng	112				Furnished
267XGKVP-*5 (3)	300	Eng	133				Furnished	267XGKVP-*3 (3)	300	Eng	133				Furnished
267XMKVP-*5 (4)	265	Eng	167				Furnished	267XMKVP-*3 (4)	265	Eng	166				Furnished
267XSKVP-*5 (5)	250	Eng	207				Furnished	267XSKVP-*3 (5)	250	Eng	207				Furnished
287GBKVP-*5 (13)	300	Eng	77				Furnished	287GBKVP-*3 (13)	300	Eng	77				Furnished
287GBKVP-*8 (13)	300	Eng	73				Furnished	287GBKVP-*8 (13)	300	Eng	73				Furnished
287GCKVP-*5 (13)	390	Eng	93				Furnished	287GCKVP-*3 (13)	390	Eng	93				Furnished
287GCKVP-*8 (13)	390	Eng	88				Furnished	287GCKVP-*8 (13)	390	Eng	88				Furnished
287GDKVP-*5 (13)	390	Eng	112				Furnished	287GDKVP-*3 (13)	390	Eng	112				Furnished
287GDKVP-*8 (13)	390	Eng	105				Furnished	287GDKVP-*8 (13)	390	Eng	105				Furnished
287GGKVP-*5 (13)	360	Eng	133				Furnished	287GGKVP-*3 (13)	360	Eng	133				Furnished
287GGKVP-*8 (13)	360	Eng	131				Furnished	287GGKVP-*8 (13)	360	Eng	131				Furnished
287GKKVP-*5 (13)	340	Eng	149				Furnished	287GKKVP-*3 (13)	340	Eng	149				Furnished
287GMKVP-*5 (13)	318	Eng	166				Furnished	287GMKVP-*3 (13)	318	Eng	185				Furnished
287GMKVP-*8 (13)	318	Eng	154				Furnished	287GMKVP-*8 (13)	318	Eng	154				Furnished
287GPKVP-*5 (13)	290	Eng	186				Furnished	287GPKVP-*3 (13)	290	Eng	186				Furnished
287GPKVP-*8 (13)	290	Eng	171				Furnished	287GPKVP-*8 (13)	290	Eng	171				Furnished
287GSKVP-*5 (13)	265	Eng	207				Furnished	287GSKVP-*3 (13)	265	Eng	207				Furnished
287GSKVP-*8 (13)	265	Eng	190				Furnished	287GSKVP-*8 (13)	265	Eng	190				Furnished
877XAKVP-*5 (12)	476	Eng	105				Furnished	877XAKVP-*3 (12)	476	Eng	105				Furnished
877XBKVP-*5 (12)	476	Eng	105				Furnished	877XBKVP-*3 (12)	442	Eng	113				Furnished
877XCKVP-*5 (12)	417	Eng	120				Furnished	877XCKVP-*3 (12)	417	Eng	120				Furnished
877XDKVP-*5 (12)	391	Eng	128				Furnished	877XDKVP-*3 (12)	391	Eng	128				Furnished
877XEKVP-*5 (12)	345	Eng	145				Furnished	877XEKVP-*3 (12)	345	Eng	145				Furnished
877XFKVP-*5 (12)	303	Eng	165				Furnished	877XFKVP-*3 (12)	303	Eng	165				Furnished

Continued Next Page

NOTE: See Front Section of Caterpillar Index for Pressure Hose Chart Requirements (SK-414) for Side Mount Applications. Rear Mount Units come with Hose Supplied.

NOTE: Powershift PTO Units Require a Pressure Regulating Solenoid and are Shipped with Units Ordered for this Transmission ("LA" or "KV" input gear).

NOTE: The Internal Drive Shaft for the Rear Mount Opening is Optional from Caterpillar and Must be Specified when the Transmission is Ordered.

NOTE: The "XV" Output for the CAT-D Rear Mount is Limited to 667 Lbs.ft Intermittent Torque Due to Transmission Load Limits. All Other Output Options are Limited by the Hydraulic Pump Output Shaft Spline.

NOTE: The CAT-H & 560V Series rear mounts are rated at 335 Lbs.ft for both Intermittent and Continuous duty applications (All Output Options).

NOTE: Large Pumps on the Left Hand Side (LHS) may Require the Use of the Rear Pressure Port for Oil Supply Requirements. If the Left Hand Side (LHS) PTO opening is used, the transmission dipstick should be relocated to the Right Hand Side (RHS).

NOTE: The "3" Arrangement with SAE "B" Output Must Either be "XQ" or "AK". The "XK" Output can Not be Used Due to Interference Between Flange and Pressure Lube Fitting. On the LHS, if the 267 Series "5" arrangement is used, pump clearance is severely limited due to position of the transmission valve bank, the "3" arrangement offers much more clearance.

NOTE: 859, 867, 277, and 280 Series will not fit and/or allow pump clearance on the Left Hand Side (LHS).

NOTE: 280, 870 Family, and 590 Series of PTOs stated Torque is for Intermittent and Continuous duty applications.

(1) Input Gear Part No. 5-P-1361
(2) Input Gear Part No. 5-P-1362
(3) Input Gear Part No. 5-P-1363
(4) Input Gear Part No. 5-P-1367
(5) Input Gear Part No. 5-P-1368
(6) Input Gear Part No. 5-P-1402
(7) Input Gear Part No. 5-P-1413
(8) Input Gear Part No. 5-P-1414
(9) Input Gear Part No. 5-P-1415
(10) Input Gear Part No. 5-P-1416
(11) Input Gear Part No. 5-P-1419
(12) Input Gear Part No. 5-P-1468
(13) Input Gear Part No. 5-P-1493

Parker Hannifin Corporation
Chelsea Products Division
Olive Branch, MS 38654 USA

CX28

LEFT SIDE ONLY

TRANSMISSION GEAR DATA:
L.S. 10-BOLT Opening Gear FORWARD of Centerline
79 Teeth - R.H. HELIX

PITCH LINE TO APERTURE FACE:
1.7207" (43.7060MM)

RIGHT SIDE ONLY

TRANSMISSION GEAR DATA:
R.S. 10-BOLT Opening Gear FORWARD of Centerline
79 Teeth - R.H. HELIX

PITCH LINE TO APERTURE FACE:
1.7207" (43.7060MM)

Caution: Application Approval Required for PTO Output Shaft Speeds Above 2500 RPM

LEFT Side PTO Model	Inter. Torq.	Dir. Rot.	Engine % Fwd.	Engine % Rev.	Filler Block	Adapter Assy.	Stud Kit	RIGHT Side PTO Model	Inter. Torq.	Dir. Rot.	Engine % Fwd.	Engine % Rev.	Filler Block	Adapter Assy.	Stud Kit
ONE SPEED - TWO GEAR - CONSTANT MESH															
877XGFJP-*5 (12)	267	Eng	187				Furnished	877XGFJP-*3 (12)	267	Eng	187				Furnished
877XHKVP-*5 (12)	251	Eng	199				Furnished	877XHKVP-*3 (12)	251	Eng	199				Furnished
ONE SPEED - TWO GEAR - POWERSHIFT (HYDRAULIC)															
280GBKVP-*5 (13)	300	Eng	77				Furnished	280GBKVP-*3 (13)	300	Eng	77				Furnished
280GBKVP-*8 (13)	300	Eng	73				Furnished	280GBKVP-*8 (13)	300	Eng	73				Furnished
280GCKVP-*5 (13)	390	Eng	93				Furnished	280GCKVP-*3 (13)	390	Eng	93				Furnished
280GCKVP-*8 (13)	390	Eng	88				Furnished	280GCKVP-*8 (13)	390	Eng	88				Furnished
280GDKVP-*5 (13)	390	Eng	112				Furnished	280GDKVP-*3 (13)	390	Eng	112				Furnished
280GDKVP-*8 (13)	390	Eng	105				Furnished	280GDKVP-*8 (13)	390	Eng	105				Furnished
280GGKVP-*5 (13)	360	Eng	133				Furnished	280GGKVP-*3 (13)	360	Eng	133				Furnished
280GGKVP-*8 (13)	360	Eng	131				Furnished	280GGKVP-*8 (13)	360	Eng	131				Furnished
280GKKVP-*5 (13)	340	Eng	149				Furnished	280GKKVP-*3 (13)	340	Eng	149				Furnished
280GMKVP-*5 (13)	318	Eng	166				Furnished	280GMKVP-*3 (13)	318	Eng	185				Furnished
280GMKVP-*8 (13)	318	Eng	154				Furnished	280GMKVP-*8 (13)	318	Eng	154				Furnished
280GPKVP-*5 (13)	290	Eng	186				Furnished	280GPKVP-*3 (13)	290	Eng	186				Furnished
280GPKVP-*8 (13)	290	Eng	171				Furnished	280GPKVP-*8 (13)	290	Eng	171				Furnished
280GSKVP-*5 (13)	265	Eng	207				Furnished	280GSKVP-*3 (13)	265	Eng	207				Furnished
280GSKVP-*8 (13)	265	Eng	190				Furnished	280GSKVP-*8 (13)	265	Eng	190				Furnished
870XAKVP-*5 (12)	476	Eng	105				Furnished	870XAKVP-*3 (12)	476	Eng	105				Furnished
870XBKVP-*5 (12)	442	Eng	113				Furnished	870XBKVP-*3 (12)	442	Eng	113				Furnished
870XCKVP-*5 (12)	417	Eng	120				Furnished	870XCKVP-*3 (12)	417	Eng	120				Furnished
870XDKVP-*5 (12)	391	Eng	128				Furnished	870XDKVP-*3 (12)	391	Eng	128				Furnished
870XEKVP-*5 (12)	345	Eng	145				Furnished	870XEKVP-*3 (12)	345	Eng	145				Furnished
870XFKVP-*5 (12)	267	Eng	187				Furnished	870XFKVP-*3 (12)	303	Eng	165				Furnished
870XGKVP-*5 (12)	267	Eng	187				Furnished	870XGKVP-*3 (12)	267	Eng	187				Furnished
870XHKVP-*5 (12)	251	Eng	199				Furnished	870XHKVP-*3 (12)	251	Eng	199				Furnished

Continued Next Page

NOTE: See Front Section of Caterpillar Index for Pressure Hose Chart Requirements (SK-414) for Side Mount Applications. Rear Mount Units come with Hose Supplied.

NOTE: Powershift PTO Units Require a Pressure Regulating Solenoid and are Shipped with Units Ordered for this Transmission ("LA" or "KV" input gear).

NOTE: The Internal Drive Shaft for the Rear Mount Opening is Optional from Caterpillar and Must be Specified when the Transmission is Ordered.

NOTE: The "XV" Output for the CAT-D Rear Mount is Limited to 667 Lbs.ft Intermittent Torque Due to Transmission Load Limits. All Other Output Options are Limited by the Hydraulic Pump Output Shaft Spline.

NOTE: The CAT-H & 560V Series rear mounts are rated at 335 Lbs.ft for both Intermittent and Continuous duty applications (All Output Options).

NOTE: Large Pumps on the Left Hand Side (LHS) may Require the Use of the Rear Pressure Port for Oil Supply Requirements. If the Left Hand Side (LHS) PTO opening is used, the transmission dipstick should be relocated to the Right Hand Side (RHS).

NOTE: The "3" Arrangement with SAE "B" Output Must Either be "XQ" or "AK". The "XK" Output can Not be Used Due to Interference Between Flange and Pressure Lube Fitting. On the LHS, if the 267 Series "5" arrangement is used, pump clearance is severely limited due to position of the transmission valve bank, the "3" arrangement offers much more clearance.

NOTE: 859, 867, 277, and 280 Series will not fit and/or allow pump clearance on the Left Hand Side (LHS).

NOTE: 280, 870 Family, and 590 Series of PTOs stated Torque is for Intermittent and Continuous duty applications.

(12) Input Gear Part No. 5-P-1468
(13) Input Gear Part No. 5-P-1493

Parker Hannifin Corporation
Chelsea Products Division
Olive Branch, MS 38654 USA

CX28

REAR SIDE ONLY

TRANSMISSION GEAR DATA:
REAR 08-BOLT Opening

PITCH LINE TO APERTURE FACE:

Caution: Application Approval Required for PTO Output Shaft Speeds Above 2500 RPM

REAR Side PTO Model	Inter. Torq.	Dir. Rot.	Engine % Fwd.	Engine % Rev.	Filler Block	Adapter Assy.	Stud Kit		Inter. Torq.	Dir. Rot.	Engine % Fwd.	Engine % Rev.	Filler Block	Adapter Assy.	Stud Kit
REAR MOUNT - CONSTANT MESH															
CAT-DNXLA-*-*	667	Opp	125				Furnished								
REAR MOUNT - POWERSHIFT (HYDRAULIC)															
560VNLAW-*1	335	Opp	125				Furnished								
590XRLAW-*X	650	Opp	125				Furnished								
CAT-HNXLA-*-*	335	Opp	125				Furnished								

560V Pump Options Chart

Model Code	Displacement in3/rev [ml/rev]	Flow (1) GPM [l/m]	Max Pressure PSI [Bar] (2)		Speed RPM (3)	
			Intermittent	Continuous	Minimum	Maximum
17	3.56 [58.3]	18.48 [70.0]	4000 [275]	3500 [240]	400	2800
22	4.29 [70.3]	22.28 [84.4]	4000 [275]	3500 [240]	400	2800
25	4.84 [79.3]	25.14 [95.2]	4000 [275]	3500 [240]	400	2500
31	6.10 [100.0]	31.70 [119.9]	3000 [210]	2300 [160]	400	2500

(1) Flow at 1200 rpm pump speed, 960 rpm engine and 0 PSI
(2) Pressures are stated for antiwear petroleum base only
(3) Based on antiwear petroleum or non antiwear petroleum base. For synthetic fluids, water in oil emulsions or water glycols MAX RPM is 1800. Contact Chelsea for availability of other cartridge sizes.

NOTE: See Front Section of Caterpillar Index for Pressure Hose Chart Requirements (SK-414) for Side Mount Applications. Rear Mount Units come with Hose Supplied.

NOTE: Powershift PTO Units Require a Pressure Regulating Solenoid and are Shipped with Units Ordered for this Transmission ("LA" or "KV" input gear).

NOTE: The Internal Drive Shaft for the Rear Mount Opening is Optional from Caterpillar and Must be Specified when the Transmission is Ordered.

NOTE: The "XV" Output for the CAT-D Rear Mount is Limited to 667 Lbs.ft Intermittent Torque Due to Transmission Load Limits. All Other Output Options are Limited by the Hydraulic Pump Output Shaft Spline.

NOTE: The CAT-H & 560V Series rear mounts are rated at 335 Lbs.ft for both Intermittent and Continuous duty applications (All Output Options).

NOTE: Large Pumps on the Left Hand Side (LHS) may Require the Use of the Rear Pressure Port for Oil Supply Requirements. If the Left Hand Side (LHS) PTO opening is used, the transmission dipstick should be relocated to the Right Hand Side (RHS).

NOTE: The "3" Arrangement with SAE "B" Output Must Either be "XQ" or "AK". The "XK" Output can Not be Used Due to Interference Between Flange and Pressure Lube Fitting. On the LHS, if the 267 Series "5" arrangement is used, pump clearance is severely limited due to position of the transmission valve bank, the "3" arrangement offers much more clearance.

NOTE: 859, 867, 277, and 280 Series will not fit and/or allow pump clearance on the Left Hand Side (LHS).

NOTE: 280, 870 Family, and 590 Series of PTOs stated Torque is for Intermittent and Continuous duty applications.

Parker Hannifin Corporation
Chelsea Products Division
Olive Branch, MS 38654 USA

CX35

LEFT SIDE ONLY

TRANSMISSION GEAR DATA:
L.S. 10-BOLT Opening Gear FORWARD of Centerline
100 Teeth - R.H. HELIX

PITCH LINE TO APERTURE FACE:
1.7207" (43.7060MM)

RIGHT SIDE ONLY

TRANSMISSION GEAR DATA:
R.S. 10-BOLT Opening Gear FORWARD of Centerline
100 Teeth - R.H. HELIX

PITCH LINE TO APERTURE FACE:
1.7207" (43.7060MM)

Caution: Application Approval Required for PTO Output Shaft Speeds Above 2500 RPM

LEFT Side PTO Model	Inter. Torq.	Dir. Rot.	Engine % Fwd.	Engine % Rev.	Filler Block	Adapter Assy.	Stud Kit	RIGHT Side PTO Model	Inter. Torq.	Dir. Rot.	Engine % Fwd.	Engine % Rev.	Filler Block	Adapter Assy.	Stud Kit
ONE SPEED - TWO GEAR - CONSTANT MESH															
267SBKVP-*5 (5)	402	Eng	118				Furnished	267SBKVP-*3 (5)	402	Eng	118				Furnished
267SDKVP-*5 (6)	390	Eng	141				Furnished	267SDKVP-*3 (6)	390	Eng	141				Furnished
267SGKVP-*5 (7)	360	Eng	168				Furnished	267SGKVP-*3 (7)	360	Eng	168				Furnished
267SMKVP-*5 (8)	318	Eng	210				Furnished	267SMKVP-*3 (8)	318	Eng	210				Furnished
267XBKVP-*5 (1)	335	Eng	118				Furnished	267XBKVP-*3 (1)	335	Eng	118				Furnished
267XCKVP-*5 (9)	330	Eng	126				Furnished	267XCKVP-*3 (9)	330	Eng	126				Furnished
267XDKVP-*5 (2)	325	Eng	141				Furnished	267XDKVP-*3 (2)	325	Eng	141				Furnished
267XGKVP-*5 (3)	300	Eng	168				Furnished	267XGKVP-*3 (3)	300	Eng	168				Furnished
267XMKVP-*5 (4)	265	Eng	210				Furnished	267XMKVP-*3 (4)	265	Eng	210				Furnished
287GBKVP-*5 (11)	300	Eng	98				Furnished	287GBKVP-*3 (11)	300	Eng	98				Furnished
287GBKVP-*8 (11)	300	Eng	92				Furnished	287GBKVP-*8 (11)	300	Eng	92				Furnished
287GCKVP-*5 (11)	390	Eng	118				Furnished	287GCKVP-*3 (11)	390	Eng	118				Furnished
287GCKVP-*8 (11)	390	Eng	111				Furnished	287GCKVP-*8 (11)	390	Eng	111				Furnished
287GDKVP-*5 (11)	390	Eng	141				Furnished	287GDKVP-*3 (11)	390	Eng	141				Furnished
287GDKVP-*8 (11)	390	Eng	132				Furnished	287GDKVP-*8 (11)	390	Eng	132				Furnished
287GGKVP-*5 (11)	360	Eng	168				Furnished	287GGKVP-*3 (11)	360	Eng	168				Furnished
287GGKVP-*8 (11)	360	Eng	165				Furnished	287GGKVP-*8 (11)	360	Eng	165				Furnished
287GKKVP-*5 (11)	340	Eng	188				Furnished	287GKKVP-*3 (11)	340	Eng	188				Furnished
287GMKVP-*5 (11)	318	Eng	210				Furnished	287GMKVP-*3 (11)	318	Eng	210				Furnished
287GMKVP-*8 (11)	318	Eng	194				Furnished	287GMKVP-*8 (11)	318	Eng	194				Furnished
287GPKVP-*8 (11)	290	Eng	216				Furnished	287GPKVP-*8 (11)	290	Eng	216				Furnished
877XAKVP-*5 (10)	526	Eng	133				Furnished	877XAKVP-*3 (10)	526	Eng	133				Furnished
877XBKVP-*5 (10)	493	Eng	142				Furnished	877XBKVP-*3 (10)	493	Eng	142				Furnished
877XCKVP-*5 (10)	461	Eng	152				Furnished	877XCKVP-*3 (10)	461	Eng	152				Furnished
877XDKVP-*5 (10)	432	Eng	162				Furnished	877XDKVP-*3 (10)	432	Eng	162				Furnished
877XEKVP-*5 (10)	380	Eng	184				Furnished	877XEKVP-*3 (10)	380	Eng	184				Furnished
ONE SPEED - TWO GEAR - POWERSHIFT (HYDRAULIC)															
280GBKVP-*5 (11)	300	Eng	98				Furnished	280GBKVP-*3 (11)	300	Eng	98				Furnished
280GBKVP-*8 (11)	300	Eng	92				Furnished	280GBKVP-*8 (11)	300	Eng	92				Furnished
280GCKVP-*5 (11)	390	Eng	118				Furnished	280GCKVP-*3 (11)	390	Eng	118				Furnished
280GCKVP-*8 (11)	390	Eng	111				Furnished	280GCKVP-*8 (11)	390	Eng	111				Furnished

Continued Next Page

NOTE: See Front Section of Caterpillar Index for Pressure Hose Chart Requirements (SK-414) for Side Mount Applications. Rear Mounts come with the Hose Supplied.

NOTE: Powershift PTO Units Require a Pressure Regulating Solenoid and are Shipped with Units Ordered for this Transmission ("LA" or "KV" input gear).

NOTE: The Internal Drive Shaft for the Rear Mount Opening is Optional from Caterpillar and Must be Specified when the Transmission is Ordered.

NOTE: The "XV" Output for the CAT-D Rear Mount is Rated at Both 800 Lbs.ft Intermittent and 800 Lbs.ft Continuous. This Output is not Derated for Continuous Operation.

NOTE: The CAT-H & 560V Series Rear Mounts are rated at 335 Lbs.ft for both Intermittent and Continuous duty applications (All Output Options).

NOTE: 280, 870 Family, and 590 Series of PTOs stated Torque is for Intermittent and Continuous duty applications.

NOTE: The Transmission Filter may Interfere with Large Pumps Mounted to PTOs at the 8 o'clock (Left Side) Position. A Remote Mount Filter Kit can be ordered from Caterpillar if this Option is Required. Large Pumps will also Require the Use of the Rear Pressure Port for Oil Supply Requirements. (See Front Section for Location and Hose Requirements, SK-414)

NOTE: The 267 Series in the "5" Arrangement may have possible interference between the lube fitting and torque converter housing. Make sure the fitting is screwed in completely before the PTO is torqued to proper specifications. Verify that the fitting is not making contact with the transmission housing. A "3" arrangement with SAE "B" output must either be "XQ" or "AK" in order to be used. The "XK" output can not be used due to interference between flange and pressure lube fitting.

(1) Input Gear Part No. 5-P-1361
(2) Input Gear Part No. 5-P-1362
(3) Input Gear Part No. 5-P-1363
(4) Input Gear Part No. 5-P-1367
(5) Input Gear Part No. 5-P-1402
(6) Input Gear Part No. 5-P-1413
(7) Input Gear Part No. 5-P-1414
(8) Input Gear Part No. 5-P-1415
(9) Input Gear Part No. 5-P-1419
(10) Input Gear Part No. 5-P-1468
(11) Input Gear Part No. 5-P-1493

Parker Hannifin Corporation
Chelsea Products Division
Olive Branch, MS 38654 USA

CX35

LEFT SIDE ONLY

TRANSMISSION GEAR DATA:
L.S. 10-BOLT Opening Gear FORWARD of Centerline
100 Teeth - R.H. HELIX

PITCH LINE TO APERTURE FACE:
1.7207" (43.7060MM)

RIGHT SIDE ONLY

TRANSMISSION GEAR DATA:
R.S. 10-BOLT Opening Gear FORWARD of Centerline
100 Teeth - R.H. HELIX

PITCH LINE TO APERTURE FACE:
1.7207" (43.7060MM)

Caution: Application Approval Required for PTO Output Shaft Speeds Above 2500 RPM

ONE SPEED - TWO GEAR - POWERSHIFT (HYDRAULIC)

LEFT Side PTO Model	Inter. Torq.	Dir. Rot.	Engine %		Filler Block	Adapter Assy.	Stud Kit	RIGHT Side PTO Model	Inter. Torq.	Dir. Rot.	Engine %		Filler Block	Adapter Assy.	Stud Kit
			Fwd.	Rev.							Fwd.	Rev.			
280GDKVP-*5 (11)	390	Eng	141				Furnished	280GDKVP-*3 (11)	390	Eng	141				Furnished
280GDKVP-*8 (11)	390	Eng	132				Furnished	280GDKVP-*8 (11)	390	Eng	132				Furnished
280GGKVP-*5 (11)	360	Eng	168				Furnished	280GGKVP-*3 (11)	360	Eng	168				Furnished
280GGKVP-*8 (11)	360	Eng	165				Furnished	280GGKVP-*8 (11)	360	Eng	165				Furnished
280GKKVP-*5 (11)	340	Eng	188				Furnished	280GKKVP-*3 (11)	340	Eng	188				Furnished
280GMKVP-*5 (11)	318	Eng	210				Furnished	280GMKVP-*3 (11)	318	Eng	210				Furnished
280GMKVP-*8 (11)	318	Eng	194				Furnished	280GMKVP-*8 (11)	318	Eng	194				Furnished
280GPKVP-*8 (11)	290	Eng	216				Furnished	280GPKVP-*8 (11)	290	Eng	216				Furnished
870XAKVP-*5 (10)	526	Eng	133				Furnished	870XAKVP-*3 (10)	526	Eng	133				Furnished
870XBKVP-*5 (10)	493	Eng	142				Furnished	870XBKVP-*3 (10)	493	Eng	142				Furnished
870XCKVP-*5 (10)	461	Eng	152				Furnished	870XCKVP-*3 (10)	461	Eng	152				Furnished
870XDKVP-*5 (10)	432	Eng	162				Furnished	870XDKVP-*3 (10)	432	Eng	162				Furnished
870XEKVP-*5 (10)	380	Eng	184				Furnished	870XEKVP-*3 (10)	380	Eng	184				Furnished

Continued Next Page

NOTE: See Front Section of Caterpillar Index for Pressure Hose Chart Requirements (SK-414) for Side Mount Applications. Rear Mounts come with the Hose Supplied.

NOTE: Powershift PTO Units Require a Pressure Regulating Solenoid and are Shipped with Units Ordered for this Transmission ("LA" or "KV" input gear).

NOTE: The Internal Drive Shaft for the Rear Mount Opening is Optional from Caterpillar and Must be Specified when the Transmission is Ordered.

NOTE: The "XV" Output for the CAT-D Rear Mount is Rated at Both 800 Lbs.ft Intermittent and 800 Lbs.ft Continuous. This Output is not Derated for Continuous Operation.

NOTE: The CAT-H & 560V Series Rear Mounts are rated at 335 Lbs.ft for both Intermittent and Continuous duty applications (All Output Options).

NOTE: 280, 870 Family, and 590 Series of PTOs stated Torque is for Intermittent and Continuous duty applications.

NOTE: The Transmission Filter may Interfere with Large Pumps Mounted to PTOs at the 8 o'clock (Left Side) Position. A Remote Mount Filter Kit can be ordered from Caterpillar if this Option is Required. Large Pumps will also Require the Use of the Rear Pressure Port for Oil Supply Requirements. (See Front Section for Location and Hose Requirements, SK-414)

NOTE: The 267 Series in the "5" Arrangement may have possible interference between the lube fitting and torque converter housing. Make sure the fitting is screwed in completely before the PTO is torqued to proper specifications. Verify that the fitting is not making contact with the transmission housing. A "3" arrangement with SAE "B" output must either be "XQ" or "AK" in order to be used. The "XK" output can not be used due to interference between flange and pressure lube fitting.

(10) Input Gear Part No. 5-P-1468
(11) Input Gear Part No. 5-P-1493

Parker Hannifin Corporation
Chelsea Products Division
Olive Branch, MS 38654 USA

CX35

REAR SIDE ONLY

TRANSMISSION GEAR DATA:
REAR 08-BOLT Opening

PITCH LINE TO APERTURE FACE:

Caution: Application Approval Required for PTO Output Shaft Speeds Above 2500 RPM

REAR Side PTO Model	Inter. Torq.	Dir. Rot.	Engine %		Filler Block	Adapter Assy.	Stud Kit		Inter. Torq.	Dir. Rot.	Engine %		Filler Block	Adapter Assy.	Stud Kit
			Fwd.	Rev.							Fwd.	Rev.			
REAR MOUNT - CONSTANT MESH															
CAT-DNXLA-*-*	800	Opp	125				Furnished								
REAR MOUNT - POWERSHIFT (HYDRAULIC)															
560VNLAW-*1	335	Opp	125				Furnished								
590XRLAW-*X	650	Opp	125				Furnished								
CAT-HNXLA-*-*	335	Opp	125				Furnished								

560V Pump Options Chart

Model Code	Displacement in3/rev [ml/rev]	Flow (1) GPM [l/m]	Max Pressure PSI [Bar] (2)		Speed RPM (3)	
			Intermittent	Continuous	Minimum	Maximum
17	3.56 [58.3]	18.48 [70.0]	4000 [275]	3500 [240]	400	2800
22	4.29 [70.3]	22.28 [84.4]	4000 [275]	3500 [240]	400	2800
25	4.84 [79.3]	25.14 [95.2]	4000 [275]	3500 [240]	400	2500
31	6.10 [100.0]	31.70 [119.9]	3000 [210]	2300 [160]	400	2500

(1) Flow at 1200 rpm pump speed, 960 rpm engine and 0 PSI
(2) Pressures are stated for antiwear petroleum base only
(3) Based on antiwear petroleum or non antiwear petroleum base. For synthetic fluids, water in oil emulsions or water glycols MAX RPM is 1800. Contact Chelsea for availability of other cartridge sizes.

NOTE: See Front Section of Caterpillar Index for Pressure Hose Chart Requirements (SK-414) for Side Mount Applications. Rear Mounts come with the Hose Supplied.

NOTE: Powershift PTO Units Require a Pressure Regulating Solenoid and are Shipped with Units Ordered for this Transmission ("LA" or "KV" input gear).

NOTE: The Internal Drive Shaft for the Rear Mount Opening is Optional from Caterpillar and Must be Specified when the Transmission is Ordered.

NOTE: The "XV" Output for the CAT-D Rear Mount is Rated at Both 800 Lbs.ft Intermittent and 800 Lbs.ft Continuous. This Output is not Derated for Continuous Operation.

NOTE: The CAT-H & 560V Series Rear Mounts are rated at 335 Lbs.ft for both Intermittent and Continuous duty applications (All Output Options).

NOTE: 280, 870 Family, and 590 Series of PTOs stated Torque is for Intermittent and Continuous duty applications.

NOTE: The Transmission Filter may Interfere with Large Pumps Mounted to PTOs at the 8 o'clock (Left Side) Position. A Remote Mount Filter Kit can be ordered from Caterpillar if this Option is Required. Large Pumps will also Require the Use of the Rear Pressure Port for Oil Supply Requirements. (See Front Section for Location and Hose Requirements, SK-414)

NOTE: The 267 Series in the "5" Arrangement may have possible interference between the lube fitting and torque converter housing. Make sure the fitting is screwed in completely before the PTO is torqued to proper specifications. Verify that the fitting is not making contact with the transmission housing. A "3" arrangement with SAE "B" output must either be "XQ" or "AK" in order to be used. The "XK" output can not be used due to interference between flange and pressure lube fitting.

TH48FT-E70 (OFF Highway Automatic)

LEFT SIDE ONLY

TRANSMISSION GEAR DATA:
L.S. 08-BOLT Opening Gear FORWARD of Centerline
57 Teeth - SPUR

PITCH LINE TO APERTURE FACE:
0.7850" (19.9300MM)

RIGHT SIDE ONLY

TRANSMISSION GEAR DATA:
R.S. 08-BOLT Opening Gear FORWARD of Centerline
57 Teeth - SPUR

PITCH LINE TO APERTURE FACE:
0.7850" (19.9300MM)

Caution: Application Approval Required for PTO Output Shaft Speeds Above 2500 RPM

LEFT Side PTO Model	Inter. Torq.	Dir. Rot.	Engine % Fwd.	Engine % Rev.	Filler Block	Adapter Assy.	Stud Kit	RIGHT Side PTO Model	Inter. Torq.	Dir. Rot.	Engine % Fwd.	Engine % Rev.	Filler Block	Adapter Assy.	Stud Kit
ONE SPEED - TWO GEAR - MECHANICAL SHIFT															
823XBAHX-*5 (8)	500	Opp	109				Furnished	823XBAHX-*3 (8)	500	Opp	109				Furnished
823XDAHX-*5 (10)	500	Opp	129				Furnished	823XDAHX-*3 (8)	500	Opp	109				Furnished
823XGAHX-*5 (11)	500	Opp	141				Furnished	823XGAHX-*3 (11)	500	Opp	141				Furnished
823XJAHX-*5 (9)	500	Opp	165				Furnished	823XJAHX-*3 (9)	500	Opp	165				Furnished
823XMAHX-*5 (7)	500	Opp	194				Furnished	823XMAHX-*3 (7)	500	Opp	194				Furnished
880XBAHX-*5 (1)	500	Opp	109				Furnished	880XBAHX-*3 (1)	500	Opp	109				Furnished
880XDAHX-*5 (2)	500	Opp	129				Furnished	880XDAHX-*3 (2)	500	Opp	129				Furnished
880XGAHX-*5 (5)	500	Opp	141				Furnished	880XGAHX-*3 (5)	500	Opp	141				Furnished
880XJAHX-*5 (3)	500	Opp	165				Furnished	880XJAHX-*3 (3)	500	Opp	165				Furnished
880XMAHX-*5 (4)	500	Opp	194				Furnished	880XMAHX-*3 (4)	500	Opp	194				Furnished
880XQAHX-*5 (6)	450	Opp	227				Furnished	880XQAHX-*3 (6)	450	Opp	227				Furnished
ONE SPEED - TWO GEAR - POWERSHIFT (AIR)															
885XBAHX-*5 (1)	500	Opp	109				Furnished	885XBAHX-*3 (1)	500	Opp	109				Furnished
885XGAHX-*5 (5)	500	Opp	141				Furnished	885XGAHX-*3 (5)	500	Opp	141				Furnished
885XJAHX-*5 (3)	500	Opp	165				Furnished	885XJAHX-*3 (3)	500	Opp	165				Furnished

Continued Next Page

NOTE: Left PTO drive gear inside the transmission is not installed as a standard item, Must be present to install PTO to this opening.

NOTE: The "BOTTOM" PTO aperture is located on the RIGHT side at the 5 O'clock position. The "RIGHT" PTO aperture is located at the 3 O'clock position. And the "LEFT" PTO aperture is located at the 9 O'clock position.

NOTE: This Transmission is Not a True Automatic but the 56 and 57 Tooth PTO Drive Gears are Turning All the Time, Therefore Powershift PTO Models and Non-Shifting or Constant Mesh PTO Models are Recommended.

NOTE: The 56 and 57 Tooth PTO Drive Gears in this Transmission are Idler Gears, Therefore the PTO Output Speeds are the Same on All Three (3) Openings.

(1) Input Gear Part No. 5-P-1100
(2) Input Gear Part No. 5-P-1101
(3) Input Gear Part No. 5-P-1102
(4) Input Gear Part No. 5-P-1103
(5) Input Gear Part No. 5-P-1135
(6) Input Gear Part No. 5-P-1385
(7) Input Gear Part No. 5-P-283
(8) Input Gear Part No. 5-P-285
(9) Input Gear Part No. 5-P-325
(10) Input Gear Part No. 5-P-971
(11) Input Gear Part No. 5-P-980

Parker Hannifin Corporation
Chelsea Products Division
Olive Branch, MS 38654 USA

TH48FT-E70 (OFF Highway Automatic)

BOTTOM SIDE ONLY

TRANSMISSION GEAR DATA:
BOT 08-BOLT Opening Gear FORWARD of Centerline
56 Teeth - SPUR

PITCH LINE TO APERTURE FACE:
0.7677" (19.5000MM)

Caution: Application Approval Required for PTO Output Shaft Speeds Above 2500 RPM

BOTTOM Side PTO Model	Inter. Torq.	Dir. Rot.	Engine % Fwd.	Engine % Rev.	Filler Block	Adapter Assy.	Stud Kit		Inter. Torq.	Dir. Rot.	Engine % Fwd.	Engine % Rev.	Filler Block	Adapter Assy.	Stud Kit
ONE SPEED - TWO GEAR - MECHANICAL SHIFT															
823XBAHX-*3 (8)	500	Eng	109				Furnished								
823XDAHX-*3 (10)	500	Eng	129				Furnished								
823XGAHX-*3 (11)	500	Eng	141				Furnished								
823XJAHX-*3 (9)	500	Eng	165				Furnished								
823XMAHX-*3 (7)	500	Eng	194				Furnished								
880XBAHX-*3 (1)	500	Eng	109				Furnished								
880XDAHX-*3 (2)	500	Eng	129				Furnished								
880XGAHX-*3 (5)	500	Eng	141				Furnished								
880XJAHX-*3 (3)	500	Eng	165				Furnished								
880XMAHX-*3 (4)	500	Eng	194				Furnished								
880XQAHX-*3 (6)	450	Eng	227				Furnished								
ONE SPEED - TWO GEAR - POWERSHIFT (AIR)															
885XBAHX-*3 (1)	500	Eng	109				Furnished								
885XGAHX-*3 (5)	500	Eng	141				Furnished								
885XJAHX-*3 (3)	500	Eng	165				Furnished								

NOTE: Left PTO drive gear inside the transmission is not installed as a standard item, Must be present to install PTO to this opening.

NOTE: The "BOTTOM" PTO aperture is located on the RIGHT side at the 5 O'clock position. The "RIGHT" PTO aperture is located at the 3 O'clock position. And the "LEFT" PTO aperture is located at the 9 O'clock position.

NOTE: This Transmission is Not a True Automatic but the 56 and 57 Tooth PTO Drive Gears are Turning All the Time, Therefore Powershift PTO Models and Non-Shifting or Constant Mesh PTO Models are Recommended.

NOTE: The 56 and 57 Tooth PTO Drive Gears in this Transmission are Idler Gears, Therefore the PTO Output Speeds are the Same on All Three (3) Openings.

(1) Input Gear Part No. 5-P-1100
(2) Input Gear Part No. 5-P-1101
(3) Input Gear Part No. 5-P-1102
(4) Input Gear Part No. 5-P-1103
(5) Input Gear Part No. 5-P-1135
(6) Input Gear Part No. 5-P-1385
(7) Input Gear Part No. 5-P-283
(8) Input Gear Part No. 5-P-285
(9) Input Gear Part No. 5-P-325
(10) Input Gear Part No. 5-P-971
(11) Input Gear Part No. 5-P-980

Caterpillar

Parker Hannifin Corporation
Chelsea Products Division
Olive Branch, MS 38654 USA

TH48FT-E80 (OFF Highway Automatic)

LEFT SIDE ONLY

TRANSMISSION GEAR DATA:
L.S. 08-BOLT Opening Gear FORWARD of Centerline
57 Teeth - SPUR

PITCH LINE TO APERTURE FACE:
0.7850" (19.9300MM)

RIGHT SIDE ONLY

TRANSMISSION GEAR DATA:
R.S. 08-BOLT Opening Gear FORWARD of Centerline
57 Teeth - SPUR

PITCH LINE TO APERTURE FACE:
0.7850" (19.9300MM)

Caution: Application Approval Required for PTO Output Shaft Speeds Above 2500 RPM

LEFT Side PTO Model	Inter. Torq.	Dir. Rot.	Engine % Fwd.	Engine % Rev.	Filler Block	Adapter Assy.	Stud Kit	RIGHT Side PTO Model	Inter. Torq.	Dir. Rot.	Engine % Fwd.	Engine % Rev.	Filler Block	Adapter Assy.	Stud Kit
ONE SPEED - TWO GEAR - MECHANICAL SHIFT															
823XBAHX-*5 (8)	500	Opp	109				Furnished	823XBAHX-*3 (8)	500	Opp	109				Furnished
823XDAHX-*5 (10)	500	Opp	129				Furnished	823XDAHX-*3 (10)	500	Opp	129				Furnished
823XGAHX-*5 (11)	500	Opp	141				Furnished	823XGAHX-*3 (11)	500	Opp	141				Furnished
823XJAHX-*5 (9)	500	Opp	165				Furnished	823XJAHX-*3 (9)	500	Opp	165				Furnished
823XMAHX-*5 (7)	500	Opp	194				Furnished	823XMAHX-*3 (7)	500	Opp	194				Furnished
880XBAHX-*5 (1)	500	Opp	109				Furnished	880XBAHX-*3 (1)	500	Opp	109				Furnished
880XDAHX-*5 (2)	500	Opp	129				Furnished	880XDAHX-*3 (2)	500	Opp	129				Furnished
880XGAHX-*5 (5)	500	Opp	141				Furnished	880XGAHX-*3 (5)	500	Opp	141				Furnished
880XJAHX-*5 (3)	500	Opp	165				Furnished	880XJAHX-*3 (3)	500	Opp	165				Furnished
880XMAHX-*5 (4)	500	Opp	194				Furnished	880XMAHX-*3 (4)	500	Opp	194				Furnished
880XQAHX-*5 (6)	450	Opp	227				Furnished	880XQAHX-*3 (6)	450	Opp	227				Furnished
ONE SPEED - TWO GEAR - POWERSHIFT (AIR)															
885XBAHX-*5 (1)	500	Opp	109				Furnished	885XBAHX-*3 (1)	500	Opp	109				Furnished
885XGAHX-*5 (5)	500	Opp	141				Furnished	885XGAHX-*3 (5)	500	Opp	141				Furnished
885XJAHX-*5 (3)	500	Opp	165				Furnished	885XJAHX-*3 (3)	500	Opp	165				Furnished

Continued Next Page

NOTE: This Transmission is Not a True Automatic but the 51 and 57 Tooth PTO Drive Gears are Turning All the Time, Therefore Powershift PTO Models and Non-Shifting or Constant Mesh PTO Models are Recommended.

NOTE: The 51 and 57 Tooth PTO Drive Gears in this Transmission are Idler Gears, Therefore the PTO Output Speeds are the Same on All Three (3) Openings.

NOTE: Left PTO drive gear inside the transmission is not installed as a standard item, and must be present to install PTO to this opening.

(1) Input Gear Part No. 5-P-1100
(2) Input Gear Part No. 5-P-1101
(3) Input Gear Part No. 5-P-1102
(4) Input Gear Part No. 5-P-1103
(5) Input Gear Part No. 5-P-1135
(6) Input Gear Part No. 5-P-1385
(7) Input Gear Part No. 5-P-283
(8) Input Gear Part No. 5-P-285
(9) Input Gear Part No. 5-P-325
(10) Input Gear Part No. 5-P-971
(11) Input Gear Part No. 5-P-980

Parker Hannifin Corporation
Chelsea Products Division
Olive Branch, MS 38654 USA

TH48FT-E80 (OFF Highway Automatic)

BOTTOM SIDE ONLY

TRANSMISSION GEAR DATA:
BOT 08-BOLT Opening Gear FORWARD of Centerline
51 Teeth - SPUR

PITCH LINE TO APERTURE FACE:
0.7846" (19.9000MM)

Caution: Application Approval Required for PTO Output Shaft Speeds Above 2500 RPM

BOTTOM Side PTO Model	Inter. Torq.	Dir. Rot.	Engine %		Filler Block	Adapter Assy.	Stud Kit		Inter. Torq.	Dir. Rot.	Engine %		Filler Block	Adapter Assy.	Stud Kit
			Fwd.	Rev.							Fwd.	Rev.			
ONE SPEED - TWO GEAR - MECHANICAL SHIFT															
823XBAHX-*3 (8)	500	Eng	109				Furnished								
823XDAHX-*3 (10)	500	Eng	129				Furnished								
823XGAHX-*3 (11)	500	Eng	141				Furnished								
823XJAHX-*3 (9)	500	Eng	165				Furnished								
823XMAHX-*3 (7)	500	Eng	194				Furnished								
880XBAHX-*3 (1)	500	Eng	109				Furnished								
880XDAHX-*3 (2)	500	Eng	129				Furnished								
880XGAHX-*3 (5)	500	Eng	141				Furnished								
880XJAHX-*3 (3)	500	Eng	165				Furnished								
880XMAHX-*3 (4)	500	Eng	194				Furnished								
880XQAHX-*3 (6)	450	Eng	227				Furnished								
ONE SPEED - TWO GEAR - POWERSHIFT (AIR)															
885XBAHX-*3 (1)	500	Eng	109				Furnished								
885XGAHX-*3 (5)	500	Eng	141				Furnished								
885XJAHX-*3 (3)	500	Eng	165				Furnished								

NOTE: This Transmission is Not a True Automatic but the 51 and 57 Tooth PTO Drive Gears are Turning All the Time, Therefore Powershift PTO Models and Non-Shifting or Constant Mesh PTO Models are Recommended.

NOTE: The 51 and 57 Tooth PTO Drive Gears in this Transmission are Idler Gears, Therefore the PTO Output Speeds are the Same on All Three (3) Openings.

NOTE: Left PTO drive gear inside the transmission is not installed as a standard item, and must be present to install PTO to this opening.

(1) Input Gear Part No. 5-P-1100
(2) Input Gear Part No. 5-P-1101
(3) Input Gear Part No. 5-P-1102
(4) Input Gear Part No. 5-P-1103
(5) Input Gear Part No. 5-P-1135
(6) Input Gear Part No. 5-P-1385
(7) Input Gear Part No. 5-P-283
(8) Input Gear Part No. 5-P-285
(9) Input Gear Part No. 5-P-325
(10) Input Gear Part No. 5-P-971
(11) Input Gear Part No. 5-P-980

Parker Hannifin Corporation
Chelsea Products Division
Olive Branch, MS 38654 USA

NOTES



Caterpillar

Parker Hannifin Corporation
Chelsea Products Division
Olive Branch, MS 38654 USA

CHELSEA

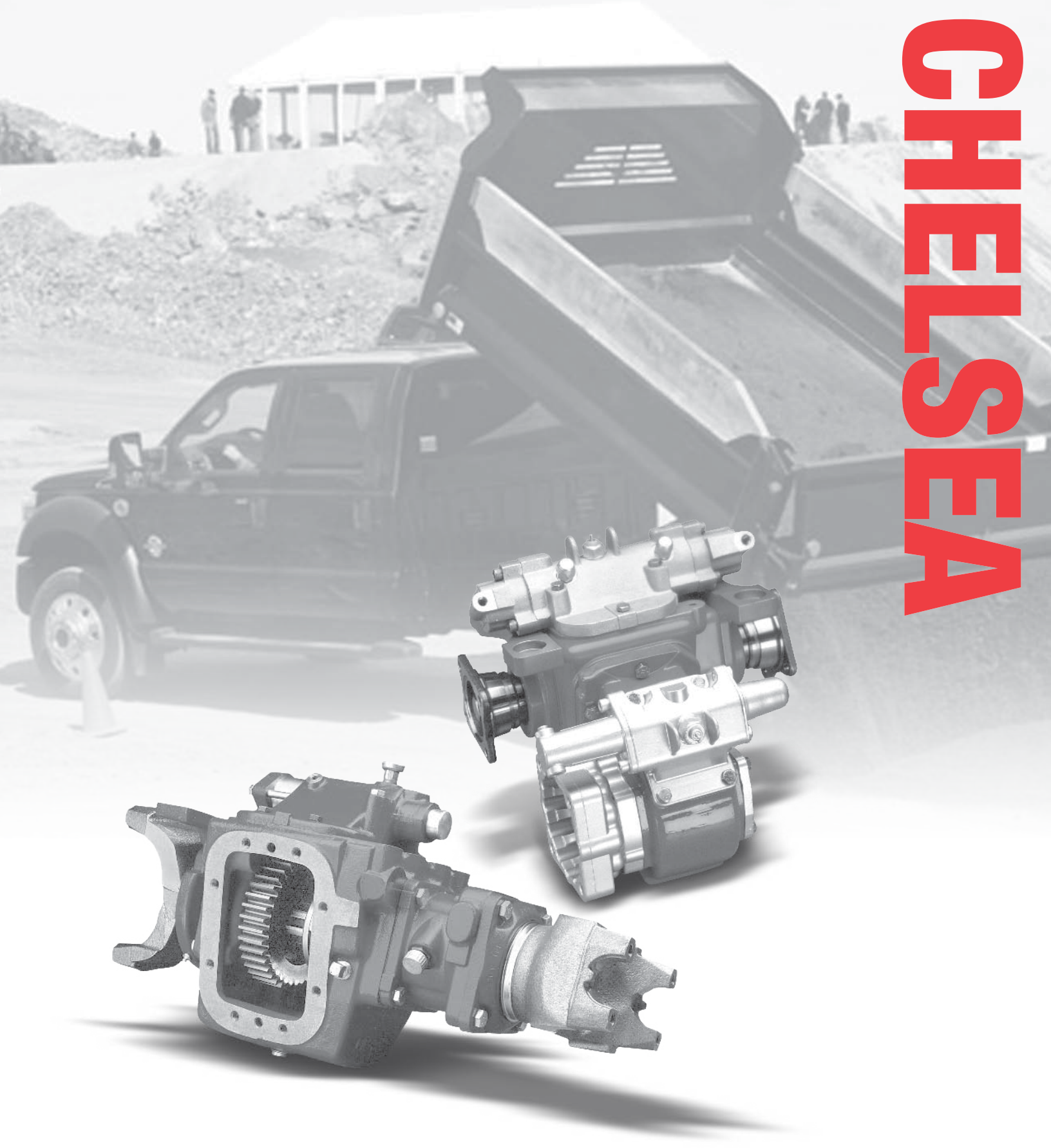

Parker Chelsea

ENGINEERING YOUR SUCCESS.

⚠ WARNING — User Responsibility

FAILURE OR IMPROPER SELECTION OR IMPROPER USE OF THE PRODUCTS DESCRIBED HEREIN OR RELATED ITEMS CAN CAUSE DEATH, PERSONAL INJURY AND PROPERTY DAMAGE.

This document and other information from Parker-Hannifin Corporation, its subsidiaries and authorized distributors provide product or system options for further investigation by users having technical expertise.

The user, through its own analysis and testing, is solely responsible for making the final selection of the system and components and assuring that all performance, endurance, maintenance, safety and warning requirements of the application are met. The user must analyze all aspects of the application, follow applicable industry standards, and follow the information concerning the product in the current product catalog and in any other materials provided from Parker or its subsidiaries or authorized distributors.

To the extent that Parker or its subsidiaries or authorized distributors provide component or system options based upon data or specifications provided by the user, the user is responsible for determining that such data and specifications are suitable and sufficient for all applications and reasonably foreseeable uses of the components or systems.

Offer of Sale

The items described in this document are hereby offered for sale by Parker Hannifin Corporation, its subsidiaries or its authorized distributors. This offer and its acceptance are governed by the provisions stated in the "Offer of Sale".

© Copyright 2016, Parker Hannifin Corporation, All Rights Reserved

Parker Hannifin Corporation
Chelsea Products Division
Olive Branch, MS 38654 USA

Transmission Make and Model	PTO Appl. Number	Number Forward Speeds	Teeth in PTO Driver
912 AH (Uses 8-Bolt PTOs)	CHL-3	1	L39-R39
912 AH (Uses 8-Bolt PTOs)(Top)	CHL-3A	1	T39
941 (Uses 6-Bolt PTOs)	CHL-4	1	L23-R23

IMPORTANT: See Safety Information in Section 1 of the Chelsea Applications catalog HY25-3000/US.

Transmission PTO Driver & Apertures (Viewed from Rear of Transmission)

L-Left Side R-Right Side B-Bottom Side T-Top Side CS-Countershaft

For transmissions not listed, contact your authorized Chelsea Distributor.

Parker Hannifin Corporation
Chelsea Products Division
Olive Branch, MS 38654 USA

912 AH (Uses 8-Bolt PTOs)

LEFT SIDE ONLY

TRANSMISSION GEAR DATA:
L.S. 08-BOLT Opening Gear FORWARD of Centerline
39 Teeth - SPUR

PITCH LINE TO APERTURE FACE:
0.8100" (20.5700MM)

RIGHT SIDE ONLY

TRANSMISSION GEAR DATA:
R.S. 08-BOLT Opening Gear FORWARD of Centerline
39 Teeth - SPUR

PITCH LINE TO APERTURE FACE:
0.8100" (20.5700MM)

Caution: Application Approval Required for PTO Output Shaft Speeds Above 2500 RPM

ONE SPEED - TWO GEAR - MECHANICAL SHIFT

LEFT Side PTO Model	Inter. Torq.	Dir. Rot.	Engine % Fwd.	Engine % Rev.	Filler Block	Adapter Assy.	Stud Kit	RIGHT Side PTO Model	Inter. Torq.	Dir. Rot.	Engine % Fwd.	Engine % Rev.	Filler Block	Adapter Assy.	Stud Kit
221ZCAHX-*5	250	Eng	72		7-A-032(P)(26)	328564X	Furnished	221ZCAHX-*3	250	Eng	72		7-A-032(P)(26)	328564X	Furnished
221ZEAHX-*5	250	Eng	84			328564X	Furnished	221ZEAHX-*3	250	Eng	84			328564X	Furnished
221ZLAHX-*5	200	Eng	112			328564X	Furnished	221ZLAHX-*3	200	Eng	112			328564X	Furnished
221ZPAHX-*5	200	Eng	136			328564X	Furnished	221ZPAHX-*3	200	Eng	136			328564X	Furnished
489XFAHX-*5 (2)	250	Eng	101				Furnished	489XFAHX-*3 (2)	250	Eng	101				Furnished
489XHAHX-*5 (13)	250	Eng	117				Furnished	489XHAHX-*3 (13)	250	Eng	117				Furnished
489XLAHX-*5 (1)	250	Eng	130				Furnished	489XLAHX-*3 (1)	250	Eng	130				Furnished
489XQAHX-*5 (1)	225	Eng	140				Furnished	489XQAHX-*3 (1)	225	Eng	140				Furnished
489XRAHX-*5 (1)	225	Eng	162				Furnished	489XRAHX-*3 (1)	225	Eng	162				Furnished
489XSAHX-*5 (1)	200	Eng	193				Furnished	489XSAHX-*3 (1)	200	Eng	193				Furnished
489XUAHX-*5 (1)	195	Eng	230				Furnished	489XUAHX-*3 (1)	195	Eng	230				Furnished
489XWAHX-*5 (1)	175	Eng	271				Furnished	489XWAHX-*3 (1)	175	Eng	271				Furnished
489XXAHX-*5 (1)	140	Eng	321				Furnished	489XXAHX-*3 (1)	140	Eng	321				Furnished
680XFAHX-*5 (10)	375	Eng	101				Furnished	680XFAHX-*3 (10)	375	Eng	101				Furnished
680XHAHX-*5 (17)	375	Eng	117				Furnished	680XHAHX-*3 (17)	375	Eng	117				Furnished
680XQAHX-*5 (11)	375	Eng	140				Furnished	680XQAHX-*3 (11)	375	Eng	140				Furnished
680XRAHX-*5 (16)	350	Eng	162				Furnished	680XRAHX-*3 (16)	350	Eng	162				Furnished
680XSAHX-*5 (12)	325	Eng	193				Furnished	680XSAHX-*3 (12)	325	Eng	193				Furnished
823XBAHX-*5 (20)	750	Eng	69				Furnished	823XBAHX-*3 (20)	750	Eng	69				Furnished
823XDAHX-*5 (24)	750	Eng	81				Furnished	823XDAHX-*3 (24)	750	Eng	81				Furnished
823XGAHX-*5 (25)	750	Eng	88				Furnished	823XGAHX-*3 (25)	750	Eng	88				Furnished
823XJAHX-*5 (21)	750	Eng	104				Furnished	823XJAHX-*3 (21)	750	Eng	104				Furnished
823XMAHX-*5 (19)	650	Eng	122				Furnished	823XMAHX-*3 (19)	650	Eng	122				Furnished
823XRAHX-*5 (23)	400	Eng	168				Furnished	823XRAHX-*3 (23)	400	Eng	168				Furnished
823XTKTX-*5 (15)	350	Eng	204		8-A-165(26)		Furnished	823XTKTX-*3 (15)	350	Eng	204		8-A-165(26)		Furnished
880XBAHX-*5 (3)	500	Eng	69				Furnished	880XBAHX-*3 (3)	500	Eng	69				Furnished
880XDAHX-*5 (4)	500	Eng	81				Furnished	880XDAHX-*3 (4)	500	Eng	81				Furnished
880XGAHX-*5 (9)	500	Eng	88				Furnished	880XGAHX-*3 (9)	500	Eng	88				Furnished
880XJAHX-*5 (5)	500	Eng	104				Furnished	880XJAHX-*3 (5)	500	Eng	104				Furnished
880XMAHX-*5 (6)	500	Eng	122				Furnished	880XMAHX-*3 (6)	500	Eng	122				Furnished
880XQAHX-*5 (14)	450	Eng	142				Furnished	880XQAHX-*3 (14)	450	Eng	142				Furnished

Continued Next Page

CAUTION: Do not use 442/489 "A" or "C" ratios on Chelsea split shafts if final rotation is "ENG".

CAUTION: 660/680 Series: Applications above 1500 RPM output shaft speed, contact Chelsea Technical Service for approval. DO NOT use Standard Geared Adapters w/660 Series, contact Chelsea Technical Service.

NOTE: If two or three 8 bolt PTOs are to be mounted on split shaft use stud kit 328170-190X to prevent thread interference.

NOTE: The AK & XK output flanges can not be used with the "A" & "C" ratios on the 489 Series PTOs due to mounting stud interference. Use a RA or RB rotatable flange for the XK and the RA for the AK flange.

NOTE: 282 Series stated torque values on this page are for Intermittent and Continuous Duty Applications.

(1) Input Gear Part No. 5-P-1004
(2) Input Gear Part No. 5-P-1077
(3) Input Gear Part No. 5-P-1100
(4) Input Gear Part No. 5-P-1101
(5) Input Gear Part No. 5-P-1102
(6) Input Gear Part No. 5-P-1103
(9) Input Gear Part No. 5-P-1135
(10) Input Gear Part No. 5-P-1242
(11) Input Gear Part No. 5-P-1246
(12) Input Gear Part No. 5-P-1322
(13) Input Gear Part No. 5-P-1364
(14) Input Gear Part No. 5-P-1385
(15) Input Gear Part No. 5-P-1395
(16) Input Gear Part No. 5-P-1441
(17) Input Gear Part No. 5-P-1494
(19) Input Gear Part No. 5-P-283
(20) Input Gear Part No. 5-P-285
(21) Input Gear Part No. 5-P-325
(23) Input Gear Part No. 5-P-721
(24) Input Gear Part No. 5-P-971
(25) Input Gear Part No. 5-P-980
(26) Filler block furnished with P.T.O.

Parker Hannifin Corporation
Chelsea Products Division
Olive Branch, MS 38654 USA

912 AH (Uses 8-Bolt PTOs)

LEFT SIDE ONLY

TRANSMISSION GEAR DATA:
L.S. 08-BOLT Opening Gear FORWARD of Centerline
39 Teeth - SPUR

PITCH LINE TO APERTURE FACE:
0.8100" (20.5700MM)

RIGHT SIDE ONLY

TRANSMISSION GEAR DATA:
R.S. 08-BOLT Opening Gear FORWARD of Centerline
39 Teeth - SPUR

PITCH LINE TO APERTURE FACE:
0.8100" (20.5700MM)

Caution: Application Approval Required for PTO Output Shaft Speeds Above 2500 RPM

LEFT Side PTO Model	Inter. Torq.	Dir. Rot.	Engine % Fwd.	Engine % Rev.	Filler Block	Adapter Assy.	Stud Kit	RIGHT Side PTO Model	Inter. Torq.	Dir. Rot.	Engine % Fwd.	Engine % Rev.	Filler Block	Adapter Assy.	Stud Kit
ONE SPEED - TWO GEAR - MECHANICAL SHIFT															
880XRAHX-*5 (7)	400	Eng	168				Furnished	880XRAHX-*3 (7)	400	Eng	168				Furnished
880XTAHX-*5 (8)	350	Eng	217				Furnished	880XTAHX-*3 (8)	350	Eng	217				Furnished
ONE SPEED - TWO GEAR POWERSHIFT (AIR OR HYDRAULIC)															
282XBAJX-*5 (18)	250	Eng	69					282XBAJX-*3 (18)	250	Eng	69				
282XCAJX-*5 (18)	250	Eng	83					282XCAJX-*3 (18)	250	Eng	83				
282XDAJX-*5 (18)	250	Eng	99					282XDAJX-*3 (18)	250	Eng	99				
282XGAJX-*5 (18)	250	Eng	118					282XGAJX-*3 (18)	250	Eng	118				
282XKAJX-*5 (18)	250	Eng	132					282XKAJX-*3 (18)	250	Eng	132				
282XMAJX-*5 (18)	250	Eng	148					282XMAJX-*3 (18)	250	Eng	148				
282XPAJX-*5 (18)	250	Eng	165					282XPAJX-*3 (18)	250	Eng	165				
282XSAJX-*5 (18)	225	Eng	184					282XSAJX-*3 (18)	225	Eng	184				
282XTAJX-*5 (18)	225	Eng	206					282XTAJX-*3 (18)	225	Eng	206				
ONE SPEED - TWO GEAR - POWERSHIFT (AIR)															
230XAAJX-*5	250	Eng	53		7-A-032(P)	328481X	Furnished	230XAAJX-*3	250	Eng	53		7-A-032(P)	328481X	Furnished
230XBAJX-*5	250	Eng	69		7-A-032(P)	328481X	Furnished	230XBAJX-*3	250	Eng	69		7-A-032(P)	328481X	Furnished
230XDAJX-*5	250	Eng	80		7-A-032(P)	328481X	Furnished	230XDAJX-*3	250	Eng	80		7-A-032(P)	328481X	Furnished
230XKAJX-*5	250	Eng	108		7-A-032(P)	328481X	Furnished	230XKAJX-*3	250	Eng	108		7-A-032(P)	328481X	Furnished
230XQAJX-*5	250	Eng	143		7-A-032(P)	328481X	Furnished	230XQAJX-*3	250	Eng	143		7-A-032(P)	328481X	Furnished
230XUAJX-*5	225	Eng	229		7-A-032(P)	328481X	Furnished	230XUAJX-*3	225	Eng	229		7-A-032(P)	328481X	Furnished
238XAAHX-*5 (1)	250	Eng	70				Furnished	238XAAHX-*3 (1)	250	Eng	70				Furnished
238XDAHX-*5 (1)	250	Eng	105				Furnished	238XDAHX-*3 (1)	250	Eng	105				Furnished
238XKAHX-*5 (1)	250	Eng	135				Furnished	238XKAHX-*3 (1)	250	Eng	135				Furnished
238XQAHX-*5 (1)	250	Eng	182				Furnished	238XQAHX-*3 (1)	250	Eng	182				Furnished
238XUAHX-*5 (1)	225	Eng	209				Furnished	238XUAHX-*3 (1)	225	Eng	209				Furnished
885XBAHX-*5 (3)	500	Eng	69				Furnished	885XBAHX-*3 (3)	500	Eng	69				Furnished
885XGAHX-*5 (9)	500	Eng	88				Furnished	885XGAHX-*3 (9)	500	Eng	88				Furnished
885XJAHX-*5 (5)	500	Eng	104				Furnished	885XJAHX-*3 (5)	500	Eng	104				Furnished
885XMAHX-*5 (6)	500	Eng	122				Furnished	885XMAHX-*3 (6)	500	Eng	122				Furnished

Continued Next Page

CAUTION: Do not use 442/489 "A" or "C" ratios on Chelsea split shafts if final rotation is "ENG".

CAUTION: 660/680 Series: Applications above 1500 RPM output shaft speed, contact Chelsea Technical Service for approval. DO NOT use Standard Geared Adapters w/660 Series, contact Chelsea Technical Service.

NOTE: If two or three 8 bolt PTOs are to be mounted on split shaft use stud kit 328170-190X to prevent thread interference.

NOTE: The AK & XK output flanges can not be used with the "A" & "C" ratios on the 489 Series PTOs due to mounting stud interference. Use a RA or RB rotatable flange for the XK and the RA for the AK flange.

NOTE: 282 Series stated torque values on this page are for Intermittent and Continuous Duty Applications.

(1) Input Gear Part No. 5-P-1004
(3) Input Gear Part No. 5-P-1100
(5) Input Gear Part No. 5-P-1102
(6) Input Gear Part No. 5-P-1103
(7) Input Gear Part No. 5-P-1104
(8) Input Gear Part No. 5-P-1105
(9) Input Gear Part No. 5-P-1135
(18) Input Gear Part No. 5-P-1510

Parker Hannifin Corporation
Chelsea Products Division
Olive Branch, MS 38654 USA

912 AH (Uses 8-Bolt PTOs)

LEFT SIDE ONLY

TRANSMISSION GEAR DATA:
L.S. 08-BOLT Opening Gear FORWARD of Centerline
39 Teeth - SPUR

PITCH LINE TO APERTURE FACE:
0.8100" (20.5700MM)

RIGHT SIDE ONLY

TRANSMISSION GEAR DATA:
R.S. 08-BOLT Opening Gear FORWARD of Centerline
39 Teeth - SPUR

PITCH LINE TO APERTURE FACE:
0.8100" (20.5700MM)

Caution: Application Approval Required for PTO Output Shaft Speeds Above 2500 RPM

LEFT Side PTO Model	Inter. Torq.	Dir. Rot.	Engine % Fwd.	Engine % Rev.	Filler Block	Adapter Assy.	Stud Kit	RIGHT Side PTO Model	Inter. Torq.	Dir. Rot.	Engine % Fwd.	Engine % Rev.	Filler Block	Adapter Assy.	Stud Kit
ONE SPEED - FORWARD & REVERSE															
348XFAHX-*5 (22)	200	Eng	88	92			Furnished	348XFAHX-*5 (22)	200	Eng	88	92			Furnished
352ZSAHX-*5 (1)	140	Eng	196	254		328564X	Furnished	352ZSAHX-*5 (1)	140	Eng	196	254		328564X	Furnished
863XBAHX-*5	500	Eng	69	85			Furnished	863XBAHX-*5	500	Eng	69	85			Furnished
GEARED ADAPTERS															
628XAHX-4AH	250	Eng	0				Furnished	628XAHX-3AH	250	Eng	0				Furnished

CAUTION: Do not use 442/489 "A" or "C" ratios on Chelsea split shafts if final rotation is "ENG".

CAUTION: 660/680 Series: Applications above 1500 RPM output shaft speed, contact Chelsea Technical Service for approval. DO NOT use Standard Geared Adapters w/660 Series, contact Chelsea Technical Service.

NOTE: If two or three 8 bolt PTOs are to be mounted on split shaft use stud kit 328170-190X to prevent thread interference.

NOTE: The AK & XK output flanges can not be used with the "A" & "C" ratios on the 489 Series PTOs due to mounting stud interference. Use a RA or RB rotatable flange for the XK and the RA for the AK flange.

NOTE: 282 Series stated torque values on this page are for Intermittent and Continuous Duty Applications.

(1) Input Gear Part No. 5-P-1004
(22) Input Gear Part No. 5-P-581

Parker Hannifin Corporation
Chelsea Products Division
Olive Branch, MS 38654 USA

912 AH (Uses 8-Bolt PTOs)(Top)

TOP SIDE ONLY

TRANSMISSION GEAR DATA:
TOP 08-BOLT Opening Gear FORWARD of Centerline
39 Teeth - SPUR

PITCH LINE TO APERTURE FACE:
0.8100" (20.5700MM)

Caution: Application Approval Required for PTO Output Shaft Speeds Above 2500 RPM

TOP Side PTO Model	Inter. Torq.	Dir. Rot.	Engine % Fwd.	Engine % Rev.	Filler Block	Adapter Assy.	Stud Kit		Inter. Torq.	Dir. Rot.	Engine % Fwd.	Engine % Rev.	Filler Block	Adapter Assy.	Stud Kit
ONE SPEED - TWO GEAR - MECHANICAL SHIFT															
489XFAHP-*3 (2)	250	Eng	101				Furnished								
489XHAHP-*3 (13)	250	Eng	117				Furnished								
489XLAHP-*3 (1)	250	Eng	130				Furnished								
489XQAHP-*3 (1)	225	Eng	140				Furnished								
489XRAHP-*3 (1)	225	Eng	162				Furnished								
489XSAHP-*3 (1)	200	Eng	193				Furnished								
489XUAHP-*3 (1)	195	Eng	230				Furnished								
489XWAHP-*3 (1)	175	Eng	271				Furnished								
489XXAHP-*3 (1)	140	Eng	321				Furnished								
680XFAHP-*3 (10)	375	Eng	101				Furnished								
680XHAHP-*3 (16)	375	Eng	117				Furnished								
680XQAHP-*3 (11)	375	Eng	140				Furnished								
680XRAHP-*3 (15)	350	Eng	350				Furnished								
680XSAHP-*3 (12)	325	Eng	193				Furnished								
880XBAHP-*3 (3)	500	Eng	69				Furnished								
880XDAHP-*3 (4)	500	Eng	81				Furnished								
880XGAHP-*3 (9)	500	Eng	88				Furnished								
880XJAHP-*3 (5)	500	Eng	104				Furnished								
880XMAHP-*3 (6)	500	Eng	122				Furnished								
880XQAHP-*3 (14)	450	Eng	142				Furnished								
880XRAHP-*3 (7)	400	Eng	168				Furnished								
880XTAHP-*3 (8)	350	Eng	217				Furnished								

CAUTION: Do not use 442/489 "A" or "C" ratios on Chelsea split shafts if final rotation is "ENG".

CAUTION: 660/680 Series: Applications above 1500 RPM output shaft speed, contact Chelsea Technical Service for approval. DO NOT use Standard Geared Adapters w/660 Series, contact Chelsea Technical Service.

NOTE: PTOs for this application must be ordered with "L" output designator for self lube option. EX: 442XFAHP-W3LD for self lube with a 1.25" std. output.

NOTE: Pressure lube installation kits must be ordered separately. 880 Series PTOs use kit 329110-1X, all other models use 329110X.

NOTE: If two or three 8 bolt PTOs are to be mounted on split shaft, use stud kit 328170-190X to prevent thread interference.

NOTE: The AK & XK output flanges can not be used with the "A" & "C" ratios on the 489 Series PTOs due to mounting stud interference. Use a RA or RB rotatable flange for the XK and the RA for the AK flange.

(1) Input Gear Part No. 5-P-1004
(2) Input Gear Part No. 5-P-1077
(3) Input Gear Part No. 5-P-1100
(4) Input Gear Part No. 5-P-1101
(5) Input Gear Part No. 5-P-1102
(6) Input Gear Part No. 5-P-1103
(7) Input Gear Part No. 5-P-1104
(8) Input Gear Part No. 5-P-1105
(9) Input Gear Part No. 5-P-1135
(10) Input Gear Part No. 5-P-1242
(11) Input Gear Part No. 5-P-1246
(12) Input Gear Part No. 5-P-1322
(13) Input Gear Part No. 5-P-1364
(14) Input Gear Part No. 5-P-1385
(15) Input Gear Part No. 5-P-1441
(16) Input Gear Part No. 5-P-1494

Parker Hannifin Corporation
Chelsea Products Division
Olive Branch, MS 38654 USA

941 (Uses 6-Bolt PTOs)

LEFT SIDE ONLY

TRANSMISSION GEAR DATA:
L.S. 06-BOLT Opening Gear FORWARD of Centerline
23 Teeth - SPUR

PITCH LINE TO APERTURE FACE:
1.1250" (28.5750MM)

RIGHT SIDE ONLY

TRANSMISSION GEAR DATA:
R.S. 06-BOLT Opening Gear FORWARD of Centerline
23 Teeth - SPUR

PITCH LINE TO APERTURE FACE:
1.1250" (28.5750MM)

Caution: Application Approval Required for PTO Output Shaft Speeds Above 2500 RPM

LEFT Side PTO Model	Inter. Torq.	Dir. Rot.	Engine % Fwd.	Engine % Rev.	Filler Block	Adapter Assy.	Stud Kit	RIGHT Side PTO Model	Inter. Torq.	Dir. Rot.	Engine % Fwd.	Engine % Rev.	Filler Block	Adapter Assy.	Stud Kit
ONE SPEED - TWO GEAR - MECHANICAL SHIFT															
221XCAHX-*3	250	Eng	43		7-A-032(11)		Furnished	221XCAHX-*3	250	Eng	43		7-A-032(11)		Furnished
221XEAHX-*3	250	Eng	49				Furnished	221XEAHX-*3	250	Eng	49				Furnished
221XLAHX-*3	200	Eng	66				Furnished	221XLAHX-*3	200	Eng	66				Furnished
221XPAHX-*3	200	Eng	80				Furnished	221XPAHX-*3	200	Eng	80				Furnished
442XFAHX-*3 (2)	250	Eng	59				Furnished	442XFAHX-*3 (2)	250	Eng	59				Furnished
442XHAHX-*3 (6)	250	Eng	68				Furnished	442XHAHX-*3 (6)	250	Eng	68				Furnished
442XLAHX-*3 (1)	250	Eng	77				Furnished	442XLAHX-*3 (1)	250	Eng	77				Furnished
442XQAHX-*3 (1)	225	Eng	83				Furnished	442XQAHX-*3 (1)	225	Eng	83				Furnished
442XRAHX-*3 (1)	225	Eng	96				Furnished	442XRAHX-*3 (1)	225	Eng	96				Furnished
442XSAHX-*3 (1)	200	Eng	114				Furnished	442XSAHX-*3 (1)	200	Eng	114				Furnished
442XUAHX-*3 (1)	195	Eng	136				Furnished	442XUAHX-*3 (1)	135	Eng	136				Furnished
442XWAHX-*3 (1)	175	Eng	160				Furnished	442XWAHX-*3 (1)	175	Eng	160				Furnished
442XXAHX-*3 (1)	140	Eng	189				Furnished	442XXAHX-*3 (1)	140	Eng	189				Furnished
660XFAHX-*3 (3)	375	Eng	59				Furnished	660XFAHX-*3 (3)	375	Eng	59				Furnished
660XHAHX-*3 (6)	375	Eng	68				Furnished	660XHAHX-*3 (6)	375	Eng	68				Furnished
660XQAHX-*3 (4)	375	Eng	83				Furnished	660XQAHX-*3 (4)	375	Eng	83				Furnished
660XRAHX-*3 (7)	350	Eng	96				Furnished	660XRAHX-*3 (7)	350	Eng	96				Furnished
660XSAHX-*3 (5)	325	Eng	114				Furnished	660XSAHX-*3 (5)	325	Eng	114				Furnished
ONE SPEED - TWO GEAR POWERSHIFT (AIR OR HYDRAULIC)															
272XAAJX-*5 (9)	250	Eng	33					272XAAJX-*3 (9)	250	Eng	33				
272XBAJX-*5 (9)	250	Eng	40					272XBAJX-*3 (9)	250	Eng	40				
272XCAJX-*5 (9)	250	Eng	49					272XCAJX-*3 (9)	250	Eng	49				
272XDAJX-*5 (9)	250	Eng	59					272XDAJX-*3 (9)	250	Eng	59				
272XGAJX-*5 (9)	250	Eng	70					272XGAJX-*3 (9)	250	Eng	70				
272XKAJX-*5 (9)	250	Eng	78					272XKAJX-*3 (9)	250	Eng	78				
272XMAJX-*5 (9)	250	Eng	87					272XMAJX-*3 (9)	250	Eng	87				
272XPAJX-*5 (9)	250	Eng	97					272XPAJX-*3 (9)	250	Eng	97				
272XSAJX-*5 (9)	225	Eng	109					272XSAJX-*3 (9)	225	Eng	109				
ONE SPEED - TWO GEAR - POWERSHIFT (AIR)															
230XAAJX-*3	250	Eng	31				Furnished	230XAAJX-*3	250	Eng	31				Furnished

Continued Next Page

CAUTION: Do not use 442/489 "A" or "C" ratios on Chelsea split shafts if final rotation is "ENG".

CAUTION: 660/680 Series: Applications above 1500 RPM output shaft speed, contact Chelsea Technical Service for approval. DO NOT use Standard Geared Adapters w/660 Series, contact Chelsea Technical Service.

NOTE: 272 Series stated torque values on this page are for Intermittent and Continuous Duty Applications.

(1) Input Gear Part No. 5-P-1004
(2) Input Gear Part No. 5-P-1077
(3) Input Gear Part No. 5-P-1242
(4) Input Gear Part No. 5-P-1246
(5) Input Gear Part No. 5-P-1322
(6) Input Gear Part No. 5-P-1364
(7) Input Gear Part No. 5-P-1441
(9) Input Gear Part No. 5-P-1510
(11) Filler block furnished with P.T.O.

Parker Hannifin Corporation
Chelsea Products Division
Olive Branch, MS 38654 USA

941 (Uses 6-Bolt PTOs)

LEFT SIDE ONLY

TRANSMISSION GEAR DATA:
L.S. 06-BOLT Opening Gear FORWARD of Centerline
23 Teeth - SPUR

PITCH LINE TO APERTURE FACE:
1.1250" (28.5750MM)

RIGHT SIDE ONLY

TRANSMISSION GEAR DATA:
R.S. 06-BOLT Opening Gear FORWARD of Centerline
23 Teeth - SPUR

PITCH LINE TO APERTURE FACE:
1.1250" (28.5750MM)

Caution: Application Approval Required for PTO Output Shaft Speeds Above 2500 RPM

ONE SPEED - TWO GEAR - POWERSHIFT (AIR)

LEFT Side PTO Model	Inter. Torq.	Dir. Rot.	Engine % Fwd.	Engine % Rev.	Filler Block	Adapter Assy.	Stud Kit	RIGHT Side PTO Model	Inter. Torq.	Dir. Rot.	Engine % Fwd.	Engine % Rev.	Filler Block	Adapter Assy.	Stud Kit
230XBAJX-*3	250	Eng	41				Furnished	230XBAJX-*3	250	Eng	41				Furnished
230XDAJX-*3	250	Eng	47				Furnished	230XDAJX-*3	250	Eng	47				Furnished
230XKAJX-*3	250	Eng	64				Furnished	230XKAJX-*3	250	Eng	64				Furnished
230XQAJX-*3	250	Eng	85				Furnished	230XQAJX-*3	250	Eng	85				Furnished
230XUAJX-*3	225	Eng	135				Furnished	230XUAJX-*3	225	Eng	135				Furnished
236XAAHX-*3 (8)	250	Eng	41				Furnished	236XAAHX-*3 (8)	250	Eng	41				Furnished
236XDAHX-*3 (1)	250	Eng	62				Furnished	236XDAHX-*3 (1)	250	Eng	62				Furnished
236XKAHX-*3 (1)	250	Eng	80				Furnished	236XKAHX-*3 (1)	250	Eng	80				Furnished
236XQAHX-*3 (1)	250	Eng	107				Furnished	236XQAHX-*3 (1)	250	Eng	107				Furnished
236XUAHX-*3 (1)	225	Eng	123				Furnished	236XUAHX-*3 (1)	225	Eng	123				Furnished

Continued Next Page

CAUTION: Do not use 442/489 "A" or "C" ratios on Chelsea split shafts if final rotation is "ENG".

CAUTION: 660/680 Series: Applications above 1500 RPM output shaft speed, contact Chelsea Technical Service for approval. DO NOT use Standard Geared Adapters w/660 Series, contact Chelsea Technical Service.

NOTE: 272 Series stated torque values on this page are for Intermittent and Continuous Duty Applications.

(1) Input Gear Part No. 5-P-1004
(8) Input Gear Part No. 5-P-1486

Parker Hannifin Corporation
Chelsea Products Division
Olive Branch, MS 38654 USA

941 (Uses 6-Bolt PTOs)

LEFT SIDE ONLY

TRANSMISSION GEAR DATA:
L.S. 06-BOLT Opening Gear FORWARD of Centerline
23 Teeth - SPUR

PITCH LINE TO APERTURE FACE:
1.1250" (28.5750MM)

RIGHT SIDE ONLY

TRANSMISSION GEAR DATA:
R.S. 06-BOLT Opening Gear FORWARD of Centerline
23 Teeth - SPUR

PITCH LINE TO APERTURE FACE:
1.1250" (28.5750MM)

Caution: Application Approval Required for PTO Output Shaft Speeds Above 2500 RPM

LEFT Side PTO Model	Inter. Torq.	Dir. Rot.	Engine % Fwd.	Engine % Rev.	Filler Block	Adapter Assy.	Stud Kit	RIGHT Side PTO Model	Inter. Torq.	Dir. Rot.	Engine % Fwd.	Engine % Rev.	Filler Block	Adapter Assy.	Stud Kit
ONE SPEED - FORWARD & REVERSE															
340XFAHX-*5 (10)	200	Eng	52	54	7-A-140(11)		Furnished	340XFAHX-*5 (10)	200	Eng	52	54	7-A-140(11)		Furnished
352XSAHX-*3 (1)	140	Eng	116	150			Furnished	352XSAHX-*3 (1)	140	Eng	116	150			Furnished
GEARED ADAPTERS															
626XAHX-4AH	250	Eng	0				Furnished	626XAHX-3AH	250	Eng	0				Furnished
630XAHX-4AH	250	Eng	0				Furnished	630XAHX-3AH	250	Eng	0				Furnished
645XAHX-4AH	250	Eng	0				Furnished	645XAHX-3AH	250	Eng	0				Furnished

CAUTION: Do not use 442/489 "A" or "C" ratios on Chelsea split shafts if final rotation is "ENG".

CAUTION: 660/680 Series: Applications above 1500 RPM output shaft speed, contact Chelsea Technical Service for approval. DO NOT use Standard Geared Adapters w/660 Series, contact Chelsea Technical Service.

NOTE: 272 Series stated torque values on this page are for Intermittent and Continuous Duty Applications.

(1) Input Gear Part No. 5-P-1004
(10) Input Gear Part No. 5-P-581
(11) Filler block furnished with P.T.O.

Parker Hannifin Corporation
Chelsea Products Division
Olive Branch, MS 38654 USA

DODGE/RAM

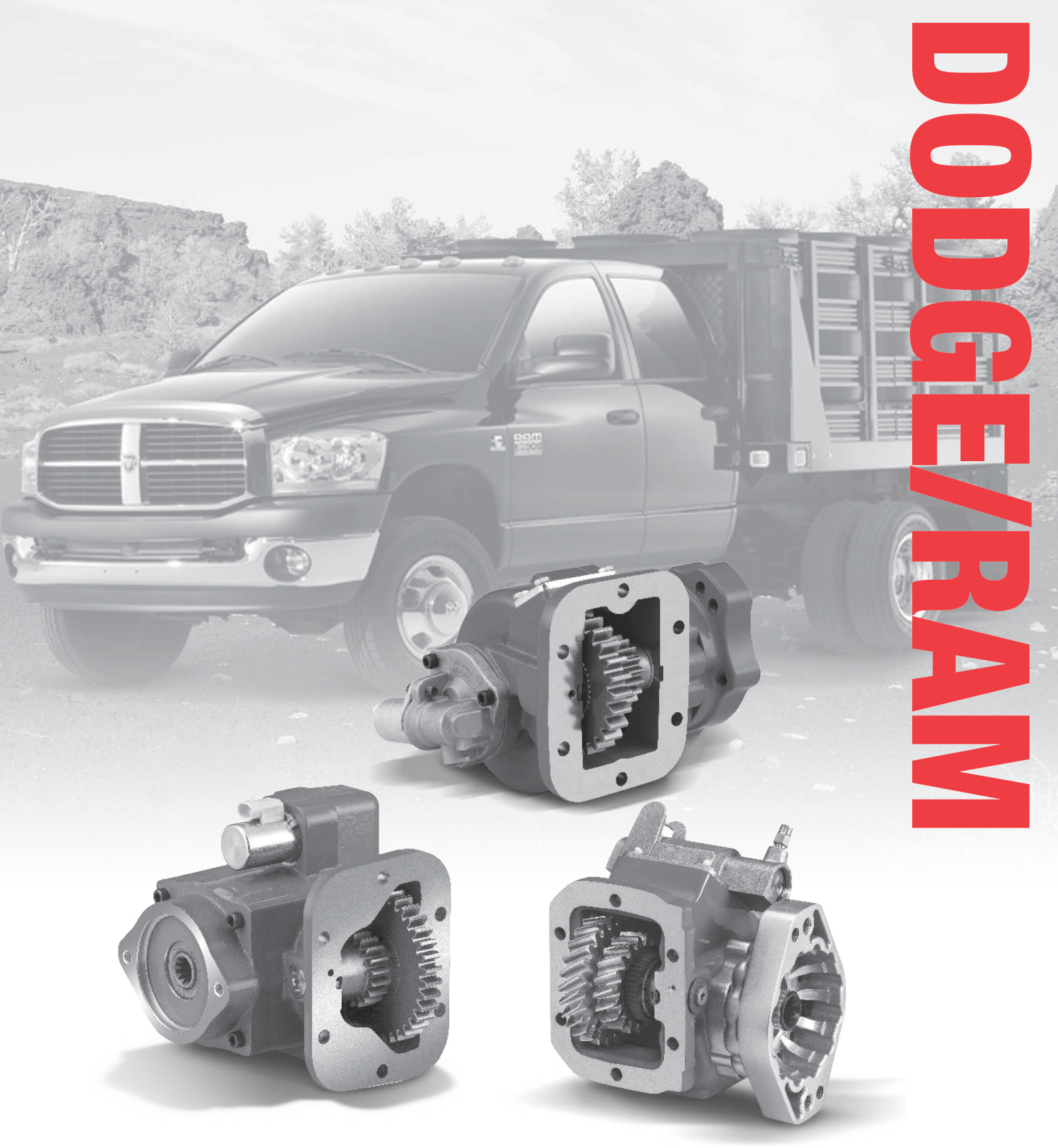

Parker | Chelsea

ENGINEERING YOUR SUCCESS.

Dodge/RAM

⚠ WARNING — User Responsibility

FAILURE OR IMPROPER SELECTION OR IMPROPER USE OF THE PRODUCTS DESCRIBED HEREIN OR RELATED ITEMS CAN CAUSE DEATH, PERSONAL INJURY AND PROPERTY DAMAGE.

This document and other information from Parker-Hannifin Corporation, its subsidiaries and authorized distributors provide product or system options for further investigation by users having technical expertise.

The user, through its own analysis and testing, is solely responsible for making the final selection of the system and components and assuring that all performance, endurance, maintenance, safety and warning requirements of the application are met. The user must analyze all aspects of the application, follow applicable industry standards, and follow the information concerning the product in the current product catalog and in any other materials provided from Parker or its subsidiaries or authorized distributors.

To the extent that Parker or its subsidiaries or authorized distributors provide component or system options based upon data or specifications provided by the user, the user is responsible for determining that such data and specifications are suitable and sufficient for all applications and reasonably foreseeable uses of the components or systems.

Offer of Sale

The items described in this document are hereby offered for sale by Parker Hannifin Corporation, its subsidiaries or its authorized distributors. This offer and its acceptance are governed by the provisions stated in the "Offer of Sale".

© Copyright 2016, Parker Hannifin Corporation, All Rights Reserved

Parker Hannifin Corporation
Chelsea Products Division
Olive Branch, MS 38654 USA

Transmission Make and Model	PTO Appl. Number	Number Forward Speeds	Teeth in PTO Driver
AS66RC (MY2014 & Later) Gas	DDG-3	6	L69-R69
AS68RC (MY2010 & Prior)	DDG-1	6	R69
AS68RC (MY2011 & 2012))	DDG-1A	6	R69
AS69RC (MY2013 and Later) Diesel	DDG-3	6	L69-R69
G56 (Dodge/RAM Cab Chassis w/Manual)	DDG-2	6	L52-R52

IMPORTANT: See Safety Information in Section 1 of the Chelsea Applications catalog HY25-3000/US.

Transmission PTO Driver & Apertures (Viewed from Rear of Transmission)

L-Left Side R-Right Side B-Bottom Side T-Top Side CS-Countershaft

For transmissions not listed, contact your authorized Chelsea Distributor.

Parker Hannifin Corporation
Chelsea Products Division
Olive Branch, MS 38654 USA

AS68RC (MY2010 & Prior)

RIGHT SIDE ONLY

TRANSMISSION GEAR DATA:
R.S. 06-BOLT Opening Gear FORWARD of Centerline
69 Teeth - SPUR

PITCH LINE TO APERTURE FACE:
1.1200" (28.4480MM)

Caution: Application Approval Required for PTO Output Shaft Speeds Above 2500 RPM

	Inter. Torq.	Dir. Rot.	Engine % Fwd.	Engine % Rev.	Filler Block	Adapter Assy.	Stud Kit	RIGHT Side PTO Model	Inter. Torq.	Dir. Rot.	Engine % Fwd.	Engine % Rev.	Filler Block	Adapter Assy.	Stud Kit
ONE SPEED - TWO GEAR POWERSHIFT (AIR OR HYDRAULIC)															
								272DAKUP-*3	196	Eng	69				Furnished
								272DBKUP-*3	160	Eng	84				Furnished
ONE SPEED - TWO GEAR - POWERSHIFT (HYDRAULIC)															
								252DDKUX-*5 (6)	85	Eng	99				Furnished
								252DMKUX-*5 (7)	50	Eng	144				Furnished
								270DAKUP-*3 (1)	208	Eng	65				Furnished
								270DBKUP-*3 (2)	159	Eng	85				Furnished
								270DDKUP-*3 (3)	138	Eng	98				Furnished
								270DKKUP-*3 (4)	102	Eng	132				Furnished
								270DQKUP-*3 (5)	77	Eng	176				Furnished

See next page for more pump options.

Continued Next Page

CAUTION: It is Required that Chelsea Wiring Harness (329457X) is used for the 270D & 272D and (329621X) is used for the 252D (Model Year 2010 and Prior). This will Allow the ODB II Monitoring System to be Disabled while the PTO System is being Operated. This will Prevent "False" Lighting of the "Check Engine" Lamp due to the Engine-PTO Driven Accessories

NOTE: The PTO output shaft torque ratings are based on the maximum allowable torque at the 69 tooth transmission gear of 135 lbs-ft.

NOTE: When ordering one of the listed PTOs; Hose Kit, Wire Harness Kit and Metric Stud Kit are furnished with the PTO. The hose, wire harness and metric stud kits are required for completing the PTO installation.

NOTE: To install one of the listed PTOs on this truck the exhaust pipe and transmission support must be dropped. Or installed through the passenger side floor "cut out". An OEM installed passenger side floor pan modification "Bulge" cut out must be installed. Order Mopar #82211579 "Patch Panel" Installation Kit if not Installed. Refer to Dodge Body Builders web site for complete details under "Chassis cab PTO Operation & Installation Guide-PTO Installation Alternative".

NOTE: 272 Series stated torque values on this page are for Intermittent and Continuous Duty Applications.

(1) Input Gear Part No. 5-P-1353
(2) Input Gear Part No. 5-P-1354
(3) Input Gear Part No. 5-P-1355
(4) Input Gear Part No. 5-P-1356
(5) Input Gear Part No. 5-P-1359
(6) Input Gear Part No. 5-P-1427
(7) Input Gear Part No. 5-P-1437

Parker Hannifin Corporation
Chelsea Products Division
Olive Branch, MS 38654 USA

AS68RC (MY2010 & Prior)

RIGHT SIDE ONLY

TRANSMISSION GEAR DATA:
R.S. 06-BOLT Opening Gear FORWARD of Centerline
69 Teeth - SPUR

PITCH LINE TO APERTURE FACE:
1.1200" (28.4480MM)

Caution: Application Approval Required for PTO Output Shaft Speeds Above 2500 RPM

	Inter. Torq.	Dir. Rot.	Engine %		Filler Block	Adapter Assy.	Stud Kit	RIGHT Side PTO Model	Inter. Torq.	Dir. Rot.	Engine %		Filler Block	Adapter Assy.	Stud Kit
			Fwd.	Rev.							Fwd.	Rev.			

252 Pumps offered in the PGP511 with 5/8" - 9T or 3/4" - 11T Shaft / SAE "A" Flange

Option Order Code	Chelsea Pump Model	Displacement in³/rev	Displacement Gal/rev	Max Pressure PSI	Max Speed RPM	Shaft Size
1116	CGP-P11C016-1AC	0.37	0.002	3988	4000	5/8" 9T
1121	CGP-P11C021-1AC	0.49	0.002	3988	4000	5/8" 9T
1126	CGP-P11C026-1AC	0.61	0.003	3988	3600	5/8" 9T
1129	CGP-P11C029-1AC	0.67	0.003	3988	3600	5/8" 9T
1137	CGP-P11C037-1AC	0.85	0.004	3988	3300	5/8" 9T
1449	CGP-P31C054-1AE	1.24	0.005	3500	3000	5/8" 9T
1462	CGP-P31C061-1AE	1.40	0.006	3500	3000	5/8" 9T
P37	CGP-P11C037-5AC	0.85	0.004	3988	3300	3/4" 11T
P42	CGP-P11C042-5AC	0.98	0.004	3988	3000	3/4" 11T
P71	CGP-P11C071-5AC	1.65	0.007	2900	2400	3/4" 11T
P82	CGP-P11C082-5AC	1.89	0.008	2465	2300	3/4" 11T

272 Pumps (Ordered Separately)
Pumps offered in the PGM20 with Bi-directional rotation-SAE "B" Shaft / SAE "B" Flange

Chelsea Pump Model	Displacement in³/rev	Displacement Gal/rev	Cont. Pressure PSI	Max Speed RPM	Shaft Size
3089210081	1.97	0.009	3000	2400	7/8" 13T
3089210091	2.46	0.011	3000	2400	7/8" 13T
3089210082	2.96	0.013	3000	2400	7/8" 13T
3089210083	3.45	0.015	2500	2400	7/8" 13T
3089210084	3.94	0.017	2500	2400	7/8" 13T
3089210089	3.94	0.017	2500	2400	7/8" 13T

Parker Hannifin Corporation
Chelsea Products Division
Olive Branch, MS 38654 USA

AS68RC (MY2011 & 2012))

RIGHT SIDE ONLY

TRANSMISSION GEAR DATA:
R.S. 06-BOLT Opening Gear FORWARD of Centerline
69 Teeth - SPUR

PITCH LINE TO APERTURE FACE:
1.1200" (28.4480MM)

Caution: Application Approval Required for PTO Output Shaft Speeds Above 2500 RPM

	Inter. Torq.	Dir. Rot.	Engine % Fwd.	Engine % Rev.	Filler Block	Adapter Assy.	Stud Kit	RIGHT Side PTO Model	Inter. Torq.	Dir. Rot.	Engine % Fwd.	Engine % Rev.	Filler Block	Adapter Assy.	Stud Kit
ONE SPEED - TWO GEAR POWERSHIFT (AIR OR HYDRAULIC)															
								272RAKUP-*3	196	Eng	69				Furnished
								272RBKUP-*3	160	Eng	84				Furnished
ONE SPEED - TWO GEAR - POWERSHIFT (HYDRAULIC)															
								252RDKUX-*5 (6)	85	Eng	99				Furnished
								252RMKUX-*5 (7)	50	Eng	144				Furnished
								270RAKUP-*3 (1)	208	Eng	65				Furnished
								270RBKUP-*3 (2)	159	Eng	85				Furnished
								270RDKUP-*3 (3)	138	Eng	98				Furnished
								270RKKUP-*3 (4)	102	Eng	132				Furnished
								270RQKUP-*3 (5)	77	Eng	176				Furnished

See next page for more pump options.

Continued Next Page

CAUTION: It is Required for MY2011/12 Trucks, the 252R uses Wiring Harness (329663X) and the 270R & 272R uses (329664X). This will Allow the ODB II Monitoring System to be Disabled while the PTO System is being Operated. This will Prevent "False" Lighting of the "Check Engine" Lamp due to the Engine-PTO Driven Accessories

NOTE: For MY2011/12 and later RAM Cab Chassis Trucks, the torque converter locks up at an ENGINE Speed of 1200 RPM and stays on for PTO function to a maximum ENGINE Speed of 2000 RPM. The torque converter will unlock at an ENGINE Speed below 1000 RPM. The default PTO operation ENGINE speed is 900 RPM. Refer to Dodge Body Builders web site for details on raising the ENGINE speeds for PTO operation.

NOTE: The PTO output shaft torque ratings are based on the maximum allowable torque at the 69 tooth transmission gear of 135 lbs-ft.

NOTE: To install the one of the listed PTOs on this truck the exhaust pipe and transmission support must be dropped. Or installed through the passenger side floor "cut out". An OEM installed passenger side floor pan modification "Bulge" cut out must be installed. Order Mopar #82211579 "Patch Panel" Installation Kit if not Installed. Refer to Dodge Body Builders web site for complete details under "Chassis cab PTO Operation & Installation Guide-PTO Installation Alternative".

NOTE: When ordering one of the listed PTOs; Hose Kit, Wire Harness Kit and Metric Stud Kit are furnished with the PTO The hose, wire harness and metric stud kits are required for completing the PTO installation.

NOTE: 272 Series stated torque values on this page are for Intermittent and Continuous Duty Applications.

(1) Input Gear Part No. 5-P-1353
(2) Input Gear Part No. 5-P-1354
(3) Input Gear Part No. 5-P-1355
(4) Input Gear Part No. 5-P-1356
(5) Input Gear Part No. 5-P-1359
(6) Input Gear Part No. 5-P-1427
(7) Input Gear Part No. 5-P-1437

Parker Hannifin Corporation
Chelsea Products Division
Olive Branch, MS 38654 USA

AS68RC (MY2011 & 2012))

RIGHT SIDE ONLY

TRANSMISSION GEAR DATA:
R.S. 06-BOLT Opening Gear FORWARD of Centerline
69 Teeth - SPUR

PITCH LINE TO APERTURE FACE:
1.1200" (28.4480MM)

Caution: Application Approval Required for PTO Output Shaft Speeds Above 2500 RPM

	Inter. Torq.	Dir. Rot.	Engine %		Filler Block	Adapter Assy.	Stud Kit	RIGHT Side PTO Model	Inter. Torq.	Dir. Rot.	Engine %		Filler Block	Adapter Assy.	Stud Kit
			Fwd.	Rev.							Fwd.	Rev.			

252 Pumps offered in the PGP511 with 5/8" - 9T or 3/4" - 11T Shaft / SAE "A" Flange

Option Order Code	Chelsea Pump Model	Displacement in³/rev	Displacement Gal/rev	Max Pressure PSI	Max Speed RPM	Shaft Size
1116	CGP-P11C016-1AC	0.37	0.002	3988	4000	5/8" 9T
1121	CGP-P11C021-1AC	0.49	0.002	3988	4000	5/8" 9T
1126	CGP-P11C026-1AC	0.61	0.003	3988	3600	5/8" 9T
1129	CGP-P11C029-1AC	0.67	0.003	3988	3600	5/8" 9T
1137	CGP-P11C037-1AC	0.85	0.004	3988	3300	5/8" 9T
1449	CGP-P31C054-1AE	1.24	0.005	3500	3000	5/8" 9T
1462	CGP-P31C061-1AE	1.40	0.006	3500	3000	5/8" 9T
P37	CGP-P11C037-5AC	0.85	0.004	3988	3300	3/4" 11T
P42	CGP-P11C042-5AC	0.98	0.004	3988	3000	3/4" 11T
P71	CGP-P11C071-5AC	1.65	0.007	2900	2400	3/4" 11T
P82	CGP-P11C082-5AC	1.89	0.008	2465	2300	3/4" 11T

272 Pumps (Ordered Separately)
Pumps offered in the PGM20 with Bi-directional rotation-SAE "B" Shaft / SAE "B" Flange

Chelsea Pump Model	Displacement in³/rev	Displacement Gal/rev	Cont. Pressure PSI	Max Speed RPM	Shaft Size
3089210081	1.97	0.009	3000	2400	7/8" 13T
3089210091	2.46	0.011	3000	2400	7/8" 13T
3089210082	2.96	0.013	3000	2400	7/8" 13T
3089210083	3.45	0.015	2500	2400	7/8" 13T
3089210084	3.94	0.017	2500	2400	7/8" 13T
3089210089	3.94	0.017	2500	2400	7/8" 13T

Parker Hannifin Corporation
Chelsea Products Division
Olive Branch, MS 38654 USA

G56 (Dodge/RAM Cab Chassis w/Manual)

LEFT SIDE ONLY

TRANSMISSION GEAR DATA:
L.S. 06-BOLT Opening Gear REAR of Centerline
52 Teeth - R.H. HELIX

PITCH LINE TO APERTURE FACE:
1.3760" (35.0000MM)

Caution: Application Approval Required for PTO Output Shaft Speeds Above 2500 RPM

LEFT Side PTO Model	Inter. Torq.	Dir. Rot.	Engine % Fwd.	Engine % Rev.	Filler Block	Adapter Assy.	Stud Kit		Inter. Torq.	Dir. Rot.	Engine % Fwd.	Engine % Rev.	Filler Block	Adapter Assy.	Stud Kit
ONE SPEED - TWO GEAR - MECHANICAL SHIFT															
442LLKHX-*6 (1)	250	Opp	67				7170-72X								
442LQKHX-*6 (1)	225	Opp	72				7170-72X								
442LRKHX-*6 (1)	225	Opp	84				7170-72X								
442LSKHX-*6 (1)	200	Opp	100				7170-72X								
442LUKHX-*6 (1)	195	Opp	119				7170-72X								
442LWKHX-*6 (1)	175	Opp	140				7170-72X								
442LXKHX-*6 (1)	140	Opp	165				7170-72X								

PGP511 Pumps w/ Counter Clockwise Rotation - SAE "A" Shaft / SAE "A" Flange PTO Shaft (REARWARD)

PTO to order with this pump Option 442L*KHX-W6RC

Chelsea Pump Model	Displacement in³/rev	Displacement Gal/rev	Max Pressure PSI	Max Speed RPM
CGP-P11A016-1AC	0.37	0.0016	3988	4000
CGP-P11A026-1AC	0.60	0.0026	3988	3600
CGP-P11A029-1AC	0.67	0.0029	3988	3600
CGP-P11A037-1AC	0.85	0.0037	3988	3300

PGP511 Pumps w/ Clockwise Rotation - SAE "A" Shaft / SAE "A" Flange PTO Shaft (FORWARD)

PTO to order with this pump Option 442L*KHX-W3RC

Chelsea Pump Model	Displacement in³/rev	Displacement Gal/rev	Max Pressure PSI	Max Speed RPM
CGP-P11C016-1AC	0.37	0.0016	3988	4000
CGP-P11C026-1AC	0.60	0.0026	3988	3600
CGP-P11C029-1AC	0.67	0.0029	3988	3600
CGP-P11C037-1AC	0.85	0.0037	3988	3300

PGP517 Pumps w/ Clockwise Rotation - SAE "B" Shaft / SAE "A" Flange PTO Shaft (FORWARD)

PTO to order with this pump Option 442L*KHX-W3RD

Chelsea Pump Model	Displacement in³/rev	Displacement Gal/rev	Cont. Pressure PSI	Max Speed RPM
CGP-P17C050-2AN	1.16	0.0050	3625	3300
CGP-P17C066-2AN	1.52	0.0066	3625	3100
CGP-P17C087-2AN	2.01	0.0087	3625	3100
CGP-P17C100-2AN	2.31	0.0100	3625	3000
CGP-P17C137-2AN	3.16	0.0137	2900	2600

CAUTION: For Dodge Model Years 2007-2010 Chelsea Wiring Harness 329460X and for RAM Model Years 2011 and Later Chelsea Wiring Harness 329749X Must be Used to Complete the Installation (Order Separately). This will Allow the ODB II Monitoring System to be Disabled While the PTO System is being Operated.

NOTE: PTOs will not fit on 4 x 4 Dodge/Sterling 3500/4500/5500 Series Vehicles.

NOTE: PTOs are shown in the Standard Arrangements with the PTO Housing "Bulge" Down and the Output Shaft to the Rear of the Vehicle. Other Arrangements may be needed to Install PTO/Pump Applications due to the Transmission Cross Member Support Interfering with Pump Installations to the Rear of the Vehicle.

(1) Input Gear Part No. 5-P-1343

Parker Hannifin Corporation
Chelsea Products Division
Olive Branch, MS 38654 USA

AS66RC (MY2014 & Later) Gas
AS69RC (MY2013 and Later) Diesel

RIGHT SIDE ONLY

TRANSMISSION GEAR DATA:
R.S. 06-BOLT Opening Gear FORWARD of Centerline
69 Teeth - SPUR

PITCH LINE TO APERTURE FACE:
1.1200" (28.4480MM)

Caution: Application Approval Required for PTO Output Shaft Speeds Above 2500 RPM

	Inter. Torq.	Dir. Rot.	Engine % Fwd.	Engine % Rev.	Filler Block	Adapter Assy.	Stud Kit	RIGHT Side PTO Model	Inter. Torq.	Dir. Rot.	Engine % Fwd.	Engine % Rev.	Filler Block	Adapter Assy.	Stud Kit
ONE SPEED - TWO GEAR POWERSHIFT (AIR OR HYDRAULIC)															
								272RAKUP-*3	300	Eng	69				Furnished
								272RBKUP-*3	296	Eng	84				Furnished
								272RCKUP-*3	245	Eng	102				Furnished
								272RGKUP-*3	173	Eng	145				Furnished
								272RKKUP-*3	154	Eng	162				Furnished
								272RMKUP-*3	138	Eng	181				Furnished
ONE SPEED - TWO GEAR - POWERSHIFT (HYDRAULIC)															
								252RDKUX-*5 (6)	85	Eng	99				Furnished
								252RMKUX-*5 (7)	50	Eng	144				Furnished
								270RAKUP-*3 (1)	300	Eng	65				Furnished
								270RBKUP-*3 (2)	295	Eng	85				Furnished
								270RDKUP-*3 (3)	255	Eng	98				Furnished
								270RKKUP-*3 (4)	189	Eng	132				Furnished
								270RQKUP-*3 (5)	142	Eng	176				Furnished

See next page for more pump options.

Continued Next Page

CAUTION: For MY2013 and Later Trucks, the 252R uses Wiring Harness (329663X) and the 270R & 272R uses (329664X). This will Allow the ODB II Monitoring System to be Disabled while the PTO System is being Operated. This will Prevent "False" Lighting of the "Check Engine" Lamp due to the Engine-PTO Driven Accessories

NOTE: The PTO Output shaft torque ratings are based on the maximum allowabale torque at the 69 tooth transmission gear of 250 lbs-ft.

NOTE: To install one of the listed PTOs on the RIGHT SIDE, the truck exhaust pipe and transmission support must be dropped. Or installed through the passenger side floor "cut out". An OEM installed passenger side floor pan modification "Bulge" cut out must be installed. Order Mopar #82211579 "Patch Panel" Installation Kit if not Installed. Refer to Dodge Body Builders web site for complete details under "Chassis cab PTO Operation & Installation Guide-PTO Installation Alternative".

NOTE: For MY2013 and later RAM Cab Chassis Trucks, the torque converter locks up at an ENGINE Speed of 1200 RPM and stays on for PTO function to a maximum ENGINE Speed of 2000 RPM. The torque converter will unlock at an ENGINE Speed below 1000 RPM. The default PTO operation ENGINE speed is 900 RPM. Refer to Dodge Body Builders web site for details on raising the ENGINE speeds for PTO operation.

NOTE: When ordering one of the listed PTOs; Hose Kit, Wire Harness Kit and Metric Stud Kit are furnished with the PTO. The hose, wire harness and metric stud kits are required for completing the PTO installation.

NOTE: 272 Series stated torque values on this page are for Intermittent and Continuous Duty Applications.

(1) Input Gear Part No. 5-P-1353
(2) Input Gear Part No. 5-P-1354
(3) Input Gear Part No. 5-P-1355
(4) Input Gear Part No. 5-P-1356
(5) Input Gear Part No. 5-P-1359
(6) Input Gear Part No. 5-P-1427
(7) Input Gear Part No. 5-P-1437

Parker Hannifin Corporation
Chelsea Products Division
Olive Branch, MS 38654 USA

AS66RC (MY2014 & Later) Gas
AS69RC (MY2013 and Later) Diesel

RIGHT SIDE ONLY

TRANSMISSION GEAR DATA:
R.S. 06-BOLT Opening Gear FORWARD of Centerline
69 Teeth - SPUR

PITCH LINE TO APERTURE FACE:
1.1200" (28.4480MM)

Caution: Application Approval Required for PTO Output Shaft Speeds Above 2500 RPM

	Inter. Torq.	Dir. Rot.	Engine %		Filler Block	Adapter Assy.	Stud Kit	RIGHT Side PTO Model	Inter. Torq.	Dir. Rot.	Engine %		Filler Block	Adapter Assy.	Stud Kit
			Fwd.	Rev.							Fwd.	Rev.			

Pump Option Charts

252 Pumps Pumps offered in the PGP511 with 5/8" - 9T or 3/4" - 11T Shaft / SAE "A" Flange

Option Order Code	Chelsea Pump Model	Displacement in^3/rev	Displacement Gal/rev	Max Pressure PSI	Max Speed RPM	Shaft Size
1116	CGP-P11C016-1AC	0.37	0.002	3988	4000	5/8" 9T
1121	CGP-P11C021-1AC	0.49	0.002	3988	4000	5/8" 9T
1126	CGP-P11C026-1AC	0.61	0.003	3988	3600	5/8" 9T
1129	CGP-P11C029-1AC	0.67	0.003	3988	3600	5/8" 9T
1137	CGP-P11C037-1AC	0.85	0.004	3988	3300	5/8" 9T
1449	CGP-P31C054-1AE	1.24	0.005	3500	3000	5/8" 9T
1462	CGP-P31C061-1AE	1.40	0.006	3500	3000	5/8" 9T
P37	CGP-P11C037-5AC	0.85	0.004	3988	3300	3/4" 11T
P42	CGP-P11C042-5AC	0.98	0.004	3988	3000	3/4" 11T
P71	CGP-P11C071-5AC	1.65	0.007	2900	2400	3/4" 11T
P82	CGP-P11C082-5AC	1.89	0.008	2465	2300	3/4" 11T

272 Pumps (Pumps Ordered Separately)
Pumps offered in the PGM20 with Bi-directional rotation-SAE "B" Shaft / SAE "B" Flange

Chelsea Pump Model	Displacement in^3/rev	Displacement Gal/rev	Cont. Pressure PSI	Max Speed RPM	Shaft Size
3089210081	1.97	0.009	3000	2400	7/8" 13T
3089210091	2.46	0.011	3000	2400	7/8" 13T
3089210082	2.96	0.013	3000	2400	7/8" 13T
3089210083	3.45	0.015	2500	2400	7/8" 13T
3089210084	3.94	0.017	2500	2400	7/8" 13T
3089210089	3.94	0.017	2500	2400	7/8" 13T

Parker Hannifin Corporation
Chelsea Products Division
Olive Branch, MS 38654 USA

EATON FULLER

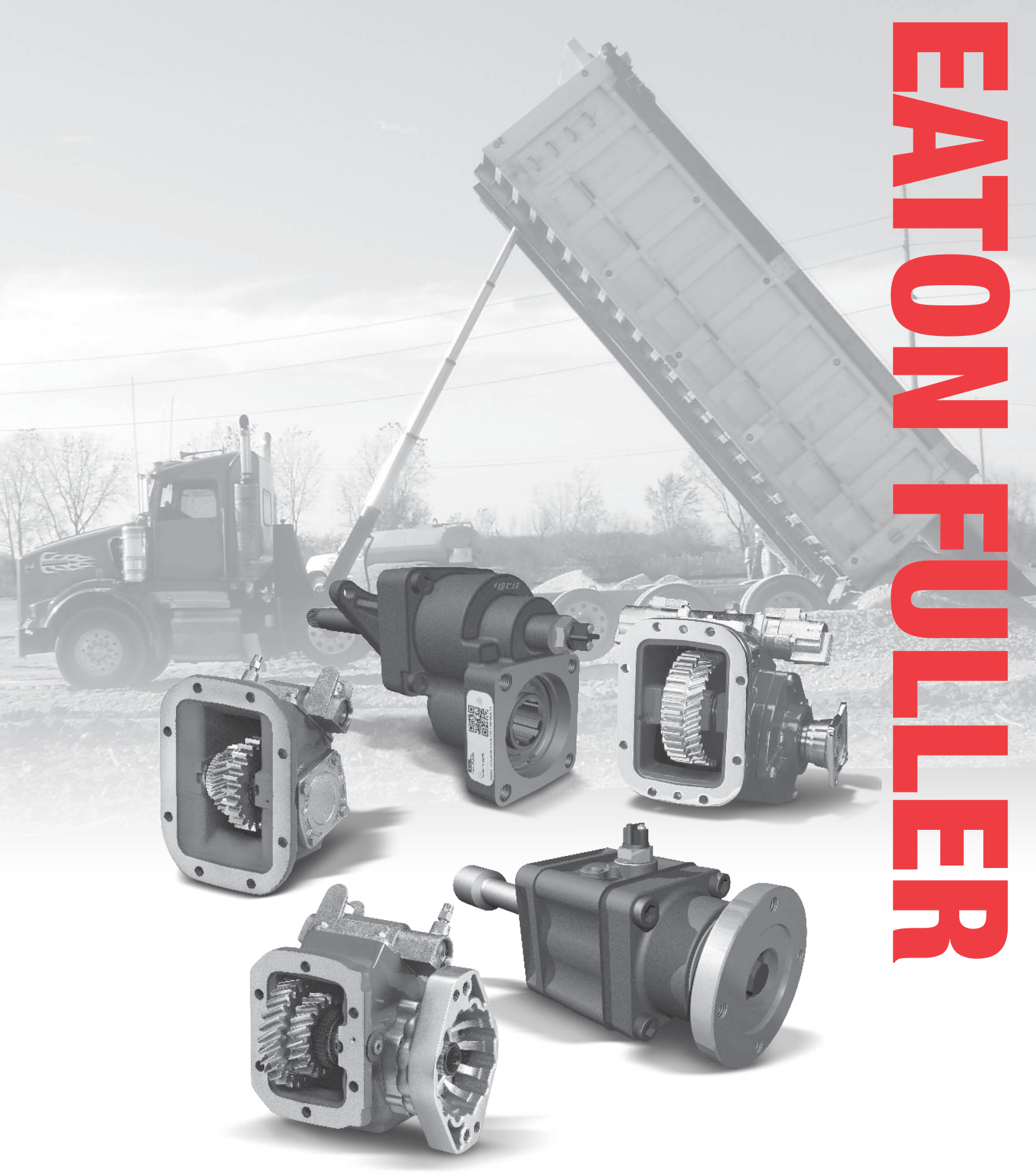

Parker | Chelsea

ENGINEERING YOUR SUCCESS.

Eaton Fuller

⚠ WARNING — User Responsibility

FAILURE OR IMPROPER SELECTION OR IMPROPER USE OF THE PRODUCTS DESCRIBED HEREIN OR RELATED ITEMS CAN CAUSE DEATH, PERSONAL INJURY AND PROPERTY DAMAGE.

This document and other information from Parker-Hannifin Corporation, its subsidiaries and authorized distributors provide product or system options for further investigation by users having technical expertise.

The user, through its own analysis and testing, is solely responsible for making the final selection of the system and components and assuring that all performance, endurance, maintenance, safety and warning requirements of the application are met. The user must analyze all aspects of the application, follow applicable industry standards, and follow the information concerning the product in the current product catalog and in any other materials provided from Parker or its subsidiaries or authorized distributors.

To the extent that Parker or its subsidiaries or authorized distributors provide component or system options based upon data or specifications provided by the user, the user is responsible for determining that such data and specifications are suitable and sufficient for all applications and reasonably foreseeable uses of the components or systems.

Offer of Sale

The items described in this document are hereby offered for sale by Parker Hannifin Corporation, its subsidiaries or its authorized distributors. This offer and its acceptance are governed by the provisions stated in the "Offer of Sale"..

© Copyright 2016, Parker Hannifin Corporation, All Rights Reserved

Parker Hannifin Corporation
Chelsea Products Division
Olive Branch, MS 38654 USA

Transmission/Chelsea Power Take-Offs Torque Capacities

Eaton Transmissions has recently reviewed the maximum allowable torque ratings on the heavy duty transmissions PTO driver gear. These limits are the maximum allowable torque ratings that are not to be exceeded under any operating conditions. The following Eaton transmissions are affected by this new torque limit, all FA/FO, FR/FRO and all RT/RTO/RTLO.

1. FA/FO, FR/FRO Transmissions have the HD main shaft bearing factory installed. The maximum torque ratings for the transmission PTO gear is 750 ft-lbs intermittent and 500 ft-lbs continuous.

2. RT/RTO/RTLO Transmissions can come with a Standard (350 ft-lbs) Main Shaft Bearing or a Heavy Duty (750 ft-lbs) Main Shaft Bearing. The Standard Bearing is capable of 350 ft-lbs Intermittent or Continuous Duty. The Heavy Duty Bearing is rated for 750 ft-lbs Intermittent or 500 ft-lbs Continuous Duty.

NOTE: It is the responsibility of the installer to verify which main shaft bearing is installed in the transmission.

FR/FRO Application Pages		
FLR-88	FLR-90	FLR-91

FA/FO Application Pages				
FLR-105	FLR-106	FLR-107	FLR-111	FLR-112

RT/RTO/RTLO Application Pages								
FLR-34	FLR-37	FLR-43	FLR-46	FLR-49	FLR-59	FLR-80	FLR-85	FLR-99
FLR-35	FLR-38	FLR-44	FLR-47	FLR-57	FLR-61	FLR-81	FLR-87	
FLR-36	FLR-39	FLR-45	FLR-48	FLR-58	FLR-64	FLR-82	FLR-98	

Using the Torque Limit Charts

- The torque charts on the following pages will help you determine the correct torque limits for your application. Listed are the standard Chelsea torque values for each series/speed ratio and the new values under the Eaton guidelines for the FA/FO, FR/FRO and RT/RTO/RTLO HD transmissions.

- If you have a RT/RTO/RTLO transmission with the roller type heavy duty input bearing (Eaton part number 4301417) the charts on the following pages will provide you with the torque values for each PTO Series/speed ratio.

- Continuous torque ratings are also listed for series and PTO speed ratios. In some cases these values will be the same as the intermittent value, which is because the new continuous rating is still below the Chelsea standard continuous rating for the PTO and does not exceed the transmission drive gear rating.

- “Refer to the Input Shaft Bearing Matrix on page 5.6.4 to determine which type of bearing is available in each series or model of transmission. For any series not listed in the chart, contact your local OE Chassis manufacturer or EATON Fuller representative.”

EATON FULLER Transmission Gear Load Chart

				RIGHT Side – 6-Bolt					BOTTOM – 8-Bolt			
				45 Teeth Driver Gear					47 Teeth Driver Gear			
				Standard Bearing		HD Bearing			Standard Bearing		HD Bearing	
		PTO RATING		Transmission Application Rating								
PTO Series	Ratio	Intermittent	Continuous	Int	Cont	Int	Cont	Ratio	Int	Cont	Int	Cont
272	A	300	300	300	300	300	300	A	N/A	N/A	N/A	N/A
272/282	B	300	300	300	300	300	300	B	300	300	300	300
	C	300	300	300	300	300	300	C	300	300	300	300
	D	300	300	300	300	300	300	D	293	293	300	300
	G	300	300	257	257	300	300	G	246	246	300	300
	K	300	300	230	230	300	300	K	220	220	300	300
	M	300	300	206	206	300	294	M	197	197	300	281
	P	300	300	184	184	300	263	P	176	176	300	252
	S	300	300	165	165	300	235	S	158	158	300	225
282	T	300	300	N/A	N/A	N/A	N/A	T	141	141	300	201
442/489	A	250	175	250	175	250	175	A	250	175	250	175
	B	250	175	250	175	250	175	B	250	175	250	175
	C	250	175	250	175	250	175	C	250	175	250	175
	F	250	175	250	175	250	175	F	250	175	250	175
	H	250	175	250	175	250	175	H	249	175	250	175
	L	250	175	233	175	250	175	L	223	175	250	175
	Q	225	158	216	158	225	158	Q	207	158	225	158
	R	225	158	187	158	225	158	R	179	158	225	158
	S	200	140	157	140	200	140	S	150	140	200	140
	U	195	137	132	132	195	137	U	126	126	195	137
	W	175	123	112	112	175	123	W	107	107	175	123
	X	140	98	95	95	140	98	X	91	91	140	98
660/680	F	375	263	301	263	375	263	F	289	263	375	263
	H	375	263	260	260	375	263	H	249	249	375	263
	Q	375	263	216	216	375	263	Q	207	207	375	263
	R	350	245	187	187	350	245	R	179	179	350	245
	S	350	245	157	157	336	224	S	150	150	322	215

NOTES:

1. STANDARD BEARING (STD) = 350 ft-lbs CONTINUOUS DUTY
2. HEAVY DUTY BEARING (HD) = 750 ft-lbs INTERMITTENT, 500 ft-lbs CONTINUOUS DUTY
3. RT/RTL/RTO/RTLO Transmissions can come from the factory with either the standard or HD bearing. See chart on page 5.6.4 for guidance.
4. All FR/FRO and FA/FO Transmissions have the HD Bearing factory installed and the HD Bearing chart should be used for these applications.

Gray area denotes the **Transmission Application Rating** is LOWER than the **PTO Rating** alone.

Parker Hannifin Corporation
Chelsea Products Division
Olive Branch, MS 38654 USA

EATON FULLER Transmission Gear Load Chart

				RIGHT Side – 6-Bolt					BOTTOM – 8-Bolt			
				45 Teeth Driver Gear					47 Teeth Driver Gear			
				Standard Bearing		HD Bearing			Standard Bearing		HD Bearing	
		PTO RATING		Transmission Application Rating								
PTO Series	Ratio	Intermittent	Continuous	Int	Cont	Int	Cont	Ratio	Int	Cont	Int	Cont
880	B	500	350	N/A		N/A		B	424	350	500	350
	D	500	350					D	357	350	500	350
	G	500	350					G	329	329	500	350
	J	500	350					J	280	280	500	350
	M	500	350					M	238	238	500	340
	Q	450	315					Q	203	203	435	290
	R	400	280					R	173	173	370	247
	T	350	245					T	134	134	287	191
823	B	750	500	N/A		N/A		B	424	424	750	500
	D	750	500					D	357	357	750	500
	G	750	500					G	329	329	705	470
	J	750	500					J	280	280	599	400
	M	650	450					M	238	238	511	340
	R	550	400					R	173	173	370	247
	T	500	350					T	142	142	305	203
885	B	500	350	N/A		N/A		B	424	350	500	350
	G	500	350					G	329	329	500	350
	J	500	350					J	280	280	500	350
	M	500	350					M	238	238	500	340

NOTES:

1. STANDARD BEARING (STD) = 350 ft-lbs CONTINUOUS DUTY
2. HEAVY DUTY BEARING (HD) = 750 ft-lbs INTERMITTENT, 500 ft-lbs CONTINUOUS DUTY
3. RT/RTL/RTO/RTLO Transmissions can come from the factory with either the standard or HD bearing. See chart on page 5.6.4 for guidance.
4. All FR/FRO and FA/FO Transmissions have the HD Bearing factory installed and the HD Bearing chart should be used for these applications.

Gray area denotes the **Transmission Application Rating** is LOWER than the **PTO Rating** alone.

Parker Hannifin Corporation
Chelsea Products Division
Olive Branch, MS 38654 USA

Input Shaft Bearing Matrix for Fuller

FOR REFERENCE ONLY

Transmission Model	INPUT SHAFT BEARING	
	Standard Duty 81504	Heavy Duty 4301417
F-14E316B-LSE, 15E316B-LSE, 17E316B-LSE	N/A	✓
FM-1XD310B-LST	✓	OPTION
FM-14E310B-LAS, FM-15E310B-LAS, 15E316B-LSE	N/A	✓
FO-14E310C-LAS, 16E310C-LAS	N/A	✓
FO(M)-16D313E-LEP	✓	OPTION
FOM-15E310C-LAS, 16E310C-LAS	N/A	✓
FR/FRO-xx210B/C	N/A	✓
RT-6609A	4301863	N/A
RT-8608L	✓	OPTION
RT-8709B	N/A	✓
RTX-xx609B	✓	OPTION
RT-xx709H	✓	OPTION
RTOC-16909A (T2)	✓	OPTION
RTOC-18909A (T2)	N/A	✓
RT/O-xx908LL	N/A	✓
RTO-xx909ALL	N/A	✓
RTLO-xx913A	✓	OPTION
RT/O-xx915	N/A	✓
RTLO-xx918B (except 22918B)	✓	OPTION
RTLO-22918B	N/A	✓
RTO-xx910B/C-AS/DM	✓	OPTION
RTLO(M)-16913L-DM	✓	OPTION
RTLO-xx918A-AS2 (except 22918A-AS)	✓	OPTION
RTLO-22918A-AS	N/A	✓
T/TX-14607A/B	✓	OPTION

HD Bearing Part Number - 4301417

NOTE: Eaton recommends the use of a heavy duty input shaft bearing for transmissions that will be equipped with a transmission mounted 6 or 8-Bolt PTO.

Maximum total* PTO output cannot exceed :

750 ft-lbs intermittent load when using the heavy duty bearing - 500 ft-lbs continuous

350 ft-lbs when using the standard duty bearing

*Total = the sum of all PTOs that can be used at the same time.

Parker Hannifin Corporation
Chelsea Products Division
Olive Branch, MS 38654 USA

NOTES



Eaton Fuller

Parker Hannifin Corporation
Chelsea Products Division
Olive Branch, MS 38654 USA

EATON FULLER TRANSMISSION INDEX

Transmission Make and Model	PTO Appl. Number	Number Forward Speeds	Teeth in PTO Driver
AT-1202	FLR-60	2	T30-B30
EH-6E706B-CD (Hybrid Electric System)	FLR-92Hy	6	L48
EH-6E706B-P (Hybrid Electric System)	FLR-92Hy	6	L48
EH-8E306A-CD (Hybrid Electric System)	FLR-92Hy	6	L48
EH-8E306A-UP (Hybrid Electric System)	FLR-92Hy	6	L48
EH-8E306A-UPG (Hybrid Electric System)	FLR-92Hy	6	L48
EH-8E406A-CD (Hybrid Electric System)	FLR-92Hy	6	L48
EH-8E406A-CDR (Hybrid Electric System)	FLR-92Hy	6	L48
EH-8E406A-P (Hybrid Electric System)	FLR-92Hy	6	L48
EH-8E406A-T (Hybrid Electric System)	FLR-92Hy	6	L48
EH-8E406A-UP (Hybrid Electric System)	FLR-92Hy	6	L48
EH-8E406A-UPG (Hybrid Electric System)	FLR-92Hy	6	L48
ES-11109 (Left Side Forward Opening)	FLR-84LF	9	LF32-CS
ET-16109 (Eaton China) Thrushaft use BJ mounting	FLR-101	9	CS-R58-B58
ET-16110 (Eaton China) Thrushaft use LG mounting	FLR-101	10	CS-R58-B58
ET-18109 (Eaton China) Thrushaft use BJ mounting	FLR-101	9	CS-R58-B58
ET-18110 (Eaton China) Thrushaft use LG mounting	FLR-101	10	CS-R58-B58
ET-20109 (Eaton China) Thrushaft use BJ mounting	FLR-101	9	CS-R58-B58
ET-20110 (Eaton China) Thrushaft use LG mounting	FLR-101	10	CS-R58-B58
ETS-16409 (Eaton India) Thrushaft use BJ mounting	FLR-101	9	CS-R58-B58
ETS-16410 (Eaton India) Thrushaft use LG mounting	FLR-101	10	CS-R58-B58
ETS-18409 (Eaton India) Thrushaft use BJ mounting	FLR-101	9	CS-R58-B58
ETS-18410 (Eaton India) Thrushaft use LG mounting	FLR-101	10	CS-R58-B58
ETS-20409 (Eaton India) Thrushaft use BJ mounting	FLR-101	9	CS-R58-B58
ETS-20410 (Eaton India) Thrushaft use LG mounting	FLR-101	10	CS-R58-B58
F-14E16B-LSE (UltraShift Plus)	FLR-107	16	CS-R45-B47
F-15E16B-LSE (UltraShift Plus)	FLR-107	16	CS-R45-B47
F-17E16B-LSE (UltraShift Plus)	FLR-107	16	CS-R45-B47
F-5405B-DM3 (UltraShift HV)	FLR-92	5	L48-R48
F-5405-DM3	FLR-97	5	L39-R39
F-6405B-DM3 (UltraShift HV)	FLR-92	5	L48-R48
F-6406N-ASW	FLR-97	6	L39-R39
F-6406N-ASX	FLR-97	6	L39-R39
F-6406N-AW3	FLR-97	6	L39-R39
F-8406N-ASW	FLR-97	6	L39-R39
FA-11810B (Advantage Series)	FLR-105	10	CS-R45-B47

Eaton Fuller

IMPORTANT: See Safety Information in Section 1 of the Chelsea Applications catalog HY25-3000/US.

Transmission PTO Driver & Apertures (Viewed from Rear of Transmission)

L-Left Side R-Right Side B-Bottom Side T-Top Side CS-Countershaft

For transmissions not listed, contact your authorized Chelsea Distributor.

Parker Hannifin Corporation
Chelsea Products Division
Olive Branch, MS 38654 USA

Transmission Make and Model	PTO Appl. Number	Number Forward Speeds	Teeth in PTO Driver
FA-12810B (Advantage Series)	FLR-105	10	CS-R45-B47
FA-13810B (Advantage Series)	FLR-105	10	CS-R45-B47
FA-14810B (Advantage Series)	FLR-105	10	CS-R45-B47
FA-15810B (Advantage Series)	FLR-105	10	CS-R45-B47
FA-9810B (Advantage Series)	FLR-105	10	CS-R45-B47
FAF-11810B (Advantage Series)	FLR-105	10	CS-R45-B47
FAF-12810B (Advantage Series)	FLR-105	10	CS-R45-B47
FAF-13810B (Advantage Series)	FLR-105	10	CS-R45-B47
FAF-14810B (Advantage Series)	FLR-105	10	CS-R45-B47
FAF-15810B (Advantage Series)	FLR-105	10	CS-R45-B47
FAF-9810B (Advantage Series)	FLR-105	10	CS-R45-B47
FAM-14810B (Advantage Series)	FLR-105	10	CS-R45-B47
FAM-15810B (Advantage Series)	FLR-105	10	CS-R45-B47
FAMF-14810B (Advantage Series)	FLR-105	10	CS-R45-B47
FAMF-15810B (Advantage Series)	FLR-105	10	CS-R45-B47
FAO-11810C (Advantage Series)	FLR-112	10	CS-R45-B47
FAO-12810C (Advantage Series)	FLR-112	10	CS-R45-B47
FAO-13810C (Advantage Series)	FLR-112	10	CS-R45-B47
FAO-14810C (Advantage Series)	FLR-112	10	CS-R45-B47
FAO-15810C (Advantage Series)	FLR-112	10	CS-R45-B47
FAO-16810C (Advantage Series)	FLR-112	10	CS-R45-B47
FAO-16810S-EN3 (Advanatge Series Automated)	FLR-112	10	CS-R45-B47
FAO-16810S-EP3 (Advantage Series Automated)	FLR-112	10	CS-R45-B47
FAOF-11810C (Advantage Series)	FLR-112	10	CS-R45-B47
FAOF-12810C (Advantage Series)	FLR-112	10	CS-R45-B47
FAOF-13810C (Advantage Series)	FLR-112	10	CS-R45-B47
FAOF-14810C (Advantage Series)	FLR-112	10	CS-R45-B47
FAOF-15810C (Advantage Series)	FLR-112	10	CS-R45-B47
FAOF-16810C (Advantage Series)	FLR-112	10	CS-R45-B47
FAOM-14810C (Advantage Series)	FLR-112	10	CS-R45-B47
FAOM-14810S-EC3 (Advantage Series Automated)	FLR-112	10	CS-R45-B47
FAOM-15810C (Advantage Series)	FLR-112	10	CS-R45-B47
FAOM-15810S-EC3 (Advantage Series Automated)	FLR-112	10	CS-R45-B47
FAOM-15810S-EN3 (Advantage Series Automated)	FLR-112	10	CS-R45-B47
FAOM-15810S-EP3 (Advantage Series Automated)	FLR-112	10	CS-R45-B47
FAOM-16810C (Advantage Series)	FLR-112	10	CS-R45-B47

IMPORTANT: See Safety Information in Section I of the Chelsea Applications catalog HY25-3000/US.

Transmission PTO Driver & Apertures (Viewed from Rear of Transmission)

L-Left Side R-Right Side B-Bottom Side T-Top Side CS-Countershaft

For transmissions not listed, contact your authorized Chelsea Distributor.

Parker Hannifin Corporation
Chelsea Products Division
Olive Branch, MS 38654 USA

EATON FULLER TRANSMISSION INDEX

Transmission Make and Model	PTO Appl. Number	Number Forward Speeds	Teeth in PTO Driver
FAOMF-14810C (Advantage Series)	FLR-112	10	CS-R45-B47
FAOMF-15810C (Advantage Series)	FLR-112	10	CS-R45-B47
FAOMF-16810C (Advantage Series)	FLR-112	10	CS-R45-B47
FM-14E310B-LAS (UltraShift Plus) Thrushaft use AT mounting	FLR-111	10	CS-R45-B47
FM-15E16B-LSE (UltraShift Plus)	FLR-107	16	CS-R45-B47
FM-15E310B-LAS (UltraShift Plus) Thrushaft use AT mounting	FLR-111	10	CS-R45-B47
FO-10E308LL-VCS (UltraShift Plus) Thrushaft use BD mounting	FLR-106	8+2	CS-R45-B47
FO-10E309ALL-VMS (UltraShift Plus) Thrushaft use BD mounting	FLR-107	9+2	CS-R45-B47
FO-10E310C-VAS (UltraShift Plus)Thrushaft use AT mounting	FLR-107	10	CS-R45-B47
FO-11E308LL-VCS (UltraShift Plus) Thrushaft use BD mounting	FLR-106	8	CS-R45-B47
FO-11E309ALL-VMS (UltraShift Plus) Thrushaft use BD mounting	FLR-107	9+2	CS-R45-B47
FO-12E308LL-VCS (UltraShift Plus) Thrushaft use BD mounting	FLR-106	8+2	CS-R45-B47
FO-12E309ALL-VMS (UltraShift Plus) Thrushaft use BD mounting	FLR-107	9+2	CS-R45-B47
FO-12E310C-VAS (UltraShift Plus)Thrushaft use AT mounting	FLR-107	10	CS-R45-B47
FO-14E308LL-VCS (UltraShift Plus) Thrushaft use BD mounting	FLR-106	8+2	CS-R45-B47
FO-14E309ALL-VMS (UltraShift Plus)Thrushaft use BD mounting	FLR-107	9+2	CS-R45-B47
FO-14E310C-LAS (UltraShift Plus) Thrushaft use AT mounting	FLR-107	10	CS-R45-B47
FO-14E310C-VAS (UltraShift Plus)Thrushaft use AT mounting	FLR-107	10	CS-R45-B47
FO-14E313A-MHP (UltraShift Plus)	FLR-107	13	CS-R45-B47
FO-14E313A-VHP (UltraShift Plus)	FLR-107	13	CS-R45-B47
FO-14E318B-MXP (UltraShift Plus)	FLR-107	18	CS-R45-B47
FO-14E318B-VXP (UltraShift Plus)	FLR-107	18	CS-R45-B47
FO-16D313E-LEP (UltraShift)	FLR-113	13	R45-B47
FO-16E308LL-VCS (UltraShift Plus) Thrushaft use BD mounting	FLR-106	8+2	CS-R45-B47
FO-16E309ALL-VMS (UltraShift Plus)Thrushaft use BD mounting	FLR-107	9+2	CS-R45-B47
FO-16E310C-LAS (UltraShift Plus) Thrushaft use AT mounting	FLR-107	10	CS-R45-B47
FO-16E310C-VAS (UltraShift Plus) Thrushaft use AT mounting	FLR-107	10	CS-R45-B47
FO-16E313A-MHP (UltraShift Plus)	FLR-107	13	CS-R45-B47
FO-16E313A-VHP (UltraShift Plus)	FLR-107	13	CS-R45-B47
FO-16E318B-MXP (UltraShift Plus)	FLR-107	18	CS-R45-B47
FO-16E318B-VXP (UltraShift Plus)	FLR-107	18	CS-R45-B47
FO-17E308LL-VCS (UltraShift Plus) Thrushaft use BD Mounting	FLR-106	8+2	CS-R45-B47
FO-17E309ALL-VMS (UltraShift Plus) Thrushaft use BD mounting	FLR-107	9+2	CS-R45-B47
FO-18E310C-LAS (UltraShift Plus) Thrushaft use AT mounting	FLR-107	10	CS-R45-B47
FO-18E313A-MHP (UltraShift Plus)	FLR-107	13	CS-R45-B47
FO-18E313A-VHP (UltraShift Plus)	FLR-107	13	CS-R45-B47

Eaton Fuller

IMPORTANT: See Safety Information in Section I of the Chelsea Applications catalog HY25-3000/US.

Transmission PTO Driver & Apertures (Viewed from Rear of Transmission)

L-Left Side R-Right Side B-Bottom Side T-Top Side CS-Countershaft

For transmissions not listed, contact your authorized Chelsea Distributor.

Parker Hannifin Corporation
Chelsea Products Division
Olive Branch, MS 38654 USA

Transmission Make and Model	PTO Appl. Number	Number Forward Speeds	Teeth in PTO Driver
FO-18E318B-MXP (UltraShift Plus)	FLR-107	18	CS-R45-B47
FO-18E318B-VXP (UltraShift Plus)	FLR-107	18	CS-R45-B47
FO-20E313A-MHP (UltraShift Plus)	FLR-107	13	CS-R45-B47
FO-20E313A-VHP (UltraShift Plus)	FLR-107	13	CS-R45-B47
FO-20E318B-MXP (UltraShift Plus)	FLR-107	18	CS-R45-B47
FO-20E318B-VXP (UltraShift Plus)	FLR-107	18	CS-R45-B47
FO-22E318B-MXP (UltraShift Plus)	FLR-107	18	CS-R45-B47
FO-22E318B-VXP (UltraShift Plus)	FLR-107	18	CS-R45-B47
FO-5406B-DM3 (UltraShift HV)	FLR-92	6	L48-R48
FO-6406A-ASW	FLR-92	6	L48-R48
FO-6406A-ASX	FLR-92	6	L48-R48
FO-6406A-AW3	FLR-92	6	L48-R48
FO-6406B-DM3 (UltraShift HV)	FLR-92	6	L48-R48
FO-6406N-AW3	FLR-97	6	L39-R39
FO-8406A-ASW	FLR-92	6	L48-R48
FO-8406A-ASX	FLR-92	6	L48-R48
FO-8406A-AW3	FLR-92	6	L48-R48
FOM-14E310C-LAS (UltraShift Plus) Thrushaft use AT mounting	FLR-107	10	CS-R45-B47
FOM-14E310C-VAS (UltraShift Plus)Thrushaft use AT mounting	FLR-107	10	CS-R45-B47
FOM-15E310C-LAS (UltraShift Plus) Thrushaft use AT mounting	FLR-107	10	CS-R45-B47
FOM-15E310C-VAS (UltraShift Plus)Thrushaft use AT mounting	FLR-107	10	CS-R45-B47
FOM-16D313E-LEP	FLR-58	13	CS-R45-B47
FOM-16D313E-LEP (UltraShift)	FLR-113	13	R45-B47
FOM-16E310C-LAS (UltraShift Plus) Thrushaft use AT mounting	FLR-107	10	CS-R45-B47
FOM-16E310C-VAS (UltraShift Plus)Thrushaft use AT mounting	FLR-107	10	CS-R45-B47
FR-11210B	FLR-90	10	CS-R45-B47
FR-12210B	FLR-90	10	CS-R45-B47
FR-13210B	FLR-90	10	CS-R45-B47
FR-14210B	FLR-90	10	CS-R45-B47
FR-15210B	FLR-90	10	CS-R45-B47
FR-9210	FLR-90	10	CS-R45-B47
FR-9210B	FLR-90	10	CS-R45-B47
FRF-9210B	FLR-90	10	CS-R45-B47
FRLO-14410C	FLR-95	10	L51-R51
FRLO-14410C-T2	FLR-95	10	L51-R51
FRLO-15410C	FLR-95	10	L51-R51

IMPORTANT: See Safety Information in Section I of the Chelsea Applications catalog HY25-3000/US.

Transmission PTO Driver & Apertures (Viewed from Rear of Transmission)

L-Left Side R-Right Side B-Bottom Side T-Top Side CS-Countershaft

For transmissions not listed, contact your authorized Chelsea Distributor.

Parker Hannifin Corporation
Chelsea Products Division
Olive Branch, MS 38654 USA

EATON FULLER TRANSMISSION INDEX

Transmission Make and Model	PTO Appl. Number	Number Forward Speeds	Teeth in PTO Driver
FRLO-15410C-T2	FLR-95	10	L51-R51
FRLO-16410C	FLR-95	10	L51-R51
FRLO-16410C-T2	FLR-95	10	L51-R51
FRM-15210B (Thrushaft use BJ mounting)	FLR-90	10	CS-R45-B47
FRO-11210B	FLR-91	10	CS-R45-B47
FRO-11210C	FLR-88	10	CS-R45-B47
FRO-12210B	FLR-91	10	CS-R45-B47
FRO-12210C	FLR-88	10	CS-R45-B47
FRO-13210B	FLR-91	10	CS-R45-B47
FRO-13210C	FLR-88	10	CS-R45-B47
FRO-14210B	FLR-91	10	CS-R45-B47
FRO-14210C	FLR-88	10	CS-R45-B47
FRO-15210B	FLR-91	10	CS-R45-B47
FRO-15210C	FLR-88	10	CS-R45-B47
FRO-16210B	FLR-91	10	CS-R45-B47
FRO-16210C	FLR-88	10	CS-R45-B47
FRO-16210R	FLR-88	10	CS-R45-B47
FRO-17210C	FLR-88	10	CS-R45-B47
FRO-18210C	FLR-88	10	CS-R45-B47
FROF-15210C	FLR-88	10	CS-R45-B47
FRW-15210B	FLR-90	10	CS-R45-B47
FS-4205A	FLR-78	5	L28-R28
FS-4205B	FLR-79	5	L28-R28
FS-5306A	FLR-68	6	L38-CS-R38
FS-5406A	FLR-68	6	L38-CS-R38
FS-5406N	FLR-97	6	L39-R39
FS-6106A	FLR-67	6	L50-R50
FS-6109A (Left Side Forward Opening)	FLR-84LF	9	LF32-CS
FS-6205A	FLR-69	5	L39-R39
FS-6205B	FLR-70	5	L41-R41
FS-6206	FLR-68	6	L38-CS-R38
FS-6206A	FLR-68	6	L38-CS-R38
FS-6209A (Left Side Forward Opening)	FLR-84LF	9	LF32-CS
FS-6305A	FLR-69	5	L39-R39
FS-6305B	FLR-70	5	L41-R41
FS-6306	FLR-68	6	L38-CS-R38

Eaton Fuller

IMPORTANT: See Safety Information in Section 1 of the Chelsea Applications catalog HY25-3000/US.

Transmission PTO Driver & Apertures (Viewed from Rear of Transmission)

L-Left Side R-Right Side B-Bottom Side T-Top Side CS-Countershaft

For transmissions not listed, contact your authorized Chelsea Distributor.

Parker Hannifin Corporation
Chelsea Products Division
Olive Branch, MS 38654 USA

Transmission Make and Model	PTO Appl. Number	Number Forward Speeds	Teeth in PTO Driver
FS-6306A	FLR-68	6	L38-CS-R38
FS-6309A (Left Side Forward Opening)	FLR-84LF	9	LF32-CS
FS-6406	FLR-68	6	L38-CS-R38
FS-6406A	FLR-68	6	L38-CS-R38
FS-6406N	FLR-97	6	L39-R39
FS-7206A	FLR-67	6	L50-R50
FS-8206A	FLR-67	6	L50-R50
FS-8209A (ES11109)(Left Side Forward Opening)	FLR-84LF	9	LF32-CS
FS-8309 (Left Side Forward Opening)	FLR-84LF	9	LF32-CS
FS-8406A	FLR-67	6	L50-R50
FSB-5406B	FLR-94	6	L38-R38
FSB-6206A	FLR-94	6	L38-R38
FSB-6406B	FLR-94	6	L38-R38
FSO-5206 (A & B)	FLR-87	6	L47-CS
FSO-5406A	FLR-92	6	L48-R48
FSO-6109A (Left Forward)	FLR-96LF	9	LF43
FSO-6109A (Left Rear)	FLR-96LR	9	LR23
FSO-6406A (Eaton Brazil)	FLR-92	6	L48-R48
FSO-8209A (Left Rear)	FLR-96LR	9	LR23
FSO-8209A (Left Side Forward Opening)	FLR-96LF	9	LF43
FSO-8406A (Eaton Brazil)	FLR-92	6	L48-R48
FTS-16108LL (Eaton Europe/Brazil) Thrushaft use LG mounting	FLR-101	8+2	CS-R58-B58
FTS-16109A (Eaton Europe/Brazil) Thrushaft use BJ mounting	FLR-101	9	CS-R58-B58
FTS-18108LL (Eaton Europe/Brazil) Thrushaft use LG mounting	FLR-101	8+2	CS-R58-B58
FTS-18109A (Eaton Europe/Brazil) Thrushaft use BJ mounting	FLR-101	9	CS-R58-B58
FTS-20108LL (Eaton Europe/Brazil) Thrushaft use LG mounting	FLR-101	8+2	CS-R58-B58
FTS-20109A (Eaton Europe/Brazil) Thrushaft use BJ mounting	FLR-101	9	CS-R58-B58
RT-11609A (Thrushaft option use “AT” mounting)	FLR-34	8+1	CS-R45-B47
RT-11709H (Thrushaft option use “AU” mounting)	FLR-34	9	CS-R45-B47
RT-12609A (Thrushaft option use “AT” mounting)	FLR-34	9	CS-R45-B47
RT-12709A	FLR-34	9	CS-R45-B47
RT-12710B (Thrushaft option use “AU” mounting)	FLR-34	10	CS-R45-B47
RT-13609A (Thrushaft option use “AT” mounting)	FLR-34	9	CS-R45-B47
RT-13709H (Thrushaft option use “AU” mounting)	FLR-34	9	CS-R45-B47
RT-13710B (Thrushaft option use “AU” mounting)	FLR-34	10	CS-R45-B47
RT-14609A (Thrushaft option use “AU” mounting)	FLR-34	8+1	CS-R45-B47

IMPORTANT: See Safety Information in Section I of the Chelsea Applications catalog HY25-3000/US.

Transmission PTO Driver & Apertures (Viewed from Rear of Transmission)

L-Left Side R-Right Side B-Bottom Side T-Top Side CS-Countershaft

For transmissions not listed, contact your authorized Chelsea Distributor.

Parker Hannifin Corporation
Chelsea Products Division
Olive Branch, MS 38654 USA

EATON FULLER TRANSMISSION INDEX

Transmission Make and Model	PTO Appl. Number	Number Forward Speeds	Teeth in PTO Driver
RT-14709A	FLR-34	9	CS-R45-B47
RT-14710B (Thrushaft option use “AU” mounting)	FLR-34	10	CS-R45-B47
RT-14710B-AS2	FLR-34	10	CS-R45-B47
RT-14715 (Thrushaft option use “BD” mounting)	FLR-34	15	CS-R45-B47
RT-14910B-AS2	FLR-34	10	CS-R45-B47
RT-14915	FLR-34	15	CS-R45-B47
RT-15715	FLR-34	15	CS-R45-B47
RT-6609A	FLR-66	9	R33-B33
RT-6610	FLR-40	10	R33-B33
RT-6613	FLR-40	13	R33-B33
RT-7608LL	FLR-66	8+2	R33-B33
RT-8608L	FLR-64	8	R45-B47
RT-8609	FLR-66	9	R33-B33
RT-8709B	FLR-34	9	CS-R45-B47
RT-8908LL	FLR-34	8+2	CS-R45-B47
RT-9710B (Thrushaft option use “AU” mounting)	FLR-34	10	CS-R45-B47
RTA-14710B-AS	FLR-34	10	CS-R45-B47
RTAO-10710B-AC	FLR-57	10	CS-R45-B47
RTAO-10710B-AS	FLR-57	10	CS-R45-B47
RTAO-10710C-AC	FLR-58	10	CS-R45-B47
RTAO-10710C-AS	FLR-58	10	CS-R45-B47
RTAO-12710B-AC	FLR-57	10	CS-R45-B47
RTAO-12710B-AS	FLR-57	10	CS-R45-B47
RTAO-12710C-AC	FLR-58	10	CS-R45-B47
RTAO-12710C-AS	FLR-58	10	CS-R45-B47
RTAO-14710B-AC	FLR-57	10	CS-R45-B47
RTAO-14710B-AS	FLR-57	10	CS-R45-B47
RTAO-14710C-AC	FLR-58	10	CS-R45-B47
RTAO-14710C-AS	FLR-58	10	CS-R45-B47
RTAO-16710B-AC	FLR-57	10	CS-R45-B47
RTAO-16710B-AS	FLR-57	10	CS-R45-B47
RTAO-16710C-AS	FLR-58	10	CS-R45-B47
RTF-11609A	FLR-34	9	CS-R45-B47
RTF-12609A	FLR-34	9	CS-R45-B47
RTF-12709H	FLR-34	9	CS-R45-B47
RTF-12710B	FLR-34	10	CS-R45-B47

IMPORTANT: See Safety Information in Section 1 of the Chelsea Applications catalog HY25-3000/US.

Transmission PTO Driver & Apertures (Viewed from Rear of Transmission)

L-Left Side R-Right Side B-Bottom Side T-Top Side CS-Countershaft

For transmissions not listed, contact your authorized Chelsea Distributor.

Parker Hannifin Corporation
Chelsea Products Division
Olive Branch, MS 38654 USA

Transmission Make and Model	PTO Appl. Number	Number Forward Speeds	Teeth in PTO Driver
RTF-13609A	FLR-34	9	CS-R45-B47
RTF-13709H	FLR-34	9	CS-R45-B47
RTF-13710B	FLR-34	10	CS-R45-B47
RTF-14609A	FLR-34	9	CS-R45-B47
RTF-14709H	FLR-34	9	CS-R45-B47
RTF-14710B	FLR-34	10	CS-R45-B47
RTF-14715	FLR-34	15	CS-R45-B47
RTF-14915	FLR-34	15	CS-R45-B47
RTF-15715	FLR-34	15	CS-R45-B47
RTL-13710B	FLR-34	10	CS-R45-B47
RTL-14710B	FLR-34	10	CS-R45-B47
RTLC-16609E (Convertible 9 to 13 Speed)	FLR-58	9	CS-R45-B47
RTLO-11610B-T2	FLR-34	10	CS-R45-B47
RTLO-12610B	FLR-34	10	CS-R45-B47
RTLO-12610B-T2	FLR-34	10	CS-R45-B47
RTLO-12713A	FLR-58	13	CS-R45-B47
RTLO-13118-AMT	FLR-58	13	CS-R45-B47
RTLO-13610B	FLR-34	10	CS-R45-B47
RTLO-13610B-T2	FLR-34	10	CS-R45-B47
RTLO-14610A	FLR-34	10	CS-R45-B47
RTLO-14610B	FLR-34	10	CS-R45-B47
RTLO-14610B-T2	FLR-34	10	CS-R45-B47
RTLO-14613B	FLR-34	13	CS-R45-B47
RTLO-14713A	FLR-58	13	CS-R45-B47
RTLO-14713A-T2	FLR-58	13	CS-R45-B47
RTLO-14718B	FLR-58	18	CS-R45-B47
RTLO-14718B-T2	FLR-58	18	CS-R45-B47
RTLO-14918A-AS2	FLR-58	18	CS-R45-B47
RTLO-14918A-AS3	FLR-58	18	CS-R45-B47
RTLO-14918B	FLR-58	18	CS-R45-B47
RTLO-14918B-AS	FLR-58	18	CS-R45-B47
RTLO-15610B-T2	FLR-34	10	CS-R45-B47
RTLO-16610B	FLR-34	10	CS-R45-B47
RTLO-16610B-T2	FLR-34	10	CS-R45-B47
RTLO-16713A	FLR-58	13	CS-R45-B47
RTLO-16713A-T2	FLR-58	13	CS-R45-B47

IMPORTANT: See Safety Information in Section I of the Chelsea Applications catalog HY25-3000/US.

Transmission PTO Driver & Apertures (Viewed from Rear of Transmission)

L-Left Side R-Right Side B-Bottom Side T-Top Side CS-Countershaft

For transmissions not listed, contact your authorized Chelsea Distributor.

Eaton Fuller

Parker Hannifin Corporation
Chelsea Products Division
Olive Branch, MS 38654 USA

EATON FULLER TRANSMISSION INDEX

Transmission Make and Model	PTO Appl. Number	Number Forward Speeds	Teeth in PTO Driver
RTLO-16718B	FLR-58	18	CS-R45-B47
RTLO-16718B-T2	FLR-58	18	CS-R45-B47
RTLO-16913L-DM3 (UltraShift)	FLR-113	13	R45-B47
RTLO-16913L-LHP	FLR-58	13	CS-R45-B47
RTLO-16918A-AS2	FLR-58	18	CS-R45-B47
RTLO-16918A-AS3	FLR-58	18	CS-R45-B47
RTLO-16918B	FLR-58	18	CS-R45-B47
RTLO-16918B-AS	FLR-58	18	CS-R45-B47
RTLO-17610B	FLR-34	10	CS-R45-B47
RTLO-17610B-T2	FLR-34	10	CS-R45-B47
RTLO-18610B	FLR-34	10	CS-R45-B47
RTLO-18718B	FLR-58	18	CS-R45-B47
RTLO-18718B-T2	FLR-58	18	CS-R45-B47
RTLO-18913A	FLR-58	13	CS-R45-B47
RTLO-18913A-T2	FLR-58	13	CS-R45-B47
RTLO-18918A-AS2	FLR-58	18	CS-R45-B47
RTLO-18918B	FLR-58	18	CS-R45-B47
RTLO-18918B-AS	FLR-58	18	CS-R45-B47
RTLO-20913A	FLR-58	13	CS-R45-B47
RTLO-20918A-AS2	FLR-58	18	CS-R45-B47
RTLO-20918B	FLR-58	18	CS-R45-B47
RTLO-20918B-AS	FLR-58	18	CS-R45-B47
RTLO-22918A-AS2	FLR-58	18	CS-R45-B47
RTLO-22918A-AS3	FLR-58	18	CS-R45-B47
RTLOM-16913L-DM3 (UltraShift)	FLR-113	13	R45-B47
RTLOM-16913L-LHP	FLR-58	13	CS-R45-B47
RTO-10710B-AS2	FLR-57	10	CS-R45-B47
RTO-10910B-AS2	FLR-57	10	CS-R45-B47
RTO-10910B-AS3	FLR-57	10	CS-R45-B47
RTO-10910B-DM2 (UltraShift)	FLR-100	10	CS-R45-B47
RTO-10910B-DM3 (UltraShift)	FLR-100	10	CS-R45-B47
RTO-11709MLL	FLR-58	9+2	CS-R45-B47
RTO-11908LL	FLR-57	8+2	CS-R45-B47
RTO-11909ALL	FLR-58	11	CS-R45-B47
RTO-11909MLL	FLR-58	9	CS-R45-B47
RTO-12710B-AS2	FLR-57	10	CS-R45-B47

Eaton Fuller

IMPORTANT: See Safety Information in Section 1 of the Chelsea Applications catalog HY25-3000/US.

Transmission PTO Driver & Apertures (Viewed from Rear of Transmission)

L-Left Side R-Right Side B-Bottom Side T-Top Side CS-Countershaft

For transmissions not listed, contact your authorized Chelsea Distributor.

Parker Hannifin Corporation
Chelsea Products Division
Olive Branch, MS 38654 USA

Transmission Make and Model	PTO Appl. Number	Number Forward Speeds	Teeth in PTO Driver
RTO-12910B-AS2 (Thrushaft option use AT mounting)	FLR-57	10	CS-R45-B47
RTO-12910B-AS3 (Thrushaft option use AT mounting)	FLR-57	10	CS-R45-B47
RTO-12910B-DM2 (UltraShift)	FLR-100	10	CS-R45-B47
RTO-12910B-DM3 (UltraShift)	FLR-100	10	CS-R45-B47
RTO-14609B (Thrushaft option use “AU” mounting)	FLR-58	9	CS-R45-B47
RTO-14613	FLR-34	13	CS-R45-B47
RTO-14709MLL	FLR-58	9+2	CS-R45-B47
RTO-14710B-AS2	FLR-57	10	CS-R45-B47
RTO-14908LL	FLR-57	8+2	CS-R45-B47
RTO-14909ALL	FLR-58	11	CS-R45-B47
RTO-14910B-AS2	FLR-57	10	CS-R45-B47
RTO-14910B-AS3	FLR-57	10	CS-R45-B47
RTO-14910B-DM2 (UltraShift)	FLR-100	10	CS-R45-B47
RTO-14910B-DM3 (UltraShift)	FLR-100	10	CS-R45-B47
RTO-14910C-AS2	FLR-58	10	CS-R45-B47
RTO-14910C-AS3	FLR-58	10	CS-R45-B47
RTO-14915	FLR-59	15	CS-R45-B47
RTO-16710B	FLR-57	10	CS-R45-B47
RTO-16710B-AS2	FLR-57	10	CS-R45-B47
RTO-16710C-AS2	FLR-58	10	CS-R45-B47
RTO-16908LL (Thrushaft use BD mounting)	FLR-57	8+2	CS-R45-B47
RTO-16909ALL (Thrushaft use BD mounting)	FLR-58	11	CS-R45-B47
RTO-16910B-AS2	FLR-57	10	CS-R45-B47
RTO-16910B-AS3	FLR-57	10	CS-R45-B47
RTO-16910B-DM2 (UltraShift)	FLR-100	10	CS-R45-B47
RTO-16910B-DM3 (UltraShift)	FLR-100	10	CS-R45-B47
RTO-16910C-AS2	FLR-58	10	CS-R45-B47
RTO-16910C-AS3	FLR-58	10	CS-R45-B47
RTO-16915	FLR-59	15	CS-R45-B47
RTO-18910B-AS2	FLR-58	10	CS-R45-B47
RTO-18910B-AS3	FLR-58	10	CS-R45-B47
RTO-6610	FLR-41	10	R33-B33
RTO-6613	FLR-41	13	R33-B33
RTO-7613	FLR-40	13	R33-B33
RTO-909B	FLR-58	8+1	CS-R45-B47
RTO-9513	FLR-34	13	CS-R45-B47

IMPORTANT: See Safety Information in Section I of the Chelsea Applications catalog HY25-3000/US.

Transmission PTO Driver & Apertures (Viewed from Rear of Transmission)

L-Left Side R-Right Side B-Bottom Side T-Top Side CS-Countershaft

For transmissions not listed, contact your authorized Chelsea Distributor.

Parker Hannifin Corporation
Chelsea Products Division
Olive Branch, MS 38654 USA

EATON FULLER TRANSMISSION INDEX

Transmission Make and Model	PTO Appl. Number	Number Forward Speeds	Teeth in PTO Driver
RTOC-16909A (Convertible 9 to 13 Speed)	FLR-58	9	CS-R45-B47
RTOC-18909A	FLR-58	9	CS-R45-B47
RTOCM-16909A (Convertible 9 to 13 Speed)	FLR-58	13	CS-R45-B47
RTOM-16910B-DM3 (UltraShift)	FLR-100	10	CS-R45-B47
RTS-11909A (Thrushaft use BJ mounting)	FLR-101	9	CS-R58-B58
RTS-11912L (Thrushaft use LH mounting)	FLR-102	13	CS-R62-B62
RTX-11609B	FLR-58	9	CS-R45-B47
RTX-11609P	FLR-57	9	CS-R45-B47
RTX-11609R (Thrushaft option use “AT” mounting)	FLR-57	8+1	CS-R45-B47
RTX-12609B (Thrushaft option use “AT” mounting)	FLR-58	9	CS-R45-B47
RTX-12609P	FLR-57	9	CS-R45-B47
RTX-12609R	FLR-57	9	CS-R45-B47
RTX-12709H	FLR-58	9	CS-R45-B47
RTX-12710C (Thrushaft option use “AU” mounting)	FLR-58	10	CS-R45-B47
RTX-13609B	FLR-58	9	CS-R45-B47
RTX-13609B (Thrushaft option use “AT” mounting)	FLR-58	9	CS-R45-B47
RTX-13709H	FLR-58	9	CS-R45-B47
RTX-13710B	FLR-57	10	CS-R45-B47
RTX-13710C (Thrushaft option use “AU” mounting)	FLR-58	10	CS-R45-B47
RTX-14609B	FLR-58	9	CS-R45-B47
RTX-14609R (Thrushaft option use “AU” mounting)	FLR-57	8+1	CS-R45-B47
RTX-14708LL	FLR-57	8	CS-R45-B47
RTX-14709H	FLR-58	9	CS-R45-B47
RTX-14710B (Thrushaft option use “AU” mounting)	FLR-57	10	CS-R45-B47
RTX-14710C (Thrushaft option use “AU” mounting)	FLR-58	10	CS-R45-B47
RTX-14715	FLR-59	15	CS-R45-B47
RTX-15715	FLR-59	15	CS-R45-B47
RTX-16709B	FLR-58	9	CS-R45-B47
RTX-16709H	FLR-58	9	CS-R45-B47
RTX-16710B	FLR-57	10	CS-R45-B47
RTX-16710X	FLR-58	10	CS-R45-B47
T-14607A	FLR-75	7	L78-R78
T-14607B	FLR-75	7	L78-R78
TX-14607B	FLR-77	7	L78-R78

Eaton Fuller

IMPORTANT: See Safety Information in Section I of the Chelsea Applications catalog HY25-3000/US.

Transmission PTO Driver & Apertures (Viewed from Rear of Transmission)

L-Left Side R-Right Side B-Bottom Side T-Top Side CS-Countershaft

For transmissions not listed, contact your authorized Chelsea Distributor.

Parker Hannifin Corporation
Chelsea Products Division
Olive Branch, MS 38654 USA

RT-11609A (Thrushaft option use "AT" mounting)
RT-11709H (Thrushaft option use "AU" mounting)
RT-12609A (Thrushaft option use "AT" mounting)
RT-12709A
RT-12710B (Thrushaft option use "AU" mounting)
RT-13609A (Thrushaft option use "AT" mounting)
RT-13709H (Thrushaft option use "AU" mounting)
RT-13710B (Thrushaft option use "AU" mounting)
RT-14609A (Thrushaft option use "AU" mounting)
RT-14709A
RT-14710B (Thrushaft option use "AU" mounting)
RT-14710B-AS2
RT-14715 (Thrushaft option use "BD" mounting)
RT-14910B-AS2
RT-14915
RT-15715
RT-8709B
RT-8908LL
RT-9710B (Thrushaft option use "AU" mounting)
RTA-14710B-AS
RTF-11609A
RTF-12609A
RTF-12709H
RTF-12710B

BOTTOM SIDE ONLY

TRANSMISSION GEAR DATA:
BOT 08-BOLT Opening Gear FORWARD of Centerline
47 Teeth - SPUR

PITCH LINE TO APERTURE FACE:
0.8050" (20.4500MM)

RIGHT SIDE ONLY

TRANSMISSION GEAR DATA:
R.S. 06-BOLT Opening Gear FORWARD of Centerline
45 Teeth - SPUR

PITCH LINE TO APERTURE FACE:
1.0850" (27.5600MM)

Caution: Application Approval Required for PTO Output Shaft Speeds Above 2500 RPM

BOTTOM Side PTO Model	Inter. Torq.	Dir. Rot.	Engine % Fwd.	Engine % Rev.	Filler Block	Adapter Assy.	Stud Kit	RIGHT Side PTO Model	Inter. Torq.	Dir. Rot.	Engine % Fwd.	Engine % Rev.	Filler Block	Adapter Assy.	Stud Kit
ONE SPEED - TWO GEAR - MECHANICAL SHIFT															
221ZCAHX-*3	250	Opp	61		7-A-032(P)(29)	328564X	Furnished	221XCAHX-*3	250	Opp	58		7-A-032(29)		Furnished
221ZEAHX-*3	250	Opp	70			328564X	Furnished	221XEAHX-*3	250	Opp	67				Furnished
221ZLAHX-*3	200	Opp	95			328564X	Furnished	221XLAHX-*3	200	Opp	91				Furnished
221ZPAHX-*3	200	Opp	114			328564X	Furnished	221XPAHX-*3	200	Opp	110				Furnished
489XAAHX-*5 (12)	250	Opp	54				Furnished	442XAAHX-*3 (12)	250	Opp	51				Furnished
489XCAHX-*5 (13)	250	Opp	69				Furnished	442XBAHX-*3 (18)	250	Eng	51			REQUIRED	Furnished
489XFAHX-*5 (2)	250	Opp	85				Furnished	442XCAHX-*3 (13)	250	Opp	66				Furnished
489XHAHX-*5 (15)	250	Opp	99				Furnished	442XFAHX-*3 (2)	250	Opp	81				Furnished
489XLAHX-*5 (1)	222	Opp	110				Furnished	442XHAHX-*3 (15)	250	Opp	94				Furnished
489XQAHX-*5 (1)	206	Opp	118				Furnished	442XLAHX-*3 (1)	233	Opp	105				Furnished
489XRAHX-*5 (1)	178	Opp	137				Furnished	442XQAHX-*3 (1)	216	Opp	113				Furnished
489XSAHX-*5 (1)	150	Opp	163				Furnished	442XRAHX-*3 (1)	187	Opp	131				Furnished
489XUAHX-*5 (1)	126	Opp	194				Furnished	442XSAHX-*3 (1)	156	Opp	156				Furnished
489XWAHX-*5 (1)	107	Opp	229				Furnished	442XUAHX-*3 (1)	132	Opp	186				Furnished
489XXAHX-*5 (1)	91	Opp	271				Furnished	442XWAHX-*3 (1)	112	Opp	219				Furnished
680XFAHX-*3 (10)	288	Opp	85				Furnished	442XXAHX-*3 (1)	94	Opp	259				Furnished
680XHAHX-*3 (21)	249	Opp	99				Furnished	660XFAHX-*3 (10)	301	Opp	81				Furnished
680XQAHX-*3 (11)	206	Opp	118				Furnished	660XHAHX-*3 (15)	260	Opp	94				Furnished
680XRAHX-*3 (19)	178	Opp	137				Furnished	660XQAHX-*3 (11)	216	Opp	113				Furnished
680XSAHX-*3 (14)	150	Opp	163				Furnished	660XRAHX-*3 (19)	187	Opp	131				Furnished
823XBAHX-*3 (23)	423	Opp	58				Furnished	660XSAHX-*3 (14)	156	Opp	156				Furnished
823XDAHX-*3 (27)	357	Opp	69				Furnished								
823XGAHX-*3 (28)	329	Opp	74				Furnished								
823XJAHX-*3 (24)	279	Opp	88				Furnished								
823XMAHX-*3 (22)	238	Opp	103				Furnished								
823XRAHX-*3 (26)	172	Opp	142				Furnished								
823XTKTX-*3 (17)	142	Opp	172		8-A-165(29)		Furnished								
880XBAHX-*3 (3)	423	Opp	58				Furnished								
880XDAHX-*3 (4)	357	Opp	69				Furnished								
880XGAHX-*3 (9)	329	Opp	74				Furnished								
880XJAHX-*3 (5)	279	Opp	88				Furnished								
880XMAHX-*3 (6)	238	Opp	103				Furnished								

Continued Next Page

CAUTION: Eaton Transmission Division has established a Maximum Torque Limit for the Transmission PTO Driver Gear. For all RT/RTO/RTLO transmissions the torque limit is 350 Ft-lbs [475 N.m] unless the transmission has been upgraded to a roller type input shaft bearing, Eaton part number 4301417, then 750 Ft-lbs [1017 N.m] torque becomes the Maximum limit. All torque limits on this application page reflect the 350 Ft-lbs [475 N.m] limit at the Transmission PTO Drive Gear. Refer to the Chelsea PTO Torque Limit Chart in the front of this section for complete torque limit information.

CAUTION: Do not use geared adapters with 442 "A" and "C" ratios.

CAUTION: 660/680 Series: Applications above 1500 RPM output shaft speed, contact Chelsea Technical Service for approval. DO NOT use Standard Geared Adapters w/660 Series, contact Chelsea Technical Service.

NOTE: The AK & XK output flanges can not be used with the "A" & "C" ratios on the 489 Series PTOs due to mounting stud interference. Use a RA or RB rotatable flange for the XK and the RA for the AK flange.

NOTE: The 442XBAH must use one of the GEARED ADAPTERS listed on the application page. The direction of rotation shown is the final output shaft rotation w/ geared adapter.

(1) Input Gear Part No. 5-P-1004
(2) Input Gear Part No. 5-P-1077
(3) Input Gear Part No. 5-P-1100
(4) Input Gear Part No. 5-P-1101
(5) Input Gear Part No. 5-P-1102
(6) Input Gear Part No. 5-P-1103
(9) Input Gear Part No. 5-P-1135
(10) Input Gear Part No. 5-P-1242
(11) Input Gear Part No. 5-P-1246
(12) Input Gear Part No. 5-P-1280
(13) Input Gear Part No. 5-P-1287
(14) Input Gear Part No. 5-P-1322
(15) Input Gear Part No. 5-P-1364
(17) Input Gear Part No. 5-P-1395
(18) Input Gear Part No. 5-P-1418
(19) Input Gear Part No. 5-P-1441
(21) Input Gear Part No. 5-P-1494
(22) Input Gear Part No. 5-P-283
(23) Input Gear Part No. 5-P-285
(24) Input Gear Part No. 5-P-325
(26) Input Gear Part No. 5-P-721
(27) Input Gear Part No. 5-P-971
(28) Input Gear Part No. 5-P-980
(29) Filler block furnished with P.T.O.

Parker Hannifin Corporation
Chelsea Products Division
Olive Branch, MS 38654 USA

RT-11609A (Thrushaft option use "AT" mounting)
RT-11709H (Thrushaft option use "AU" mounting)
RT-12609A (Thrushaft option use "AT" mounting)
RT-12709A
RT-12710B (Thrushaft option use "AU" mounting)
RT-13609A (Thrushaft option use "AT" mounting)
RT-13709H (Thrushaft option use "AU" mounting)
RT-13710B (Thrushaft option use "AU" mounting)
RT-14609A (Thrushaft option use "AU" mounting)
RT-14709A
RT-14710B (Thrushaft option use "AU" mounting)
RT-14710B-AS2
RT-14715 (Thrushaft option use "BD" mounting)
RT-14910B-AS2
RT-14915
RT-15715
RT-8709B
RT-8908LL
RT-9710B (Thrushaft option use "AU" mounting)
RTA-14710B-AS
RTF-11609A
RTF-12609A
RTF-12709H
RTF-12710B

BOTTOM SIDE ONLY

TRANSMISSION GEAR DATA:
BOT 08-BOLT Opening Gear FORWARD of Centerline
47 Teeth - SPUR

PITCH LINE TO APERTURE FACE:
0.8050" (20.4500MM)

RIGHT SIDE ONLY

TRANSMISSION GEAR DATA:
R.S. 06-BOLT Opening Gear FORWARD of Centerline
45 Teeth - SPUR

PITCH LINE TO APERTURE FACE:
1.0850" (27.5600MM)

Caution: Application Approval Required for PTO Output Shaft Speeds Above 2500 RPM

BOTTOM Side PTO Model	Inter. Torq.	Dir. Rot.	Engine % Fwd.	Engine % Rev.	Filler Block	Adapter Assy.	Stud Kit	RIGHT Side PTO Model	Inter. Torq.	Dir. Rot.	Engine % Fwd.	Engine % Rev.	Filler Block	Adapter Assy.	Stud Kit
ONE SPEED - TWO GEAR - MECHANICAL SHIFT															
880XQAHX-*3 (16)	203	Opp	120				Furnished								
880XRAHX-*3 (7)	172	Opp	142				Furnished								
880XTAHX-*3 (8)	134	Opp	183				Furnished								
ONE SPEED - TWO GEAR POWERSHIFT (AIR OR HYDRAULIC)															
282XBAJX-*3	300	Opp	58				Furnished	272XAAJX-*3	300	Opp	45				Furnished
282XCAJX-*3	300	Opp	70				Furnished	272XBAJX-*3	300	Opp	55				Furnished
282XDAJX-*3	293	Opp	84				Furnished	272XCAJX-*3	300	Opp	67				Furnished
282XGAJX-*3	257	Opp	95				Furnished	272XGAJX-*3	300	Opp	95				Furnished
282XKAJX-*3	220	Opp	112				Furnished	272XKAJX-*3	300	Opp	106				Furnished
282XMAJX-*3	206	Opp	119				Furnished	272XMAJX-*3	300	Opp	119				Furnished
282XPAJX-*3	184	Opp	133				Furnished	272XPAJX-*3	300	Opp	133				Furnished
282XSAJX-*3	158	Opp	156				Furnished	272XSAJX-*3	300	Opp	149				Furnished
282XTAJX-*3	147	Opp	166				Furnished								
ONE SPEED - TWO GEAR - POWERSHIFT (AIR)															
230XAAJX-*3	250	Opp	45		328481X		Furnished	230XAAJX-*3	250	Opp	43				Furnished
230XBAJX-*3	250	Opp	58		328481X		Furnished	230XBAJX-*3	250	Opp	56				Furnished
230XDAJX-*3	250	Opp	67		328481X		Furnished	230XDAJX-*3	250	Opp	64				Furnished
230XKAJX-*3	250	Opp	91		328481X		Furnished	230XKAJX-*3	250	Opp	87				Furnished
230XQAJX-*3	203	Opp	121		328481X		Furnished	230XQAJX-*3	212	Opp	116				Furnished
230XUAJX-*3	126	Opp	194		328481X		Furnished	230XUAJX-*3	132	Opp	185				Furnished
238XAAHX-*3 (20)	250	Opp	59				Furnished	236XAAHX-*3 (20)	250	Opp	57				Furnished
238XDAHX-*3 (1)	250	Opp	89				Furnished	236XDAHX-*3 (1)	250	Opp	85				Furnished
238XKAHX-*3 (1)	215	Opp	114				Furnished	236XKAHX-*3 (1)	224	Opp	109				Furnished
238XQAHX-*3 (1)	160	Opp	154				Furnished	236XQAHX-*3 (1)	166	Opp	147				Furnished
238XUAHX-*3 (1)	139	Opp	176				Furnished	236XUAHX-*3 (1)	145	Opp	168				Furnished
885XBAHX-*3 (3)	423	Opp	58				Furnished								
885XGAHX-*3 (9)	329	Opp	74				Furnished								
885XJAHX-*3 (5)	279	Opp	88				Furnished								
885XMAHX-*3 (6)	238	Opp	103				Furnished								

Continued Next Page

CAUTION: Eaton Transmission Division has established a Maximum Torque Limit for the Transmission PTO Driver Gear. For all RT/RTO/RTLO transmissions the torque limit is 350 Ft-lbs [475 N.m] unless the transmission has been upgraded to a roller type input shaft bearing, Eaton part number 4301417, then 750 Ft-lbs [1017 N.m] torque becomes the Maximum limit. All torque limits on this application page reflect the 350 Ft-lbs [475 N.m] limit at the Transmission PTO Drive Gear. Refer to the Chelsea PTO Torque Limit Chart in the front of this section for complete torque limit information.

CAUTION: Do not use geared adapters with 442 "A" and "C" ratios.

CAUTION: 660/680 Series: Applications above 1500 RPM output shaft speed, contact Chelsea Technical Service for approval. DO NOT use Standard Geared Adapters w/660 Series, contact Chelsea Technical Service.

NOTE: The AK & XK output flanges can not be used with the "A" & "C" ratios on the 489 Series PTOs due to mounting stud interference. Use a RA or RB rotatable flange for the XK and the RA for the AK flange.

NOTE: The 442XBAH must use one of the GEARED ADAPTERS listed on the application page. The direction of rotation shown is the final output shaft rotation w/ geared adapter.

(1) Input Gear Part No. 5-P-1004
(3) Input Gear Part No. 5-P-1100
(5) Input Gear Part No. 5-P-1102
(6) Input Gear Part No. 5-P-1103
(7) Input Gear Part No. 5-P-1104
(8) Input Gear Part No. 5-P-1105
(9) Input Gear Part No. 5-P-1135
(16) Input Gear Part No. 5-P-1385
(20) Input Gear Part No. 5-P-1486

Parker Hannifin Corporation
Chelsea Products Division
Olive Branch, MS 38654 USA

RT-11609A (Thrushaft option use "AT" mounting)
RT-11709H (Thrushaft option use "AU" mounting)
RT-12609A (Thrushaft option use "AT" mounting)
RT-12709A
RT-12710B (Thrushaft option use "AU" mounting)
RT-13609A (Thrushaft option use "AT" mounting)
RT-13709H (Thrushaft option use "AU" mounting)
RT-13710B (Thrushaft option use "AU" mounting)
RT-14609A (Thrushaft option use "AU" mounting)
RT-14709A
RT-14710B (Thrushaft option use "AU" mounting)
RT-14710B-AS2
RT-14715 (Thrushaft option use "BD" mounting)
RT-14910B-AS2
RT-14915
RT-15715
RT-8709B
RT-8908LL
RT-9710B (Thrushaft option use "AU" mounting)
RTA-14710B-AS
RTF-11609A
RTF-12609A
RTF-12709H
RTF-12710B

BOTTOM SIDE ONLY

TRANSMISSION GEAR DATA:
BOT 08-BOLT Opening Gear FORWARD of Centerline
47 Teeth - SPUR

PITCH LINE TO APERTURE FACE:
0.8050" (20.4500MM)

RIGHT SIDE ONLY

TRANSMISSION GEAR DATA:
R.S. 06-BOLT Opening Gear FORWARD of Centerline
45 Teeth - SPUR

PITCH LINE TO APERTURE FACE:
1.0850" (27.5600MM)

Caution: Application Approval Required for PTO Output Shaft Speeds Above 2500 RPM

BOTTOM Side PTO Model	Inter. Torq.	Dir. Rot.	Engine % Fwd.	Engine % Rev.	Filler Block	Adapter Assy.	Stud Kit	RIGHT Side PTO Model	Inter. Torq.	Dir. Rot.	Engine % Fwd.	Engine % Rev.	Filler Block	Adapter Assy.	Stud Kit
ONE SPEED - FORWARD & REVERSE															
348XFAHX-*5 (25)	200	Opp	74	78			Furnished	340XFAHX-*5 (25)	200	Opp	71	75	7-A-140(29)		Furnished
352ZSAHX-*3 (1)	140	Opp	165	214		328564X	Furnished	352XSAHX-*3 (1)	140	Opp	158	205			Furnished
863XBAHX-*5	423	Opp	58	72			Furnished								
GEARED ADAPTERS															
628XAHX-4AH	250	Eng	0		8-A-032		Furnished	626XAHX-3AH	250	Eng	0				Furnished
								630XAHX-3AH	250	Eng	0				Furnished
								645XAHX-3AH	250	Eng	0				Furnished

Continued Next Page

CAUTION: Eaton Transmission Division has established a Maximum Torque Limit for the Transmission PTO Driver Gear. For all RT/RTO/RTLO transmissions the torque limit is 350 Ft-lbs [475 N.m] unless the transmission has been upgraded to a roller type input shaft bearing, Eaton part number 4301417, then 750 Ft-lbs [1017 N.m] torque becomes the Maximum limit. All torque limits on this application page reflect the 350 Ft-lbs [475 N.m] limit at the Transmission PTO Drive Gear. Refer to the Chelsea PTO Torque Limit Chart in the front of this section for complete torque limit information.

CAUTION: Do not use geared adapters with 442 "A" and "C" ratios.

CAUTION: 660/680 Series: Applications above 1500 RPM output shaft speed, contact Chelsea Technical Service for approval. DO NOT use Standard Geared Adapters w/660 Series, contact Chelsea Technical Service.

NOTE: The AK & XK output flanges can not be used with the "A" & "C" ratios on the 489 Series PTOs due to mounting stud interference. Use a RA or RB rotatable flange for the XK and the RA for the AK flange.

NOTE: The 442XBAH must use one of the GEARED ADAPTERS listed on the application page. The direction of rotation shown is the final output shaft rotation w/ geared adapter.

(1) Input Gear Part No. 5-P-1004
(25) Input Gear Part No. 5-P-581
(29) Filler block furnished with P.T.O.

Parker Hannifin Corporation
Chelsea Products Division
Olive Branch, MS 38654 USA

RT-11609A (Thrushaft option use "AT" mounting)	RT-14609A (Thrushaft option use "AU" mounting)	RT-8709B
RT-11709H (Thrushaft option use "AU" mounting)	RT-14709A	RT-8908LL
RT-12609A (Thrushaft option use "AT" mounting)	RT-14710B (Thrushaft option use "AU" mounting)	RT-9710B (Thrushaft option use "AU" mounting)
RT-12709A	RT-14710B-AS2	RTA-14710B-AS
RT-12710B (Thrushaft option use "AU" mounting)	RT-14715 (Thrushaft option use "BD" mounting)	RTF-11609A
RT-13609A (Thrushaft option use "AT" mounting)	RT-14910B-AS2	RTF-12609A
RT-13709H (Thrushaft option use "AU" mounting)	RT-14915	RTF-12709H
RT-13710B (Thrushaft option use "AU" mounting)	RT-15715	RTF-12710B

REAR SIDE ONLY

TRANSMISSION GEAR DATA:
REAR 03-BOLT Opening

PITCH LINE TO APERTURE FACE:

Caution: Application Approval Required for PTO Output Shaft Speeds Above 2500 RPM

REAR Side PTO Model	Inter. Torq.	Dir. Rot.	Engine %		Filler Block	Adapter Assy.	Stud Kit		Inter. Torq.	Dir. Rot.	Engine %		Filler Block	Adapter Assy.	Stud Kit
			Fwd.	Rev.							Fwd.	Rev.			
REAR MOUNT - "AT" MOUNTING OPTION															
541-LAT-*-*	400	Eng	67				Furnished								
541-MAT-*-*	350	Eng	87				Furnished								
541-NAT-*-*	300	Eng	99				Furnished								
REAR MOUNT - "AU" MOUNTING OPTION															
541-LAU-*-*	400	Eng	67				Furnished								
541-MAU-*-*	350	Eng	87				Furnished								
541-NAU-*-*	300	Eng	99				Furnished								
REAR MOUNT - "BD" MOUNTING OPTION															
541-LBD-*-*	400	Eng	67				Furnished								
541-MBD-*-*	350	Eng	87				Furnished								
541-NBD-*-*	300	Eng	99				Furnished								

CAUTION: Eaton Transmission Division has established a Maximum Torque Limit for the Transmission PTO Driver Gear. For all RT/RTO/RTLO transmissions the torque limit is 350 Ft-lbs [475 N.m] unless the transmission has been upgraded to a roller type input shaft bearing, Eaton part number 4301417, then 750 Ft-lbs [1017 N.m] torque becomes the Maximum limit. All torque limits on this application page reflect the 350 Ft-lbs [475 N.m] limit at the Transmission PTO Drive Gear. Refer to the Chelsea PTO Torque Limit Chart in the front of this section for complete torque limit information.

CAUTION: Do not use geared adapters with 442 "A" and "C" ratios.

CAUTION: 660/680 Series: Applications above 1500 RPM output shaft speed, contact Chelsea Technical Service for approval. DO NOT use Standard Geared Adapters w/660 Series, contact Chelsea Technical Service.

NOTE: The AK & XK output flanges can not be used with the "A" & "C" ratios on the 489 Series PTOs due to mounting stud interference. Use a RA or RB rotatable flange for the XK and the RA for the AK flange.

NOTE: The 442XBAH must use one of the GEARED ADAPTERS listed on the application page. The direction of rotation shown is the final output shaft rotation w/ geared adapter.

Parker Hannifin Corporation
Chelsea Products Division
Olive Branch, MS 38654 USA

RT-6610
RT-6613
RTO-7613

BOTTOM SIDE ONLY

TRANSMISSION GEAR DATA:
BOT 08-BOLT Opening Gear REAR of Centerline
33 Teeth - SPUR

PITCH LINE TO APERTURE FACE:
0.8050" (20.4500MM)

RIGHT SIDE ONLY

TRANSMISSION GEAR DATA:
R.S. 06-BOLT Opening Gear REAR of Centerline
33 Teeth - SPUR

PITCH LINE TO APERTURE FACE:
1.0850" (27.5600MM)

Caution: Application Approval Required for PTO Output Shaft Speeds Above 2500 RPM

ONE SPEED - TWO GEAR - MECHANICAL SHIFT

BOTTOM Side PTO Model	Inter. Torq.	Dir. Rot.	Engine % Fwd.	Engine % Rev.	Filler Block	Adapter Assy.	Stud Kit	RIGHT Side PTO Model	Inter. Torq.	Dir. Rot.	Engine % Fwd.	Engine % Rev.	Filler Block	Adapter Assy.	Stud Kit
221ZCAHX-*6	250	Opp	44		7-A-032(P)(26)	328564X	Furnished	221XCAHX-*6	250	Opp	44		7-A-032(26)		Furnished
221ZEAHX-*6	250	Opp	51			328564X	Furnished	221XEAHX-*6	250	Opp	51				Furnished
221ZLAHX-*6	200	Opp	69			328564X	Furnished	221XLAHX-*6	200	Opp	69				Furnished
221ZPAHX-*6	140	Opp	83			328564X	Furnished	221XPAHX-*6	200	Opp	83				Furnished
489XFAHX-*5 (2)	250	Opp	62				Furnished	442XFAHX-*6 (2)	250	Opp	62				Furnished
489XHAHX-*5 (13)	250	Opp	72				Furnished	442XHAHX-*6 (13)	250	Opp	72				Furnished
489XLAHX-*5 (1)	250	Opp	80				Furnished	442XLAHX-*6 (1)	250	Opp	80				Furnished
489XQAHX-*5 (1)	225	Opp	86				Furnished	442XQAHX-*6 (1)	225	Opp	86				Furnished
489XRAHX-*5 (1)	225	Opp	99				Furnished	442XRAHX-*6 (1)	225	Opp	99				Furnished
489XSAHX-*5 (1)	200	Opp	118				Furnished	442XSAHX-*6 (1)	200	Opp	118				Furnished
489XUAHX-*5 (1)	195	Opp	141				Furnished	442XUAHX-*6 (1)	195	Opp	141				Furnished
489XWAHX-*5 (1)	175	Opp	166				Furnished	442XWAHX-*6 (1)	175	Opp	166				Furnished
489XXAHX-*5 (1)	140	Opp	196				Furnished	442XXAHX-*6 (1)	140	Opp	196				Furnished
680XFAHX-*6 (10)	375	Opp	62				Furnished	660XFAHX-*6 (10)	375	Opp	62				Furnished
680XHAHX-*6 (18)	375	Opp	72				Furnished	660XHAHX-*6 (13)	375	Opp	72				Furnished
680XQAHX-*6 (11)	375	Opp	86				Furnished	660XQAHX-*6 (11)	375	Opp	86				Furnished
680XRAHX-*6 (16)	350	Opp	99				Furnished	660XRAHX-*6 (16)	350	Opp	99				Furnished
680XSAHX-*6 (12)	325	Opp	118				Furnished	660XSAHX-*6 (12)	325	Opp	118				Furnished
823XBAHX-*6 (20)	500	Opp	42				Furnished								
823XDAHX-*6 (24)	500	Opp	50				Furnished								
823XGAHX-*6 (25)	500	Opp	54				Furnished								
823XJAHX-*6 (21)	500	Eng	64				Furnished								
823XMAHX-*6 (19)	500	Opp	75				Furnished								
823XRAHX-*6 (23)	400	Opp	103				Furnished								
823XTKTX-*6 (15)	372	Opp	125		8-A-165(26)		Furnished								
880XBAHX-*6 (3)	500	Opp	42				Furnished								
880XDAHX-*6 (4)	500	Opp	50				Furnished								
880XGAHX-*6 (9)	500	Opp	54				Furnished								
880XJAHX-*6 (5)	500	Opp	64				Furnished								
880XMAHX-*6 (6)	500	Opp	75				Furnished								
880XQAHX-*6 (14)	450	Opp	87				Furnished								

Continued Next Page

CAUTION: Do not use geared adapters with 442 "A" and "C" ratios.

CAUTION: 660/680 Series: Applications above 1500 RPM output shaft speed, contact Chelsea Technical Service for approval. DO NOT use Standard Geared Adapters w/660 Series, contact Chelsea Technical Service.

NOTE: All PTOs on RH side require assembly arrangement "6" to put output shaft above center. This will clear the bulge in the transmission. A direct mount pump will interfere with the bulge.

NOTE: The AK & XK output flanges can not be used with the "A" & "C" ratios on the 489 Series PTOs due to mounting stud interference. Use a RA or RB rotatable flange for the XK and the RA for the AK flange.

NOTE: If Ordering the 230/231 Series with the Shaft Brake Option, order the "BA" Output for Automatic Transmissions and the "BD" Output for Manual Transmissions.

(1) Input Gear Part No. 5-P-1004
(2) Input Gear Part No. 5-P-1077
(3) Input Gear Part No. 5-P-1100
(4) Input Gear Part No. 5-P-1101
(5) Input Gear Part No. 5-P-1102
(6) Input Gear Part No. 5-P-1103
(9) Input Gear Part No. 5-P-1135
(10) Input Gear Part No. 5-P-1242
(11) Input Gear Part No. 5-P-1246
(12) Input Gear Part No. 5-P-1322
(13) Input Gear Part No. 5-P-1364
(14) Input Gear Part No. 5-P-1385
(15) Input Gear Part No. 5-P-1395
(16) Input Gear Part No. 5-P-1441
(18) Input Gear Part No. 5-P-1494
(19) Input Gear Part No. 5-P-283
(20) Input Gear Part No. 5-P-285
(21) Input Gear Part No. 5-P-325
(23) Input Gear Part No. 5-P-721
(24) Input Gear Part No. 5-P-971
(25) Input Gear Part No. 5-P-980
(26) Filler block furnished with P.T.O.

Parker Hannifin Corporation
Chelsea Products Division
Olive Branch, MS 38654 USA

RT-6610
RT-6613
RTO-7613

BOTTOM SIDE ONLY

TRANSMISSION GEAR DATA:
BOT 08-BOLT Opening Gear REAR of Centerline
33 Teeth - SPUR

PITCH LINE TO APERTURE FACE:
0.8050" (20.4500MM)

RIGHT SIDE ONLY

TRANSMISSION GEAR DATA:
R.S. 06-BOLT Opening Gear REAR of Centerline
33 Teeth - SPUR

PITCH LINE TO APERTURE FACE:
1.0850" (27.5600MM)

Caution: Application Approval Required for PTO Output Shaft Speeds Above 2500 RPM

BOTTOM Side PTO Model	Inter. Torq.	Dir. Rot.	Engine % Fwd.	Engine % Rev.	Filler Block	Adapter Assy.	Stud Kit	RIGHT Side PTO Model	Inter. Torq.	Dir. Rot.	Engine % Fwd.	Engine % Rev.	Filler Block	Adapter Assy.	Stud Kit
ONE SPEED - TWO GEAR - MECHANICAL SHIFT															
880XRAHX-*6 (7)	400	Opp	103				Furnished								
880XTAHX-*6 (8)	350	Opp	133				Furnished								
ONE SPEED - TWO GEAR - POWERSHIFT (AIR)															
230XAAJX-*6	250	Opp	32			328481X	Furnished	230XAAJX-*6	250	Opp	32				Furnished
230XBAJX-*6	250	Opp	42			328481X	Furnished	230XBAJX-*6	250	Opp	42				Furnished
230XDAJX-*6	250	Opp	49			328481X	Furnished	230XDAJX-*6	250	Opp	49				Furnished
230XKAJX-*6	250	Opp	66			328481X	Furnished	230XKAJX-*6	250	Opp	66				Furnished
230XQAJX-*6	250	Opp	88			328481X	Furnished	230XQAJX-*6	250	Opp	88				Furnished
230XUAJX-*6	225	Opp	140			328481X	Furnished	230XUAJX-*6	225	Opp	140				Furnished
238XAAHX-*6 (17)	250	Opp	43				Furnished	236XAAHX-*6 (17)	250	Opp	43				Furnished
238XDAHX-*6 (1)	250	Opp	65				Furnished	236XDAHX-*6 (1)	250	Opp	65				Furnished
238XKAHX-*6 (1)	250	Opp	82				Furnished	236XKAHX-*6 (1)	250	Opp	82				Furnished
238XQAHX-*6 (1)	250	Opp	111				Furnished	236XQAHX-*6 (1)	250	Opp	111				Furnished
238XUAHX-*6 (1)	225	Opp	127				Furnished	236XUAHX-*6 (1)	225	Opp	127				Furnished
885XBAHX-*6 (3)	500	Opp	42				Furnished								
885XGAHX-*6 (9)	500	Opp	54				Furnished								
885XJAHX-*6 (5)	500	Opp	64				Furnished								
885XMAHX-*6 (6)	500	Opp	75				Furnished								
ONE SPEED - FORWARD & REVERSE															
348XFAHX-*4 (22)	200	Opp	54	56			Furnished	340XFAHX-*4 (22)	200	Opp	54	56	7-A-140(26)		Furnished
352ZSAHX-*4 (1)	140	Opp	120	155		328564X	Furnished	352XSAHX-*6 (1)	140	Opp	120	155			Furnished
863XBAHX-*4	500	Opp	42	52			Furnished								
GEARED ADAPTERS															
628XAHX-4AH	250	Eng	0		8-A-032		Furnished	626XAHX-4AH	250	Eng	0				Furnished
								630XAHX-4AH	250	Eng	0				Furnished
								645XAHX-4AH	250	Eng	0				Furnished

CAUTION: Do not use geared adapters with 442 "A" and "C" ratios.

CAUTION: 660/680 Series: Applications above 1500 RPM output shaft speed, contact Chelsea Technical Service for approval. DO NOT use Standard Geared Adapters w/660 Series, contact Chelsea Technical Service.

NOTE: All PTOs on RH side require assembly arrangement "6" to put output shaft above center. This will clear the bulge in the transmission. A direct mount pump will interfere with the bulge.

NOTE: The AK & XK output flanges can not be used with the "A" & "C" ratios on the 489 Series PTOs due to mounting stud interference. Use a RA or RB rotatable flange for the XK and the RA for the AK flange.

NOTE: If Ordering the 230/231 Series with the Shaft Brake Option, order the "BA" Output for Automatic Transmissions and the "BD" Output for Manual Transmissions.

(1) Input Gear Part No. 5-P-1004
(3) Input Gear Part No. 5-P-1100
(5) Input Gear Part No. 5-P-1102
(6) Input Gear Part No. 5-P-1103
(7) Input Gear Part No. 5-P-1104
(8) Input Gear Part No. 5-P-1105
(9) Input Gear Part No. 5-P-1135
(17) Input Gear Part No. 5-P-1486
(22) Input Gear Part No. 5-P-581
(26) Filler block furnished with P.T.O.

Parker Hannifin Corporation
Chelsea Products Division
Olive Branch, MS 38654 USA

RTO-6610
RTO-6613

BOTTOM SIDE ONLY

TRANSMISSION GEAR DATA:
BOT 08-BOLT Opening Gear REAR of Centerline
33 Teeth - SPUR

PITCH LINE TO APERTURE FACE:
0.8050" (20.4500MM)

RIGHT SIDE ONLY

TRANSMISSION GEAR DATA:
R.S. 06-BOLT Opening Gear REAR of Centerline
33 Teeth - SPUR

PITCH LINE TO APERTURE FACE:
1.0850" (27.5600MM)

Caution: Application Approval Required for PTO Output Shaft Speeds Above 2500 RPM

ONE SPEED - TWO GEAR - MECHANICAL SHIFT

BOTTOM Side PTO Model	Inter. Torq.	Dir. Rot.	Engine % Fwd.	Engine % Rev.	Filler Block	Adapter Assy.	Stud Kit	RIGHT Side PTO Model	Inter. Torq.	Dir. Rot.	Engine % Fwd.	Engine % Rev.	Filler Block	Adapter Assy.	Stud Kit
221ZCAHX-*6	250	Opp	55		7-A-032(P)(26)	328564X	Furnished	221XCAHX-*6	250	Opp	55		7-A-032(26)		Furnished
221ZEAHX-*6	250	Opp	63			328564X	Furnished	221XEAHX-*6	250	Opp	63				Furnished
221ZLAHX-*6	200	Opp	85			328564X	Furnished	221XLAHX-*6	200	Opp	85				Furnished
221ZPAHX-*6	140	Opp	103			328564X	Furnished	221XPAHX-*6	200	Opp	103				Furnished
489XFAHX-*5 (2)	250	Opp	76				Furnished	442XFAHX-*6 (2)	250	Opp	76				Furnished
489XHAHX-*5 (13)	250	Opp	88				Furnished	442XHAHX-*6 (13)	250	Opp	88				Furnished
489XLAHX-*5 (1)	250	Opp	99				Furnished	442XLAHX-*6 (1)	250	Opp	99				Furnished
489XQAHX-*5 (1)	225	Opp	106				Furnished	442XQAHX-*6 (1)	225	Opp	106				Furnished
489XRAHX-*5 (1)	225	Opp	123				Furnished	442XRAHX-*6 (1)	225	Opp	123				Furnished
489XSAHX-*5 (1)	200	Opp	147				Furnished	442XSAHX-*6 (1)	200	Opp	147				Furnished
489XUAHX-*5 (1)	195	Opp	175				Furnished	442XUAHX-*6 (1)	195	Opp	175				Furnished
489XWAHX-*5 (1)	175	Opp	206				Furnished	442XWAHX-*6 (1)	175	Opp	206				Furnished
489XXAHX-*5 (1)	140	Opp	243				Furnished	442XXAHX-*6 (1)	140	Opp	243				Furnished
680XFAHX-*6 (10)	375	Opp	76				Furnished	660XFAHX-*6 (10)	375	Opp	76				Furnished
680XHAHX-*6 (18)	375	Opp	88				Furnished	660XHAHX-*6 (13)	375	Opp	88				Furnished
680XQAHX-*6 (11)	375	Opp	106				Furnished	660XQAHX-*6 (11)	375	Opp	106				Furnished
680XRAHX-*6 (16)	350	Opp	123				Furnished	660XRAHX-*6 (16)	350	Opp	123				Furnished
680XSAHX-*6 (12)	325	Opp	147				Furnished	660XSAHX-*6 (12)	325	Opp	147				Furnished
823XBAHX-*6 (20)	500	Opp	52				Furnished								
823XDAHX-*6 (24)	500	Opp	62				Furnished								
823XGAHX-*6 (25)	500	Opp	67				Furnished								
823XJAHX-*6 (21)	500	Eng	79				Furnished								
823XMAHX-*6 (19)	500	Opp	92				Furnished								
823XRAHX-*6 (23)	400	Opp	128				Furnished								
823XTKTX-*6 (15)	372	Opp	154		8-A-165(26)		Furnished								
880XBAHX-*6 (3)	500	Opp	52				Furnished								
880XDAHX-*6 (4)	500	Opp	62				Furnished								
880XGAHX-*6 (9)	500	Opp	67				Furnished								
880XJAHX-*6 (5)	500	Opp	79				Furnished								
880XMAHX-*6 (6)	500	Opp	92				Furnished								
880XQAHX-*6 (14)	450	Opp	109				Furnished								

Continued Next Page

CAUTION: Do not use geared adapters with 442 "A" and "C" ratios.

CAUTION: 660/680 Series: Applications above 1500 RPM output shaft speed, contact Chelsea Technical Service for approval. DO NOT use Standard Geared Adapters w/660 Series, contact Chelsea Technical Service.

NOTE: All PTOs on R.H. side require assembly arrangement "6" to put output shaft above center. This will clear the bulge in the transmission. A direct mount pump will interfere with the bulge.

NOTE: The AK & XK output flanges can not be used with the "A" & "C" ratios on the 489 Series PTOs due to mounting stud interference. Use a RA or RB rotatable flange for the XK and the RA for the AK flange.

NOTE: If Ordering the 230/231 Series with the Shaft Brake Option, order the "BA" Output for Automatic Transmissions and the "BD" Output for Manual Transmissions.

(1) Input Gear Part No. 5-P-1004
(2) Input Gear Part No. 5-P-1077
(3) Input Gear Part No. 5-P-1100
(4) Input Gear Part No. 5-P-1101
(5) Input Gear Part No. 5-P-1102
(6) Input Gear Part No. 5-P-1103
(9) Input Gear Part No. 5-P-1135
(10) Input Gear Part No. 5-P-1242
(11) Input Gear Part No. 5-P-1246
(12) Input Gear Part No. 5-P-1322
(13) Input Gear Part No. 5-P-1364
(14) Input Gear Part No. 5-P-1385
(15) Input Gear Part No. 5-P-1395
(16) Input Gear Part No. 5-P-1441
(18) Input Gear Part No. 5-P-1494
(19) Input Gear Part No. 5-P-283
(20) Input Gear Part No. 5-P-285
(21) Input Gear Part No. 5-P-325
(23) Input Gear Part No. 5-P-721
(24) Input Gear Part No. 5-P-971
(25) Input Gear Part No. 5-P-980
(26) Filler block furnished with P.T.O.

Parker Hannifin Corporation
Chelsea Products Division
Olive Branch, MS 38654 USA

RTO-6610
RTO-6613

BOTTOM SIDE ONLY

TRANSMISSION GEAR DATA:
BOT 08-BOLT Opening Gear REAR of Centerline
33 Teeth - SPUR

PITCH LINE TO APERTURE FACE:
0.8050" (20.4500MM)

RIGHT SIDE ONLY

TRANSMISSION GEAR DATA:
R.S. 06-BOLT Opening Gear REAR of Centerline
33 Teeth - SPUR

PITCH LINE TO APERTURE FACE:
1.0850" (27.5600MM)

Caution: Application Approval Required for PTO Output Shaft Speeds Above 2500 RPM

BOTTOM Side PTO Model	Inter. Torq.	Dir. Rot.	Engine % Fwd.	Engine % Rev.	Filler Block	Adapter Assy.	Stud Kit	RIGHT Side PTO Model	Inter. Torq.	Dir. Rot.	Engine % Fwd.	Engine % Rev.	Filler Block	Adapter Assy.	Stud Kit
ONE SPEED - TWO GEAR - MECHANICAL SHIFT															
880XRAHX-*6 (7)	400	Opp	128				Furnished								
880XTAHX-*6 (8)	350	Opp	164				Furnished								
ONE SPEED - TWO GEAR - POWERSHIFT (AIR)															
230XAAJX-*6	250	Opp	40			328481X	Furnished	230XAAJX-*6	250	Opp	40				Furnished
230XBAJX-*6	250	Opp	52			328481X	Furnished	230XBAJX-*6	250	Opp	52				Furnished
230XDAJX-*6	250	Opp	60			328481X	Furnished	230XDAJX-*6	250	Opp	60				Furnished
230XKAJX-*6	250	Opp	82			328481X	Furnished	230XKAJX-*6	250	Opp	82				Furnished
230XQAJX-*6	250	Opp	109			328481X	Furnished	230XQAJX-*6	250	Opp	109				Furnished
230XUAJX-*6	225	Opp	174			328481X	Furnished	230XUAJX-*6	225	Opp	174				Furnished
238XAAHX-*6 (17)	250	Opp	53				Furnished	236XAAHX-*6 (17)	250	Opp	53				Furnished
238XDAHX-*6 (1)	250	Opp	80				Furnished	236XDAHX-*6 (1)	250	Opp	80				Furnished
238XKAHX-*6 (1)	250	Opp	102				Furnished	236XKAHX-*6 (1)	250	Opp	102				Furnished
238XQAHX-*6 (1)	250	Opp	138				Furnished	236XQAHX-*6 (1)	250	Opp	138				Furnished
238XUAHX-*6 (1)	225	Opp	158				Furnished	236XUAHX-*6 (1)	225	Opp	158				Furnished
885XBAHX-*6 (3)	500	Opp	52				Furnished								
885XGAHX-*6 (9)	500	Opp	67				Furnished								
885XJAHX-*6 (5)	500	Opp	79				Furnished								
885XMAHX-*6 (6)	500	Opp	92				Furnished								
ONE SPEED - FORWARD & REVERSE															
348XFAHX-*4 (22)	200	Opp	67	70			Furnished	340XFAHX-*4 (22)	200	Opp	67	70	7-A-140(26)		Furnished
352ZSAHX-*6 (1)	140	Opp	149	192		328564X	Furnished	352XSAHX-*6 (1)	140	Opp	149	192			Furnished
863XBAHX-*4	500	Opp	52	64			Furnished								
GEARED ADAPTERS															
628XAHX-4AH	250	Eng	0				Furnished	626XAHX-4AH	250	Eng	0				Furnished
								630XAHX-4AH	250	Eng	0				Furnished
								645XAHX-4AH	250	Eng	0				Furnished

CAUTION: Do not use geared adapters with 442 "A" and "C" ratios.

CAUTION: 660/680 Series: Applications above 1500 RPM output shaft speed, contact Chelsea Technical Service for approval. DO NOT use Standard Geared Adapters w/660 Series, contact Chelsea Technical Service.

NOTE: All PTOs on R.H. side require assembly arrangement "6" to put output shaft above center. This will clear the bulge in the transmission. A direct mount pump will interfere with the bulge.

NOTE: The AK & XK output flanges can not be used with the "A" & "C" ratios on the 489 Series PTOs due to mounting stud interference. Use a RA or RB rotatable flange for the XK and the RA for the AK flange.

NOTE: If Ordering the 230/231 Series with the Shaft Brake Option, order the "BA" Output for Automatic Transmissions and the "BD" Output for Manual Transmissions.

(1) Input Gear Part No. 5-P-1004
(3) Input Gear Part No. 5-P-1100
(5) Input Gear Part No. 5-P-1102
(6) Input Gear Part No. 5-P-1103
(7) Input Gear Part No. 5-P-1104
(8) Input Gear Part No. 5-P-1105
(9) Input Gear Part No. 5-P-1135
(17) Input Gear Part No. 5-P-1486
(22) Input Gear Part No. 5-P-581
(26) Filler block furnished with P.T.O.

Parker Hannifin Corporation
Chelsea Products Division
Olive Branch, MS 38654 USA

RTAO-10710B-AC	RTAO-16710B-AS	RTO-14710B-AS2
RTAO-10710B-AS	RTO-10710B-AS2	RTO-14908LL
RTAO-12710B-AC	RTO-10910B-AS2	RTO-14910B-AS2
RTAO-12710B-AS	RTO-10910B-AS3	RTO-14910B-AS3
RTAO-14710B-AC	RTO-11908LL	RTO-16710B
RTAO-14710B-AC	RTO-12710B-AS2	RTO-16710B-AS2
RTAO-14710B-AS	RTO-12910B-AS2 (Thrushaft option use AT mounting)	RTO-16908LL (Thrushaft use BD mounting)
RTAO-16710B-AC	RTO-12910B-AS3 (Thrushaft option use AT mounting)	RTO-16910B-AS2

BOTTOM SIDE ONLY

TRANSMISSION GEAR DATA:
BOT 08-BOLT Opening Gear FORWARD of Centerline
47 Teeth - SPUR

PITCH LINE TO APERTURE FACE:
0.8050" (20.4500MM)

RIGHT SIDE ONLY

TRANSMISSION GEAR DATA:
R.S. 06-BOLT Opening Gear FORWARD of Centerline
45 Teeth - SPUR

PITCH LINE TO APERTURE FACE:
1.0850" (27.5600MM)

Caution: Application Approval Required for PTO Output Shaft Speeds Above 2500 RPM

ONE SPEED - TWO GEAR - MECHANICAL SHIFT

BOTTOM Side PTO Model	Inter. Torq.	Dir. Rot.	Engine % Fwd.	Engine % Rev.	Filler Block	Adapter Assy.	Stud Kit	RIGHT Side PTO Model	Inter. Torq.	Dir. Rot.	Engine % Fwd.	Engine % Rev.	Filler Block	Adapter Assy.	Stud Kit
221ZCAHX-*3	250	Opp	82		7-A-032(P)(29)	328564X	Furnished	221XCAHX-*3	250	Opp	79		7-A-032(29)		Furnished
221ZEAHX-*3	250	Opp	95			328564X	Furnished	221XEAHX-*3	250	Opp	91				Furnished
221ZLAHX-*3	200	Opp	128			328564X	Furnished	221XLAHX-*3	200	Opp	122				Furnished
221ZPAHX-*3	200	Opp	154			328564X	Furnished	221XPAHX-*3	200	Opp	148				Furnished
489XAAHX-*5 (12)	250	Opp	72				Furnished	442XAAHX-*3 (12)	250	Opp	69				Furnished
489XCAHX-*5 (13)	250	Opp	93				Furnished	442XBAHX-*3 (18)	250	Eng	69			REQUIRED	Furnished
489XFAHX-*5 (2)	250	Opp	114				Furnished	442XCAHX-*3 (13)	250	Opp	89				Furnished
489XHAHX-*5 (15)	250	Opp	132				Furnished	442XFAHX-*3 (2)	250	Opp	110				Furnished
489XLAHX-*5 (1)	222	Opp	148				Furnished	442XHAHX-*3 (15)	250	Opp	127				Furnished
489XQAHX-*5 (1)	206	Opp	160				Furnished	442XLAHX-*3 (1)	233	Opp	142				Furnished
489XRAHX-*5 (1)	178	Opp	185				Furnished	442XQAHX-*3 (1)	216	Opp	153				Furnished
489XSAHX-*5 (1)	150	Opp	220				Furnished	442XRAHX-*3 (1)	187	Opp	177				Furnished
489XUAHX-*5 (1)	126	Opp	262				Furnished	442XSAHX-*3 (1)	156	Opp	211				Furnished
489XWAHX-*5 (1)	107	Opp	308				Furnished	442XUAHX-*3 (1)	132	Opp	251				Furnished
489XXAHX-*5 (1)	91	Opp	365				Furnished	442XWAHX-*3 (1)	112	Opp	295				Furnished
680XFAHX-*3 (10)	288	Opp	114				Furnished	442XXAHX-*3 (1)	94	Opp	349				Furnished
680XHAHX-*3 (21)	249	Opp	132				Furnished	660XFAHX-*3 (10)	301	Opp	110				Furnished
680XQAHX-*3 (11)	206	Opp	160				Furnished	660XHAHX-*3 (15)	260	Opp	127				Furnished
680XRAHX-*3 (19)	178	Opp	185				Furnished	660XQAHX-*3 (11)	216	Opp	153				Furnished
680XSAHX-*3 (14)	150	Opp	220				Furnished	660XRAHX-*3 (19)	187	Opp	177				Furnished
823XBAHX-*3 (23)	423	Opp	78				Furnished	660XSAHX-*3 (14)	156	Opp	211				Furnished
823XDAHX-*3 (27)	357	Opp	92				Furnished								
823XGAHX-*3 (28)	329	Opp	100				Furnished								
823XJAHX-*3 (24)	279	Opp	118				Furnished								
823XMAHX-*3 (22)	238	Opp	139				Furnished								
823XRAHX-*3 (26)	172	Opp	191				Furnished								
823XTKTX-*3 (17)	142	Opp	231		8-A-165(29)		Furnished								
880XBAHX-*3 (3)	423	Opp	78				Furnished								
880XDAHX-*3 (4)	357	Opp	92				Furnished								
880XGAHX-*3 (9)	329	Opp	100				Furnished								
880XJAHX-*3 (5)	279	Opp	118				Furnished								
880XMAHX-*3 (6)	238	Opp	139				Furnished								

Continued Next Page

CAUTION: Eaton Transmission Division has established a Maximum Torque Limit for the Transmission PTO Driver Gear. For all RT/RTO/RTLO transmissions the torque limit is 350 Ft-lbs [475 N.m] unless the transmission has been upgraded to a roller type input shaft bearing, Eaton part number 4301417, then 750 Ft-lbs [1017 N.m] torque becomes the Maximum limit. All torque limits on this application page reflect the 350 Ft-lbs [475 N.m] limit at the Transmission PTO Drive Gear. Refer to the Chelsea PTO Torque Limit Chart in the front of this section for complete torque limit information.

CAUTION: Do Not Use Geared Adapters with 442 "A" and "C" ratios.

CAUTION: 660/680 Series: Applications above 1500 RPM output shaft speed, contact Chelsea Technical Service for approval. DO NOT use Standard Geared Adapters w/660 Series, contact Chelsea Technical Service.

NOTE: The AK & XK output flanges can not be used with the "A" & "C" ratios on the 489 Series PTOs due to mounting stud interference. Use a RA or RB rotatable flange for the XK and the RA for the AK flange.

NOTE: The 442XBAH must use one of the geared adapters listed on the application page. The direction of rotation shown is the final output shaft rotation w/ geared adapter.

(1) Input Gear Part No. 5-P-1004
(2) Input Gear Part No. 5-P-1077
(3) Input Gear Part No. 5-P-1100
(4) Input Gear Part No. 5-P-1101
(5) Input Gear Part No. 5-P-1102
(6) Input Gear Part No. 5-P-1103
(9) Input Gear Part No. 5-P-1135
(10) Input Gear Part No. 5-P-1242
(11) Input Gear Part No. 5-P-1246
(12) Input Gear Part No. 5-P-1280
(13) Input Gear Part No. 5-P-1287
(14) Input Gear Part No. 5-P-1322
(15) Input Gear Part No. 5-P-1364
(17) Input Gear Part No. 5-P-1395
(18) Input Gear Part No. 5-P-1418
(19) Input Gear Part No. 5-P-1441
(21) Input Gear Part No. 5-P-1494
(22) Input Gear Part No. 5-P-283
(23) Input Gear Part No. 5-P-285
(24) Input Gear Part No. 5-P-325
(26) Input Gear Part No. 5-P-721
(27) Input Gear Part No. 5-P-971
(28) Input Gear Part No. 5-P-980
(29) Filler block furnished with P.T.O.

Parker Hannifin Corporation
Chelsea Products Division
Olive Branch, MS 38654 USA

RTAO-10710B-AC	RTAO-16710B-AS	RTO-14710B-AS2
RTAO-10710B-AS	RTO-10710B-AS2	RTO-14908LL
RTAO-12710B-AC	RTO-10910B-AS2	RTO-14910B-AS2
RTAO-12710B-AS	RTO-10910B-AS3	RTO-14910B-AS3
RTAO-14710B-AC	RTO-11908LL	RTO-16710B
RTAO-14710B-AC	RTO-12710B-AS2	RTO-16710B-AS2
RTAO-14710B-AS	RTO-12910B-AS2 (Thrushaft option use AT mounting)	RTO-16908LL (Thrushaft use BD mounting)
RTAO-16710B-AC	RTO-12910B-AS3 (Thrushaft option use AT mounting)	RTO-16910B-AS2

BOTTOM SIDE ONLY

TRANSMISSION GEAR DATA:
BOT 08-BOLT Opening Gear FORWARD of Centerline
47 Teeth - SPUR

PITCH LINE TO APERTURE FACE:
0.8050" (20.4500MM)

RIGHT SIDE ONLY

TRANSMISSION GEAR DATA:
R.S. 06-BOLT Opening Gear FORWARD of Centerline
45 Teeth - SPUR

PITCH LINE TO APERTURE FACE:
1.0850" (27.5600MM)

Caution: Application Approval Required for PTO Output Shaft Speeds Above 2500 RPM

BOTTOM Side PTO Model	Inter. Torq.	Dir. Rot.	Engine % Fwd.	Engine % Rev.	Filler Block	Adapter Assy.	Stud Kit	RIGHT Side PTO Model	Inter. Torq.	Dir. Rot.	Engine % Fwd.	Engine % Rev.	Filler Block	Adapter Assy.	Stud Kit
ONE SPEED - TWO GEAR - MECHANICAL SHIFT															
880XQAHX-*3 (16)	203	Opp	162				Furnished								
880XRAHX-*3 (7)	172	Opp	191				Furnished								
880XTAHX-*3 (8)	134	Opp	246				Furnished								
ONE SPEED - TWO GEAR POWERSHIFT (AIR OR HYDRAULIC)															
282XBAJX-*3	300	Opp	78				Furnished	272XAAJX-*3	300	Opp	61				Furnished
282XCAJX-*3	300	Opp	94				Furnished	272XBAJX-*3	300	Opp	75				Furnished
282XDAJX-*3	293	Opp	113				Furnished	272XCAJX-*3	300	Opp	90				Furnished
282XGAJX-*3	246	Opp	134				Furnished	272XGAJX-*3	300	Opp	128				Furnished
282XKAJX-*3	220	Opp	150				Furnished	272XKAJX-*3	300	Opp	144				Furnished
282XMAJX-*3	197	Opp	168				Furnished	272XMAJX-*3	300	Opp	161				Furnished
282XPAJX-*3	176	Opp	187				Furnished	272XPAJX-*3	300	Opp	180				Furnished
282XSAJX-*3	158	Opp	209				Furnished	272XSAJX-*3	300	Opp	201				Furnished
282XTAJX-*3	141	Opp	234				Furnished								
ONE SPEED - TWO GEAR - POWERSHIFT (AIR)															
230XAAJX-*3	250	Opp	60		328481X		Furnished	230XAAJX-*3	250	Opp	58				Furnished
230XBAJX-*3	250	Opp	78		328481X		Furnished	230XBAJX-*3	250	Opp	75				Furnished
230XDAJX-*3	250	Opp	91		328481X		Furnished	230XDAJX-*3	250	Opp	87				Furnished
230XKAJX-*3	250	Opp	123		328481X		Furnished	230XKAJX-*3	250	Opp	117				Furnished
230XQAJX-*3	203	Opp	163		328481X		Furnished	230XQAJX-*3	212	Opp	156				Furnished
230XUAJX-*3	126	Opp	261		328481X		Furnished	230XUAJX-*3	132	Opp	250				Furnished
238XAAHX-*3 (20)	250	Opp	80				Furnished	236XAAHX-*3 (20)	250	Opp	76				Furnished
238XDAHX-*3 (1)	250	Opp	120				Furnished	236XDAHX-*3 (1)	250	Opp	115				Furnished
238XKAHX-*3 (1)	215	Opp	154				Furnished	236XKAHX-*3 (1)	224	Opp	147				Furnished
238XQAHX-*3 (1)	160	Opp	207				Furnished	236XQAHX-*3 (1)	166	Opp	198				Furnished
238XUAHX-*3 (1)	139	Opp	237				Furnished	236XUAHX-*3 (1)	145	Opp	227				Furnished
885XBAHX-*3 (3)	423	Opp	78				Furnished								
885XGAHX-*3 (9)	329	Opp	100				Furnished								
885XJAHX-*3 (5)	279	Opp	118				Furnished								
885XMAHX-*3 (6)	238	Opp	139				Furnished								

Continued Next Page

CAUTION: Eaton Transmission Division has established a Maximum Torque Limit for the Transmission PTO Driver Gear. For all RT/RTO/RTLO transmissions the torque limit is 350 Ft-lbs [475 N.m] unless the transmission has been upgraded to a roller type input shaft bearing, Eaton part number 4301417, then 750 Ft-lbs [1017 N.m] torque becomes the Maximum limit. All torque limits on this application page reflect the 350 Ft-lbs [475 N.m] limit at the Transmission PTO Drive Gear. Refer to the Chelsea PTO Torque Limit Chart in the front of this section for complete torque limit information.

CAUTION: Do Not Use Geared Adapters with 442 "A" and "C" ratios.

CAUTION: 660/680 Series: Applications above 1500 RPM output shaft speed, contact Chelsea Technical Service for approval. DO NOT use Standard Geared Adapters w/660 Series, contact Chelsea Technical Service.

NOTE: The AK & XK output flanges can not be used with the "A" & "C" ratios on the 489 Series PTOs due to mounting stud interference. Use a RA or RB rotatable flange for the XK and the RA for the AK flange.

NOTE: The 442XBAH must use one of the geared adapters listed on the application page. The direction of rotation shown is the final output shaft rotation w/ geared adapter.

(1) Input Gear Part No. 5-P-1004
(3) Input Gear Part No. 5-P-1100
(5) Input Gear Part No. 5-P-1102
(6) Input Gear Part No. 5-P-1103
(7) Input Gear Part No. 5-P-1104
(8) Input Gear Part No. 5-P-1105
(9) Input Gear Part No. 5-P-1135
(16) Input Gear Part No. 5-P-1385
(20) Input Gear Part No. 5-P-1486

Parker Hannifin Corporation
Chelsea Products Division
Olive Branch, MS 38654 USA

RTAO-10710B-AC	RTAO-16710B-AS	RTO-14710B-AS2
RTAO-10710B-AS	RTO-10710B-AS2	RTO-14908LL
RTAO-12710B-AC	RTO-10910B-AS2	RTO-14910B-AS2
RTAO-12710B-AS	RTO-10910B-AS3	RTO-14910B-AS3
RTAO-14710B-AC	RTO-11908LL	RTO-16710B
RTAO-14710B-AC	RTO-12710B-AS2	RTO-16710B-AS2
RTAO-14710B-AS	RTO-12910B-AS2 (Thrushaft option use AT mounting)	RTO-16908LL (Thrushaft use BD mounting)
RTAO-16710B-AC	RTO-12910B-AS3 (Thrushaft option use AT mounting)	RTO-16910B-AS2

BOTTOM SIDE ONLY

TRANSMISSION GEAR DATA:
BOT 08-BOLT Opening Gear FORWARD of Centerline
47 Teeth - SPUR

PITCH LINE TO APERTURE FACE:
0.8050" (20.4500MM)

RIGHT SIDE ONLY

TRANSMISSION GEAR DATA:
R.S. 06-BOLT Opening Gear FORWARD of Centerline
45 Teeth - SPUR

PITCH LINE TO APERTURE FACE:
1.0850" (27.5600MM)

Caution: Application Approval Required for PTO Output Shaft Speeds Above 2500 RPM

BOTTOM Side PTO Model	Inter. Torq.	Dir. Rot.	Engine % Fwd.	Engine % Rev.	Filler Block	Adapter Assy.	Stud Kit	RIGHT Side PTO Model	Inter. Torq.	Dir. Rot.	Engine % Fwd.	Engine % Rev.	Filler Block	Adapter Assy.	Stud Kit
ONE SPEED - FORWARD & REVERSE															
348XFAHX-*5 (25)	200	Opp	100	105			Furnished	340XFAHX-*5 (25)	200	Opp	96	101	7-A-140(29)		Furnished
352ZSAHX-*3 (1)	140	Opp	223	288		328564X	Furnished	352XSAHX-*3 (1)	140	Opp	213	276			Furnished
863XBAHX-*5	423	Opp	78	97			Furnished								
GEARED ADAPTERS															
628XAHX-3AH	250	Eng	0		8-A-032		Furnished	626XAHX-3AH	250	Eng	0				Furnished
								630XAHX-3AH	250	Eng	0				Furnished
								645XAHX-3AH	250	Eng	0				Furnished

Continued Next Page

CAUTION: Eaton Transmission Division has established a Maximum Torque Limit for the Transmission PTO Driver Gear. For all RT/RTO/RTLO transmissions the torque limit is 350 Ft-lbs [475 N.m] unless the transmission has been upgraded to a roller type input shaft bearing, Eaton part number 4301417, then 750 Ft-lbs [1017 N.m] torque becomes the Maximum limit. All torque limits on this application page reflect the 350 Ft-lbs [475 N.m] limit at the Transmission PTO Drive Gear. Refer to the Chelsea PTO Torque Limit Chart in the front of this section for complete torque limit information.

CAUTION: Do Not Use Geared Adapters with 442 "A" and "C" ratios.

CAUTION: 660/680 Series: Applications above 1500 RPM output shaft speed, contact Chelsea Technical Service for approval. DO NOT use Standard Geared Adapters w/660 Series, contact Chelsea Technical Service.

NOTE: The AK & XK output flanges can not be used with the "A" & "C" ratios on the 489 Series PTOs due to mounting stud interference. Use a RA or RB rotatable flange for the XK and the RA for the AK flange.

NOTE: The 442XBAH must use one of the geared adapters listed on the application page. The direction of rotation shown is the final output shaft rotation w/ geared adapter.

(1) Input Gear Part No. 5-P-1004
(25) Input Gear Part No. 5-P-581
(29) Filler block furnished with P.T.O.

Parker Hannifin Corporation
Chelsea Products Division
Olive Branch, MS 38654 USA

RTAO-10710B-AC	RTAO-16710B-AS	RTO-14710B-AS2
RTAO-10710B-AS	RTO-10710B-AS2	RTO-14908LL
RTAO-12710B-AC	RTO-10910B-AS2	RTO-14910B-AS2
RTAO-12710B-AS	RTO-10910B-AS3	RTO-14910B-AS3
RTAO-14710B-AC	RTO-11908LL	RTO-16710B
RTAO-14710B-AC	RTO-12710B-AS2	RTO-16710B-AS2
RTAO-14710B-AS	RTO-12910B-AS2 (Thrushaft option use AT mounting)	RTO-16908LL (Thrushaft use BD mounting)
RTAO-16710B-AC	RTO-12910B-AS3 (Thrushaft option use AT mounting)	RTO-16910B-AS2

REAR SIDE ONLY

TRANSMISSION GEAR DATA:
REAR 00-BOLT Opening

PITCH LINE TO APERTURE FACE:

Caution: Application Approval Required for PTO Output Shaft Speeds Above 2500 RPM

REAR Side PTO Model	Inter. Torq.	Dir. Rot.	Engine %		Filler Block	Adapter Assy.	Stud Kit		Inter. Torq.	Dir. Rot.	Engine %		Filler Block	Adapter Assy.	Stud Kit
			Fwd.	Rev.							Fwd.	Rev.			
REAR MOUNT - "AT" MOUNTING OPTION															
541-LAT-*-*	400	Eng	91				Furnished								
541-MAT-*-*	350	Eng	117				Furnished								
541-NAT-*-*	300	Eng	133				Furnished								
REAR MOUNT - "AU" MOUNTING OPTION															
541-LAU-*-*	400	Eng	91				Furnished								
541-MAU-*-*	350	Eng	117				Furnished								
541-NAU-*-*	300	Eng	133				Furnished								
REAR MOUNT - "BD" MOUNTING OPTION															
541-LBD-*-*	400	Eng	91				Furnished								
541-MBD-*-*	350	Eng	117				Furnished								
541-NBD-*-*	300	Eng	133				Furnished								

CAUTION: Eaton Transmission Division has established a Maximum Torque Limit for the Transmission PTO Driver Gear. For all RT/RTO/RTLO transmissions the torque limit is 350 Ft-lbs [475 N.m] unless the transmission has been upgraded to a roller type input shaft bearing, Eaton part number 4301417, then 750 Ft-lbs [1017 N.m] torque becomes the Maximum limit. All torque limits on this application page reflect the 350 Ft-lbs [475 N.m] limit at the Transmission PTO Drive Gear. Refer to the Chelsea PTO Torque Limit Chart in the front of this section for complete torque limit information.

CAUTION: Do Not Use Geared Adapters with 442 "A" and "C" ratios.

CAUTION: 660/680 Series: Applications above 1500 RPM output shaft speed, contact Chelsea Technical Service for approval. DO NOT use Standard Geared Adapters w/660 Series, contact Chelsea Technical Service.

NOTE: The AK & XK output flanges can not be used with the "A" & "C" ratios on the 489 Series PTOs due to mounting stud interference. Use a RA or RB rotatable flange for the XK and the RA for the AK flange.

NOTE: The 442XBAH must use one of the geared adapters listed on the application page. The direction of rotation shown is the final output shaft rotation w/ geared adapter.

Parker Hannifin Corporation
Chelsea Products Division
Olive Branch, MS 38654 USA

FOM-16D313E-LEP	RTLC-16609E (Convertible 9 to 13 Speed)	RTLO-14918A-AS3
RTAO-10710C-AC	RTLO-12713A	RTLO-14918B
RTAO-10710C-AS	RTLO-13118-AMT	RTLO-14918B-AS
RTAO-12710C-AC	RTLO-14713A	RTLO-16713A
RTAO-12710C-AS	RTLO-14713A-T2	RTLO-16713A-T2
RTAO-14710C-AC	RTLO-14718B	RTLO-16718B
RTAO-14710C-AS	RTLO-14718B-T2	RTLO-16718B-T2
RTAO-16710C-AS	RTLO-14918A-AS2	RTLO-16913L-LHP

BOTTOM SIDE ONLY

TRANSMISSION GEAR DATA:
BOT 08-BOLT Opening Gear FORWARD of Centerline
47 Teeth - SPUR

PITCH LINE TO APERTURE FACE:
0.8050" (20.4500MM)

RIGHT SIDE ONLY

TRANSMISSION GEAR DATA:
R.S. 06-BOLT Opening Gear FORWARD of Centerline
45 Teeth - SPUR

PITCH LINE TO APERTURE FACE:
1.0850" (27.5600MM)

Caution: Application Approval Required for PTO Output Shaft Speeds Above 2500 RPM

BOTTOM Side PTO Model	Inter. Torq.	Dir. Rot.	Engine % Fwd.	Engine % Rev.	Filler Block	Adapter Assy.	Stud Kit	RIGHT Side PTO Model	Inter. Torq.	Dir. Rot.	Engine % Fwd.	Engine % Rev.	Filler Block	Adapter Assy.	Stud Kit
ONE SPEED - TWO GEAR - MECHANICAL SHIFT															
489XAAHX-*5 (12)	250	Opp	61			Furnished		221XCAHX-*3	250	Eng	66		7-A-032(P)(29)	329138X	Furnished
489XCAHX-*5 (13)	250	Opp	78			Furnished		221XEAHX-*3	250	Eng	76			329138X	Furnished
489XFAHX-*5 (2)	250	Opp	96			Furnished		221XLAHX-*3	200	Eng	102			329138X	Furnished
489XHAHX-*5 (15)	250	Opp	111			Furnished		221XPAHX-*3	200	Eng	124			329138X	Furnished
489XLAHX-*5 (1)	222	Opp	124			Furnished		442XAAHX-*3 (12)	250	Opp	58				Furnished
489XQAHX-*5 (1)	206	Opp	134			Furnished		442XBAHX-*3 (18)	250	Eng	58			REQUIRED	Furnished
489XRAHX-*5 (1)	178	Opp	155			Furnished		442XCAHX-*3 (13)	250	Opp	74				Furnished
489XSAHX-*5 (1)	150	Opp	184			Furnished		442XFAHX-*3 (2)	250	Opp	92				Furnished
680XFAHX-*3 (10)	288	Opp	96			Furnished		442XHAHX-*3 (15)	250	Opp	107				Furnished
680XHAHX-*3 (21)	249	Opp	111			Furnished		442XLAHX-*3 (1)	233	Opp	119				Furnished
680XQAHX-*3 (11)	206	Opp	134			Furnished		442XQAHX-*3 (1)	216	Opp	128				Furnished
680XRAHX-*3 (19)	178	Opp	155			Furnished		442XRAHX-*3 (1)	187	Opp	148				Furnished
680XSAHX-*3 (14)	150	Opp	184			Furnished		660XFAHX-*3 (10)	301	Opp	92				Furnished
823XBAHX-*3 (23)	423	Opp	65			Furnished		660XHAHX-*3 (21)	260	Opp	107				Furnished
823XDAHX-*3 (27)	357	Opp	77			Furnished		660XQAHX-*3 (11)	216	Opp	128				Furnished
823XGAHX-*3 (28)	329	Opp	84			Furnished		660XRAHX-*3 (19)	187	Opp	148				Furnished
823XJAHX-*3 (24)	279	Opp	99			Furnished									
823XMAHX-*3 (22)	238	Opp	116			Furnished									
823XRAHX-*3 (26)	172	Opp	160			Furnished									
823XTKTX-*3 (17)	142	Opp	194		8-A-165(T)(29)	Furnished									
880XBAHX-*3 (3)	423	Opp	65			Furnished									
880XDAHX-*3 (4)	357	Opp	77			Furnished									
880XGAHX-*3 (8)	329	Opp	84			Furnished									
880XJAHX-*3 (5)	279	Opp	99			Furnished									
880XMAHX-*3 (6)	238	Opp	116			Furnished									
880XQAHX-*3 (16)	203	Opp	136			Furnished									
880XRAHX-*3 (7)	172	Opp	160			Furnished									
ONE SPEED - TWO GEAR POWERSHIFT (AIR OR HYDRAULIC)															
282XBAJX-*3	300	Opp	65			Furnished		272XAAJX-*3	300	Opp	51				Furnished
282XCAJX-*3	300	Opp	79			Furnished		272XBAJX-*3	300	Opp	62				Furnished
282XDAJX-*3	293	Opp	93			Furnished		272XCAJX-*3	300	Opp	76				Furnished

Continued Next Page

CAUTION: Eaton Transmission Division has established a Maximum Torque Limit for the Transmission PTO Driver Gear. For all RT/RTO/RTLO transmissions the torque limit is 350 Ft-lbs [475 N.m] unless the transmission has been upgraded to a roller type input shaft bearing, Eaton part number 4301417, then 750 Ft-lbs [1017 N.m] torque becomes the Maximum limit. All torque limits on this application page reflect the 350 Ft-lbs [475 N.m] limit at the Transmission PTO Drive Gear. Refer to the Chelsea PTO Torque Limit Chart in the front of this section for complete torque limit information.

CAUTION: Do not use geared adapters with 442 "A" and "C" ratios.

CAUTION: 660/680 Series: Applications above 1500 RPM output shaft speed, contact Chelsea Technical Service for approval. DO NOT use Standard Geared Adapters w/660 Series, contact Chelsea Technical Service.

NOTE: The 880 Series "T" ratio will interfere with the adjacent gear in the transmission on the bottom opening.

NOTE: The 489 Series ratios "U","W",&"X" will interfere with the adjacent gear in the transmission on the bottom opening. The 442 Series ratios "S","U","W" and "X" will interfere with the adjacent gear in the transmission on the right opening.

NOTE: The AK & XK output flanges can not be used with the "A" & "C" ratios on the 489 Series PTOs due to mounting stud interference. Use a RA or RB rotatable flange for the XK and the RA for the AK flange.

NOTE: The 442XBAH Must Use One of the Geared Adapters Listed on the Application Page. Direction of Rotation Shown is the Final Output Shaft Rotation w/ Geared Adapter.

(1) Input Gear Part No. 5-P-1004
(2) Input Gear Part No. 5-P-1077
(3) Input Gear Part No. 5-P-1100
(4) Input Gear Part No. 5-P-1101
(5) Input Gear Part No. 5-P-1102
(6) Input Gear Part No. 5-P-1103
(7) Input Gear Part No. 5-P-1104
(8) Input Gear Part No. 5-P-1135
(10) Input Gear Part No. 5-P-1242
(11) Input Gear Part No. 5-P-1246
(12) Input Gear Part No. 5-P-1280
(13) Input Gear Part No. 5-P-1287
(14) Input Gear Part No. 5-P-1322
(15) Input Gear Part No. 5-P-1364
(16) Input Gear Part No. 5-P-1385
(17) Input Gear Part No. 5-P-1395
(18) Input Gear Part No. 5-P-1418
(19) Input Gear Part No. 5-P-1441
(21) Input Gear Part No. 5-P-1494
(22) Input Gear Part No. 5-P-283
(23) Input Gear Part No. 5-P-285
(24) Input Gear Part No. 5-P-325
(26) Input Gear Part No. 5-P-721
(27) Input Gear Part No. 5-P-971
(28) Input Gear Part No. 5-P-980
(29) Filler block furnished with P.T.O.

Parker Hannifin Corporation
Chelsea Products Division
Olive Branch, MS 38654 USA

FOM-16D313E-LEP	RTLC-16609E (Convertible 9 to 13 Speed)	RTLO-14918A-AS3
RTAO-10710C-AC	RTLO-12713A	RTLO-14918B
RTAO-10710C-AS	RTLO-13118-AMT	RTLO-14918B-AS
RTAO-12710C-AC	RTLO-14713A	RTLO-16713A
RTAO-12710C-AS	RTLO-14713A-T2	RTLO-16713A-T2
RTAO-14710C-AC	RTLO-14718B	RTLO-16718B
RTAO-14710C-AS	RTLO-14718B-T2	RTLO-16718B-T2
RTAO-16710C-AS	RTLO-14918A-AS2	RTLO-16913L-LHP

BOTTOM SIDE ONLY

TRANSMISSION GEAR DATA:
BOT 08-BOLT Opening Gear FORWARD of Centerline
47 Teeth - SPUR

PITCH LINE TO APERTURE FACE:
0.8050" (20.4500MM)

RIGHT SIDE ONLY

TRANSMISSION GEAR DATA:
R.S. 06-BOLT Opening Gear FORWARD of Centerline
45 Teeth - SPUR

PITCH LINE TO APERTURE FACE:
1.0850" (27.5600MM)

Caution: Application Approval Required for PTO Output Shaft Speeds Above 2500 RPM

BOTTOM Side PTO Model	Inter. Torq.	Dir. Rot.	Engine % Fwd.	Engine % Rev.	Filler Block	Adapter Assy.	Stud Kit	RIGHT Side PTO Model	Inter. Torq.	Dir. Rot.	Engine % Fwd.	Engine % Rev.	Filler Block	Adapter Assy.	Stud Kit
ONE SPEED - TWO GEAR POWERSHIFT (AIR OR HYDRAULIC)															
282XGAJX-*3	246	Opp	112				Furnished	272XDAJX-*3	300	Opp	90				Furnished
282XKAJX-*3	220	Opp	125				Furnished	272XGAJX-*3	257	Opp	107				Furnished
282XMAJX-*3	197	Opp	140				Furnished	272XKAJX-*3	230	Opp	120				Furnished
282XPAJX-*3	176	Opp	156				Furnished	272XMAJX-*3	206	Opp	134				Furnished
282XSAJX-*3	158	Opp	174				Furnished	272XPAJX-*3	184	Opp	150				Furnished
282XTAJX-*3	141	Opp	195				Furnished	272XSAJX-*3	165	Opp	168				Furnished
ONE SPEED - TWO GEAR - POWERSHIFT (AIR)															
230XAAJX-*3	250	Opp	50			328481X	Furnished	230XAAJX-*3	250	Opp	48				Furnished
230XBAJX-*3	250	Opp	66			328481X	Furnished	230XBAJX-*3	250	Opp	63				Furnished
230XDAJX-*3	250	Opp	76			328481X	Furnished	230XDAJX-*3	250	Opp	73				Furnished
230XKAJX-*3	250	Opp	103			328481X	Furnished	230XKAJX-*3	250	Opp	98				Furnished
230XQAJX-*3	203	Opp	136			328481X	Furnished	230XQAJX-*3	212	Opp	131				Furnished
230XUAJX-*3 (9)	126	Opp	218			328481X	Furnished	230XUAJX-*3 (9)	132	Opp	210				Furnished
238XAAHX-*3 (20)	250	Opp	67				Furnished	236XAAHX-*3 (20)	250	Opp	64				Furnished
238XDAHX-*3 (1)	250	Opp	100				Furnished	236XDAHX-*3 (1)	250	Opp	96				Furnished
238XKAHX-*3 (1)	215	Opp	129				Furnished	236XKAHX-*3 (1)	224	Opp	123				Furnished
885XBAHX-*3 (3)	423	Opp	65				Furnished								
885XGAHX-*3 (8)	329	Opp	84				Furnished								
885XJAHX-*3 (5)	279	Opp	99				Furnished								
885XMAHX-*3 (6)	238	Opp	116				Furnished								
ONE SPEED - FORWARD & REVERSE															
348XFAHX-*5 (25)	200	Opp	84	88			Furnished	352XSAHX-*3 (1)	140	Opp	179	231			Furnished
352ZSAHX-*3 (1)	140	Opp	187	241		328564X	Furnished								
863XBAHX-*5	423	Opp	65	81			Furnished								
GEARED ADAPTERS															
628XAHX-3AH	250	Eng	0		8-A-032		Furnished	626XAHX-3AH	250	Eng	0				Furnished
								630XAHX-3AH	250	Eng	0				Furnished
								645XAHX-3AH	250	Eng	0				Furnished

Continued Next Page

CAUTION: Eaton Transmission Division has established a Maximum Torque Limit for the Transmission PTO Driver Gear. For all RT/RTO/RTLO transmissions the torque limit is 350 Ft-lbs [475 N.m] unless the transmission has been upgraded to a roller type input shaft bearing, Eaton part number 4301417, then 750 Ft-lbs [1017 N.m] torque becomes the Maximum limit. All torque limits on this application page reflect the 350 Ft-lbs [475 N.m] limit at the Transmission PTO Drive Gear. Refer to the Chelsea PTO Torque Limit Chart in the front of this section for complete torque limit information.

CAUTION: Do not use geared adapters with 442 "A" and "C" ratios.

CAUTION: 660/680 Series: Applications above 1500 RPM output shaft speed, contact Chelsea Technical Service for approval. DO NOT use Standard Geared Adapters w/660 Series, contact Chelsea Technical Service.

NOTE: The 880 Series "T" ratio will interfere with the adjacent gear in the transmission on the bottom opening.

NOTE: The 489 Series ratios "U","W",&"X" will interfere with the adjacent gear in the transmission on the bottom opening. The 442 Series ratios "S","U","W" and "X" will interfere with the adjacent gear in the transmission on the right opening.

NOTE: The AK & XK output flanges can not be used with the "A" & "C" ratios on the 489 Series PTOs due to mounting stud interference. Use a RA or RB rotatable flange for the XK and the RA for the AK flange.

NOTE: The 442XBAH Must Use One of the Geared Adapters Listed on the Application Page. Direction of Rotation Shown is the Final Output Shaft Rotation w/ Geared Adapter.

(1) Input Gear Part No. 5-P-1004
(3) Input Gear Part No. 5-P-1100
(5) Input Gear Part No. 5-P-1102
(6) Input Gear Part No. 5-P-1103
(8) Input Gear Part No. 5-P-1135
(9) Input Gear Part No. 5-P-1144
(20) Input Gear Part No. 5-P-1486
(25) Input Gear Part No. 5-P-581

Parker Hannifin Corporation
Chelsea Products Division
Olive Branch, MS 38654 USA

FOM-16D313E-LEP	RTLC-16609E (Convertible 9 to 13 Speed)	RTLO-14918A-AS3
RTAO-10710C-AC	RTLO-12713A	RTLO-14918B
RTAO-10710C-AS	RTLO-13118-AMT	RTLO-14918B-AS
RTAO-12710C-AC	RTLO-14713A	RTLO-16713A
RTAO-12710C-AS	RTLO-14713A-T2	RTLO-16713A-T2
RTAO-14710C-AC	RTLO-14718B	RTLO-16718B
RTAO-14710C-AS	RTLO-14718B-T2	RTLO-16718B-T2
RTAO-16710C-AS	RTLO-14918A-AS2	RTLO-16913L-LHP

REAR SIDE ONLY

TRANSMISSION GEAR DATA:
REAR 03-BOLT Opening

PITCH LINE TO APERTURE FACE:

Caution: Application Approval Required for PTO Output Shaft Speeds Above 2500 RPM

REAR Side PTO Model	Inter. Torq.	Dir. Rot.	Engine % Fwd.	Engine % Rev.	Filler Block	Adapter Assy.	Stud Kit		Inter. Torq.	Dir. Rot.	Engine % Fwd.	Engine % Rev.	Filler Block	Adapter Assy.	Stud Kit
REAR MOUNT - "AT" MOUNTING OPTION															
541-LAT-*-*	400	Eng	76				Furnished								
541-MAT-*-*	350	Eng	98				Furnished								
541-NAT-*-*	300	Eng	112				Furnished								
REAR MOUNT - "AU" MOUNTING OPTION															
541-LAU-*-*	400	Eng	76				Furnished								
541-MAU-*-*	350	Eng	98				Furnished								
541-NAU-*-*	300	Eng	112				Furnished								
REAR MOUNT - "BD" MOUNTING OPTION															
541-LBD-*-*	400	Eng	76				Furnished								
541-MBD-*-*	350	Eng	98				Furnished								
541-NBD-*-*	300	Eng	112				Furnished								

CAUTION: Eaton Transmission Division has established a Maximum Torque Limit for the Transmission PTO Driver Gear. For all RT/RTO/RTLO transmissions the torque limit is 350 Ft-lbs [475 N.m] unless the transmission has been upgraded to a roller type input shaft bearing, Eaton part number 4301417, then 750 Ft-lbs [1017 N.m] torque becomes the Maximum limit. All torque limits on this application page reflect the 350 Ft-lbs [475 N.m] limit at the Transmission PTO Drive Gear. Refer to the Chelsea PTO Torque Limit Chart in the front of this section for complete torque limit information.

CAUTION: Do not use geared adapters with 442 "A" and "C" ratios.

CAUTION: 660/680 Series: Applications above 1500 RPM output shaft speed, contact Chelsea Technical Service for approval. DO NOT use Standard Geared Adapters w/660 Series, contact Chelsea Technical Service.

NOTE: The 880 Series "T" ratio will interfere with the adjacent gear in the transmission on the bottom opening.

NOTE: The 489 Series ratios "U","W",&"X" will interfere with the adjacent gear in the transmission on the bottom opening. The 442 Series ratios "S","U","W" and "X" will interfere with the adjacent gear in the transmission on the right opening.

NOTE: The AK & XK output flanges can not be used with the "A" & "C" ratios on the 489 Series PTOs due to mounting stud interference. Use a RA or RB rotatable flange for the XK and the RA for the AK flange.

NOTE: The 442XBAH Must Use One of the Geared Adapters Listed on the Application Page. Direction of Rotation Shown is the Final Output Shaft Rotation w/ Geared Adapter.

Eaton Fuller

Parker Hannifin Corporation
Chelsea Products Division
Olive Branch, MS 38654 USA

RTO-14915
RTO-16915
RTX-14715
RTX-15715

BOTTOM SIDE ONLY

TRANSMISSION GEAR DATA:
BOT 08-BOLT Opening Gear FORWARD of Centerline
47 Teeth - SPUR

PITCH LINE TO APERTURE FACE:
0.8050" (20.5700MM)

RIGHT SIDE ONLY

TRANSMISSION GEAR DATA:
R.S. 06-BOLT Opening Gear FORWARD of Centerline
45 Teeth - SPUR

PITCH LINE TO APERTURE FACE:
1.0850" (27.5600MM)

Caution: Application Approval Required for PTO Output Shaft Speeds Above 2500 RPM

ONE SPEED - TWO GEAR - MECHANICAL SHIFT

BOTTOM Side PTO Model	Inter. Torq.	Dir. Rot.	Engine % Fwd.	Engine % Rev.	Filler Block	Adapter Assy.	Stud Kit	RIGHT Side PTO Model	Inter. Torq.	Dir. Rot.	Engine % Fwd.	Engine % Rev.	Filler Block	Adapter Assy.	Stud Kit
221ZCAHX-*3	250	Opp	77		7-A-032(P)(28)	328564X	Furnished	221XCAHX-*3	250	Opp	74		7-A-032(28)		Furnished
221ZEAHX-*3	250	Opp	89			328564X	Furnished	221XEAHX-*3	250	Opp	86				Furnished
221ZLAHX-*3	200	Opp	120			328564X	Furnished	221XLAHX-*3	200	Opp	115				Furnished
221ZPAHX-*3	200	Opp	145			328564X	Furnished	221XPAHX-*3	200	Opp	139				Furnished
489XAAHX-*5 (12)	250	Opp	68				Furnished	442XAAHX-*3 (12)	250	Opp	65				Furnished
489XCAHX-*5 (13)	250	Opp	87				Furnished	442XBAHX-*3 (18)	250	Eng	65			REQUIRED	Furnished
489XFAHX-*5 (2)	250	Opp	108				Furnished	442XCAHX-*3 (13)	250	Opp	83				Furnished
489XHAHX-*5 (15)	250	Opp	125				Furnished	442XFAHX-*3 (2)	250	Opp	103				Furnished
489XLAHX-*5 (1)	222	Opp	139				Furnished	442XHAHX-*3 (15)	250	Opp	119				Furnished
489XQAHX-*5 (1)	206	Opp	150				Furnished	442XLAHX-*3 (1)	233	Opp	134				Furnished
489XRAHX-*5 (1)	178	Opp	174				Furnished	442XQAHX-*3 (1)	216	Opp	144				Furnished
489XSAHX-*5 (1)	150	Opp	207				Furnished	442XRAHX-*3 (1)	187	Opp	166				Furnished
489XUAHX-*5 (1)	126	Opp	247				Furnished	442XSAHX-*3 (1)	156	Opp	198				Furnished
489XWAHX-*5 (1)	107	Opp	290				Furnished	442XUAHX-*3 (1)	132	Opp	236				Furnished
489XXAHX-*5 (1)	91	Opp	343				Furnished	442XWAHX-*3 (1)	112	Opp	278				Furnished
680XFAHX-*3 (10)	288	Opp	108				Furnished	442XXAHX-*3 (1)	94	Opp	329				Furnished
680XHAHX-*3 (20)	249	Opp	125				Furnished	660XFAHX-*3 (10)	301	Opp	103				Furnished
680XQAHX-*3 (11)	206	Opp	150				Furnished	660XHAHX-*3 (15)	260	Opp	119				Furnished
680XRAHX-*3 (19)	178	Opp	174				Furnished	660XQAHX-*3 (11)	216	Opp	144				Furnished
680XSAHX-*3 (14)	150	Opp	207				Furnished	660XRAHX-*3 (19)	187	Opp	166				Furnished
823XBAHX-*3 (22)	423	Opp	73				Furnished	660XSAHX-*3 (14)	156	Opp	198				Furnished
823XDAHX-*3 (26)	357	Opp	87				Furnished								
823XGAHX-*3 (27)	329	Opp	87				Furnished								
823XJAHX-*3 (23)	279	Opp	111				Furnished								
823XMAHX-*3 (21)	238	Opp	130				Furnished								
823XRAHX-*3 (25)	172	Opp	180				Furnished								
823XTKTX-*3 (17)	142	Opp	218		8-A-165(28)		Furnished								
880XBAHX-*3 (3)	423	Opp	73				Furnished								
880XDAHX-*3 (4)	357	Opp	87				Furnished								
880XGAHX-*3 (9)	329	Opp	94				Furnished								
880XJAHX-*3 (5)	279	Opp	111				Furnished								
880XMAHX-*3 (6)	238	Opp	130				Furnished								

Continued Next Page

CAUTION: Eaton Transmission Division has established a Maximum Torque Limit for the Transmission PTO Driver Gear. For all RT/RTO/RTLO transmissions the torque limit is 350 Ft-lbs [475 N.m] unless the transmission has been upgraded to a roller type input shaft bearing, Eaton part number 4301417, then 750 Ft-lbs [1017 N.m] torque becomes the Maximum limit. All torque limits on this application page reflect the 350 Ft-lbs [475 N.m] limit at the Transmission PTO Drive Gear. Refer to the Chelsea PTO Torque Limit Chart in the front of this section for complete torque limit information.

CAUTION: 660/680 Series: Applications above 1500 RPM output shaft speed, contact Chelsea Technical Service for approval. DO NOT use Standard Geared Adapters w/660 Series, contact Chelsea Technical Service.

NOTE: The AK & XK output flanges can not be used with the "A" & "C" ratios on the 489 Series PTOs due to mounting stud interference. Use a RA or RB rotatable flange for the XK and the RA for the AK flange.

NOTE: The 442XBAH must use one of the geared adapters listed on the application page. The direction of rotation shown is the final output shaft rotation w/ geared adapter.

(1) Input Gear Part No. 5-P-1004
(2) Input Gear Part No. 5-P-1077
(3) Input Gear Part No. 5-P-1100
(4) Input Gear Part No. 5-P-1101
(5) Input Gear Part No. 5-P-1102
(6) Input Gear Part No. 5-P-1103
(9) Input Gear Part No. 5-P-1135
(10) Input Gear Part No. 5-P-1242
(11) Input Gear Part No. 5-P-1246
(12) Input Gear Part No. 5-P-1280
(13) Input Gear Part No. 5-P-1287
(14) Input Gear Part No. 5-P-1322
(15) Input Gear Part No. 5-P-1364
(17) Input Gear Part No. 5-P-1395
(18) Input Gear Part No. 5-P-1418
(19) Input Gear Part No. 5-P-1441
(20) Input Gear Part No. 5-P-1494
(21) Input Gear Part No. 5-P-283
(22) Input Gear Part No. 5-P-285
(23) Input Gear Part No. 5-P-325
(25) Input Gear Part No. 5-P-721
(26) Input Gear Part No. 5-P-971
(27) Input Gear Part No. 5-P-980
(28) Filler block furnished with P.T.O.

RTO-14915
RTO-16915
RTX-14715
RTX-15715

BOTTOM SIDE ONLY

TRANSMISSION GEAR DATA:
BOT 08-BOLT Opening Gear FORWARD of Centerline
47 Teeth - SPUR

PITCH LINE TO APERTURE FACE:
0.8050" (20.5700MM)

RIGHT SIDE ONLY

TRANSMISSION GEAR DATA:
R.S. 06-BOLT Opening Gear FORWARD of Centerline
45 Teeth - SPUR

PITCH LINE TO APERTURE FACE:
1.0850" (27.5600MM)

Caution: Application Approval Required for PTO Output Shaft Speeds Above 2500 RPM

BOTTOM Side PTO Model	Inter. Torq.	Dir. Rot.	Engine % Fwd.	Engine % Rev.	Filler Block	Adapter Assy.	Stud Kit	RIGHT Side PTO Model	Inter. Torq.	Dir. Rot.	Engine % Fwd.	Engine % Rev.	Filler Block	Adapter Assy.	Stud Kit
ONE SPEED - TWO GEAR - MECHANICAL SHIFT															
880XQAHX-*3 (16)	203	Opp	153				Furnished								
880XRAHX-*3 (7)	172	Opp	180				Furnished								
880XTAHX-*3 (8)	134	Opp	232				Furnished								
ONE SPEED - TWO GEAR POWERSHIFT (AIR OR HYDRAULIC)															
282XBAJX-*3	300	Opp	73				Furnished	272XAAJX-*3	300	Opp	57				Furnished
282XCAJX-*3	300	Opp	89				Furnished	272XBAJX-*3	300	Opp	70				Furnished
282XDAJX-*3	293	Opp	106				Furnished	272XCAJX-*3	300	Opp	85				Furnished
282XGAJX-*3	246	Opp	126				Furnished	272XDAJX-*3	300	Opp	101				Furnished
282XKAJX-*3	220	Opp	141				Furnished	272XGAJX-*3	257	Opp	121				Furnished
282XMAJX-*3	197	Opp	158				Furnished	272XKAJX-*3	230	Opp	135				Furnished
282XPAJX-*3	176	Opp	176				Furnished	272XMAJX-*3	206	Opp	151				Furnished
282XSAJX-*3	158	Opp	197				Furnished	272XPAJX-*3	184	Opp	169				Furnished
282XTAJX-*3	141	Opp	221				Furnished	272XSAJX-*3	165	Opp	189				Furnished
ONE SPEED - TWO GEAR - POWERSHIFT (AIR)															
885XBAHX-*3 (3)	423	Opp	73				Furnished								
885XGAHX-*3 (9)	329	Opp	94				Furnished								
885XJAHX-*3 (5)	279	Opp	111				Furnished								
885XMAHX-*3 (6)	238	Opp	130				Furnished								
ONE SPEED - FORWARD & REVERSE															
348XFAHX-*5 (24)	200	Opp	94	99			Furnished	340XFAHX-*5 (24)	200	Opp	90	95	7-A-140(28)		Furnished
352ZSAHX-*3 (1)	140	Opp	210	271		328564X	Furnished	352XSAHX-*3 (1)	140	Opp	201	260			Furnished
863XBAHX-*5	423	Opp	73	91			Furnished								
GEARED ADAPTERS															
628XAHX-3AH	250	Eng	0		8-A-032		Furnished	626XAHX-3AH	250	Eng	0				Furnished
								630XAHX-3AH	250	Eng	0				Furnished
								645XAHX-3AH	250	Eng	0				Furnished

Continued Next Page

CAUTION: Eaton Transmission Division has established a Maximum Torque Limit for the Transmission PTO Driver Gear. For all RT/RTO/RTLO transmissions the torque limit is 350 Ft-lbs [475 N.m] unless the transmission has been upgraded to a roller type input shaft bearing, Eaton part number 4301417, then 750 Ft-lbs [1017 N.m] torque becomes the Maximum limit. All torque limits on this application page reflect the 350 Ft-lbs [475 N.m] limit at the Transmission PTO Drive Gear. Refer to the Chelsea PTO Torque Limit Chart in the front of this section for complete torque limit information.

CAUTION: 660/680 Series: Applications above 1500 RPM output shaft speed, contact Chelsea Technical Service for approval. DO NOT use Standard Geared Adapters w/660 Series, contact Chelsea Technical Service.

NOTE: The AK & XK output flanges can not be used with the "A" & "C" ratios on the 489 Series PTOs due to mounting stud interference. Use a RA or RB rotatable flange for the XK and the RA for the AK flange.

NOTE: The 442XBAH must use one of the geared adapters listed on the application page. The direction of rotation shown is the final output shaft rotation w/ geared adapter.

(1) Input Gear Part No. 5-P-1004
(3) Input Gear Part No. 5-P-1100
(5) Input Gear Part No. 5-P-1102
(6) Input Gear Part No. 5-P-1103
(7) Input Gear Part No. 5-P-1104
(8) Input Gear Part No. 5-P-1105
(9) Input Gear Part No. 5-P-1135
(16) Input Gear Part No. 5-P-1385
(24) Input Gear Part No. 5-P-581
(28) Filler block furnished with P.T.O.

Parker Hannifin Corporation
Chelsea Products Division
Olive Branch, MS 38654 USA

RTO-14915
RTO-16915
RTX-14715
RTX-15715

REAR SIDE ONLY

TRANSMISSION GEAR DATA:
REAR 00-BOLT Opening

PITCH LINE TO APERTURE FACE:

Caution: Application Approval Required for PTO Output Shaft Speeds Above 2500 RPM

REAR Side PTO Model	Inter. Torq.	Dir. Rot.	Engine %		Filler Block	Adapter Assy.	Stud Kit		Inter. Torq.	Dir. Rot.	Engine %		Filler Block	Adapter Assy.	Stud Kit
			Fwd.	Rev.							Fwd.	Rev.			

REAR MOUNT - "BD" MOUNTING OPTION

541-LBD-*-*	400	Eng	86			Furnished
541-MBD-*-*	350	Eng	111			Furnished
541-NBD-*-*	300	Eng	126			Furnished

CAUTION: Eaton Transmission Division has established a Maximum Torque Limit for the Transmission PTO Driver Gear. For all RT/RTO/RTLO transmissions the torque limit is 350 Ft-lbs [475 N.m] unless the transmission has been upgraded to a roller type input shaft bearing, Eaton part number 4301417, then 750 Ft-lbs [1017 N.m] torque becomes the Maximum limit. All torque limits on this application page reflect the 350 Ft-lbs [475 N.m] limit at the Transmission PTO Drive Gear. Refer to the Chelsea PTO Torque Limit Chart in the front of this section for complete torque limit information.

CAUTION: 660/680 Series: Applications above 1500 RPM output shaft speed, contact Chelsea Technical Service for approval. DO NOT use Standard Geared Adapters w/660 Series, contact Chelsea Technical Service.

NOTE: The AK & XK output flanges can not be used with the "A" & "C" ratios on the 489 Series PTOs due to mounting stud interference. Use a RA or RB rotatable flange for the XK and the RA for the AK flange.

NOTE: The 442XBAH must use one of the geared adapters listed on the application page. The direction of rotation shown is the final output shaft rotation w/ geared adapter.

Parker Hannifin Corporation
Chelsea Products Division
Olive Branch, MS 38654 USA

AT-1202

BOTTOM SIDE ONLY

TRANSMISSION GEAR DATA:
BOT 06-BOLT Opening Gear FORWARD of Centerline
30 Teeth - SPUR

PITCH LINE TO APERTURE FACE:
1.0500" (26.6700MM)

TOP SIDE ONLY

TRANSMISSION GEAR DATA:
TOP 08-BOLT Opening Gear FORWARD of Centerline
30 Teeth - SPUR

PITCH LINE TO APERTURE FACE:
0.7750" (19.6900MM)

Caution: Application Approval Required for PTO Output Shaft Speeds Above 2500 RPM

BOTTOM Side PTO Model	Inter. Torq.	Dir. Rot.	Engine % Fwd.	Engine % Rev.	Filler Block	Adapter Assy.	Stud Kit	TOP Side PTO Model	Inter. Torq.	Dir. Rot.	Engine % Fwd.	Engine % Rev.	Filler Block	Adapter Assy.	Stud Kit
ONE SPEED - TWO GEAR - MECHANICAL SHIFT															
221XCABX-*3	250	Opp	64		7-A-032		Furnished	221ZCABX-*5	250	Opp	64		7-A-032(P)	328564X	Furnished
221XEABX-*3	250	Opp	71		7-A-032		Furnished	221ZEABX-*5	250	Opp	71		7-A-032(P)	328564X	Furnished
221XLABX-*3	200	Opp	96		7-A-032		Furnished	221ZLABX-*5	200	Opp	96		7-A-032(P)	328564X	Furnished
221XPABX-*3	200	Opp	116		7-A-032		Furnished	221ZPABX-*5	200	Opp	116		7-A-032(P)	328564X	Furnished
442XAABX-*3 (4)	250	Opp	53		7-A-032		Furnished	489XAABX-*5 (4)	250	Opp	53				Furnished
442XCABX-*3 (5)	250	Opp	68		7-A-032		Furnished	489XCABX-*5 (5)	250	Opp	68				Furnished
442XFABX-*3 (2)	250	Opp	84		7-A-032		Furnished	489XFABX-*5 (2)	250	Opp	84				Furnished
442XLABX-*3 (1)	250	Opp	108		7-A-032		Furnished	489XLABX-*5 (1)	250	Opp	108				Furnished
442XQABX-*3 (1)	225	Opp	117		7-A-032		Furnished	489XQABX-*5 (1)	225	Opp	117				Furnished
442XRABX-*3 (1)	225	Opp	135		7-A-032		Furnished	489XRABX-*5 (1)	225	Opp	135				Furnished
442XSABX-*3 (1)	200	Opp	161		7-A-032		Furnished	489XSABX-*5 (1)	200	Opp	161				Furnished
442XUABX-*3 (1)	195	Opp	192		7-A-032		Furnished	489XUABX-*5 (1)	195	Opp	192				Furnished
442XWABX-*3 (1)	175	Opp	225		7-A-032		Furnished	489XWABX-*5 (1)	175	Opp	225				Furnished
442XXABX-*3 (1)	140	Opp	267		7-A-032		Furnished	489XXABX-*5 (1)	140	Opp	267				Furnished
								880XBABX-*5 (3)	500	Opp	58				Furnished
ONE SPEED - TWO GEAR - POWERSHIFT (AIR)															
236XDABX-*3 (1)	250	Opp	88		7-A-032		Furnished	238XDABX-*5 (1)	250	Opp	88				Furnished
236XKABX-*3 (1)	250	Opp	112		7-A-032		Furnished	238XKABX-*5 (1)	250	Opp	112				Furnished
236XQABX-*3 (1)	250	Opp	151		7-A-032		Furnished	238XQABX-*5 (1)	250	Opp	151				Furnished
236XUABX-*3 (1)	225	Opp	174		7-A-032		Furnished	238XUABX-*5 (1)	225	Opp	174				Furnished
ONE SPEED - FORWARD & REVERSE															
352XSABX-*3 (1)	140	Opp	163	211	7-A-032		Furnished	340SFABX-*5 (6)	200	Opp	76	80	7-A-032(P)	310778X	Furnished
								348XFABX-*5 (6)	200	Opp	76	80	8-A-093		Furnished
								352ZSABX-*5 (1)	140	Opp	163	211	7-A-032(P)	328564X	Furnished
								863XBABX-*5	500	Opp	58	72			Furnished
GEARED ADAPTERS															
626XABX-3AB	250	Eng	0		7-A-032		Furnished	628XABX-3AB	250	Eng	0				Furnished
630XABX-3AB	250	Eng	0		7-A-032		Furnished								
645XABX-3AB	250	Eng	0		7-A-032		Furnished								

NOTE: The AK & XK output flanges can not be used with the "A" & "C" ratios on the 489 Series PTO due to mounting stud interference. Use a RA or RB rotatable flange for the XK and the RA for the AK flange.

(1) Input Gear Part No. 5-P-1001
(2) Input Gear Part No. 5-P-1076
(3) Input Gear Part No. 5-P-1099
(4) Input Gear Part No. 5-P-1279
(5) Input Gear Part No. 5-P-1286
(6) Input Gear Part No. 5-P-579

Parker Hannifin Corporation
Chelsea Products Division
Olive Branch, MS 38654 USA

RT-8608L

BOTTOM SIDE ONLY

TRANSMISSION GEAR DATA:
BOT 08-BOLT Opening Gear FORWARD of Centerline
47 Teeth - SPUR

PITCH LINE TO APERTURE FACE:
0.8050" (20.4500MM)

RIGHT SIDE ONLY

TRANSMISSION GEAR DATA:
R.S. 06-BOLT Opening Gear FORWARD of Centerline
45 Teeth - SPUR

PITCH LINE TO APERTURE FACE:
1.0850" (27.5600MM)

Caution: Application Approval Required for PTO Output Shaft Speeds Above 2500 RPM

BOTTOM Side PTO Model	Inter. Torq.	Dir. Rot.	Engine % Fwd.	Engine % Rev.	Filler Block	Adapter Assy.	Stud Kit	RIGHT Side PTO Model	Inter. Torq.	Dir. Rot.	Engine % Fwd.	Engine % Rev.	Filler Block	Adapter Assy.	Stud Kit
ONE SPEED - TWO GEAR - MECHANICAL SHIFT															
221ZCAHX-*3	250	Opp	50		7-A-032(P)(29)	328564X	Furnished	221XCAHX-*3	250	Opp	48		7-A-032(29)		Furnished
221ZEAHX-*3	250	Opp	58			328564X	Furnished	221XEAHX-*3	250	Opp	56				Furnished
221ZLAHX-*3	200	Opp	78			328564X	Furnished	221XLAHX-*3	200	Opp	75				Furnished
221ZPAHX-*3	200	Opp	94			328564X	Furnished	221XPAHX-*3	200	Opp	90				Furnished
489XAAHX-*5 (12)	250	Opp	44				Furnished	442XAAHX-*3 (12)	250	Opp	42				Furnished
489XCAHX-*5 (13)	250	Opp	57				Furnished	442XBAHX-*3 (18)	250	Eng	42			REQUIRED	Furnished
489XFAHX-*5 (2)	250	Opp	70				Furnished	442XCAHX-*3 (13)	250	Opp	54				Furnished
489XHAHX-*5 (15)	250	Opp	81				Furnished	442XFAHX-*3 (2)	250	Opp	67				Furnished
489XLAHX-*5 (1)	222	Opp	91				Furnished	442XHAHX-*3 (15)	250	Opp	78				Furnished
489XQAHX-*5 (1)	206	Opp	98				Furnished	442XLAHX-*3 (1)	233	Opp	87				Furnished
489XRAHX-*5 (1)	178	Opp	113				Furnished	442XQAHX-*3 (1)	216	Opp	94				Furnished
489XSAHX-*5 (1)	150	Opp	135				Furnished	442XRAHX-*3 (1)	187	Opp	108				Furnished
489XUAHX-*5 (1)	126	Opp	161				Furnished	442XSAHX-*3 (1)	156	Opp	129				Furnished
489XWAHX-*5 (1)	107	Opp	189				Furnished	442XUAHX-*3 (1)	132	Opp	154				Furnished
489XXAHX-*5 (1)	91	Opp	223				Furnished	442XWAHX-*3 (1)	112	Opp	181				Furnished
680XFAHX-*3 (10)	288	Opp	70				Furnished	442XXAHX-*3 (1)	94	Opp	214				Furnished
680XHAHX-*3 (21)	375	Opp	81				Furnished	660XFAHX-*3 (10)	301	Opp	67				Furnished
680XQAHX-*3 (11)	206	Opp	98				Furnished	660XHAHX-*3 (15)	260	Opp	78				Furnished
680XRAHX-*3 (19)	178	Opp	113				Furnished	660XQAHX-*3 (11)	216	Opp	94				Furnished
680XSAHX-*3 (14)	150	Opp	135				Furnished	660XRAHX-*3 (19)	187	Opp	108				Furnished
823XBAHX-*3 (23)	423	Opp	48				Furnished	660XSAHX-*3 (14)	156	Opp	129				Furnished
823XDAHX-*3 (28)	357	Opp	57				Furnished								
823XGAHX-*3 (26)	329	Opp	61				Furnished								
823XJAHX-*3 (24)	279	Opp	72				Furnished								
823XMAHX-*3 (22)	238	Opp	85				Furnished								
823XRAHX-*3 (27)	172	Opp	117				Furnished								
823XTKTX-*3 (17)	142	Opp	142		8-A-165(29)		Furnished								
880XBAHX-*3 (3)	423	Opp	48				Furnished								
880XDAHX-*3 (4)	357	Opp	57				Furnished								
880XGAHX-*3 (9)	329	Opp	61				Furnished								
880XJAHX-*3 (5)	279	Opp	72				Furnished								
880XMAHX-*3 (6)	238	Opp	85				Furnished								

Continued Next Page

CAUTION: Eaton Transmission Division has established a Maximum Torque Limit for the Transmission PTO Driver Gear. For all RT/RTO/RTLO transmissions the torque limit is 350 Ft-lbs [475 N.m] unless the transmission has been upgraded to a roller type input shaft bearing, Eaton part number 4301417, then 750 Ft-lbs [1017 N.m] torque becomes the Maximum limit. All torque limits on this application page reflect the 350 Ft-lbs [475 N.m] limit at the Transmission PTO Drive Gear.Refer to the Chelsea PTO Torque Limit Chart in the front of this section for complete torque limit information.

CAUTION: Do not use geared adapters with 442 "A" and "C" ratios.

CAUTION: 660/680 Series: Applications above 1500 RPM output shaft speed, contact Chelsea Technical Service for approval. DO NOT use Standard Geared Adapters w/660 Series, contact Chelsea Technical Service.

NOTE: The AK & XK output flanges can not be used with the "A" & "C" ratios on the 489 Series PTOs due to mounting stud interference. Use a RA or RB rotatable flange for the XK and the RA for the AK flange.

NOTE: The 442XBAH must use one of the geared adapters listed on the application page. The direction of rotation shown is the final output shaft rotation w/ geared adapter.

(1) Input Gear Part No. 5-P-1004
(2) Input Gear Part No. 5-P-1077
(3) Input Gear Part No. 5-P-1100
(4) Input Gear Part No. 5-P-1101
(5) Input Gear Part No. 5-P-1102
(6) Input Gear Part No. 5-P-1103
(9) Input Gear Part No. 5-P-1135
(10) Input Gear Part No. 5-P-1242
(11) Input Gear Part No. 5-P-1246
(12) Input Gear Part No. 5-P-1280
(13) Input Gear Part No. 5-P-1287
(14) Input Gear Part No. 5-P-1322
(15) Input Gear Part No. 5-P-1364
(17) Input Gear Part No. 5-P-1395
(18) Input Gear Part No. 5-P-1418
(19) Input Gear Part No. 5-P-1441
(21) Input Gear Part No. 5-P-1494
(22) Input Gear Part No. 5-P-283
(23) Input Gear Part No. 5-P-285
(24) Input Gear Part No. 5-P-325
(26) Input Gear Part No. 5-P-590
(27) Input Gear Part No. 5-P-721
(28) Input Gear Part No. 5-P-971
(29) Filler block furnished with P.T.O.

Parker Hannifin Corporation
Chelsea Products Division
Olive Branch, MS 38654 USA

RT-8608L

BOTTOM SIDE ONLY

TRANSMISSION GEAR DATA:
BOT 08-BOLT Opening Gear FORWARD of Centerline
47 Teeth - SPUR

PITCH LINE TO APERTURE FACE:
0.8050" (20.4500MM)

RIGHT SIDE ONLY

TRANSMISSION GEAR DATA:
R.S. 06-BOLT Opening Gear FORWARD of Centerline
45 Teeth - SPUR

PITCH LINE TO APERTURE FACE:
1.0850" (27.5600MM)

Caution: Application Approval Required for PTO Output Shaft Speeds Above 2500 RPM

BOTTOM Side PTO Model	Inter. Torq.	Dir. Rot.	Engine % Fwd.	Engine % Rev.	Filler Block	Adapter Assy.	Stud Kit	RIGHT Side PTO Model	Inter. Torq.	Dir. Rot.	Engine % Fwd.	Engine % Rev.	Filler Block	Adapter Assy.	Stud Kit
ONE SPEED - TWO GEAR - MECHANICAL SHIFT															
880XQAHX-*3 (16)	203	Opp	99				Furnished								
880XRAHX-*3 (7)	172	Opp	117				Furnished								
880XTAHX-*3 (8)	134	Opp	151				Furnished								
ONE SPEED - TWO GEAR POWERSHIFT (AIR OR HYDRAULIC)															
282XBAJX-*3	300	Opp	48				Furnished	272XAAJX-*3	300	Opp	37				Furnished
282XCAJX-*3	300	Opp	58				Furnished	272XBAJX-*3	300	Opp	46				Furnished
282XDAJX-*3	293	Opp	69				Furnished	272XCAJX-*3	300	Opp	55				Furnished
282XGAJX-*3	246	Opp	82				Furnished	272XDAJX-*3	300	Opp	65				Furnished
282XKAJX-*3	220	Opp	92				Furnished	272XGAJX-*3	257	Opp	78				Furnished
282XMAJX-*3	197	Opp	102				Furnished	272XKAJX-*3	230	Opp	88				Furnished
282XPAJX-*3	176	Opp	176				Furnished	272XMAJX-*3	206	Opp	98				Furnished
282XSAJX-*3	158	Opp	197				Furnished	272XPAJX-*3	184	Opp	109				Furnished
282XTAJX-*3	141	Opp	143				Furnished	272XSAJX-*3	165	Opp	122				Furnished
ONE SPEED - TWO GEAR - POWERSHIFT (AIR)															
230XAAJX-*3	250	Opp	37			328481X	Furnished	230XAAJX-*3	250	Opp	35				Furnished
230XBAJX-*3	250	Opp	48			328481X	Furnished	230XBAJX-*3	250	Opp	46				Furnished
230XDAJX-*3	250	Opp	55			328481X	Furnished	230XDAJX-*3	250	Opp	53				Furnished
230XKAJX-*3	250	Opp	75			328481X	Furnished	230XKAJX-*3	250	Opp	72				Furnished
230XQAJX-*3	203	Opp	100			328481X	Furnished	230XQAJX-*3	212	Opp	96				Furnished
230XUAJX-*3	126	Opp	160			328481X	Furnished	230XUAJX-*3	132	Opp	153				Furnished
238XAAHX-*3 (20)	250	Opp	49				Furnished	236XAAHX-*3 (20)	250	Opp	47				Furnished
238XDAHX-*3 (1)	250	Opp	74				Furnished	236XDAHX-*3 (1)	250	Opp	70				Furnished
238XKAHX-*3 (1)	215	Opp	94				Furnished	236XKAHX-*3 (1)	224	Opp	90				Furnished
238XQAHX-*3 (1)	160	Opp	127				Furnished	236XQAHX-*3 (1)	166	Opp	122				Furnished
238XUAHX-*3 (1)	139	Opp	145				Furnished	236XUAHX-*3 (1)	145	Opp	139				Furnished
885XBAHX-*3 (3)	423	Opp	48				Furnished								
885XGAHX-*3 (9)	329	Opp	61				Furnished								
885XJAHX-*3 (5)	279	Opp	72				Furnished								
885XMAHX-*3 (6)	238	Opp	85				Furnished								

Continued Next Page

CAUTION: Eaton Transmission Division has established a Maximum Torque Limit for the Transmission PTO Driver Gear. For all RT/RTO/RTLO transmissions the torque limit is 350 Ft-lbs [475 N.m] unless the transmission has been upgraded to a roller type input shaft bearing, Eaton part number 4301417, then 750 Ft-lbs [1017 N.m] torque becomes the Maximum limit. All torque limits on this application page reflect the 350 Ft-lbs [475 N.m] limit at the Transmission PTO Drive Gear.Refer to the Chelsea PTO Torque Limit Chart in the front of this section for complete torque limit information.

CAUTION: Do not use geared adapters with 442 "A" and "C" ratios.

CAUTION: 660/680 Series: Applications above 1500 RPM output shaft speed, contact Chelsea Technical Service for approval. DO NOT use Standard Geared Adapters w/660 Series, contact Chelsea Technical Service.

NOTE: The AK & XK output flanges can not be used with the "A" & "C" ratios on the 489 Series PTOs due to mounting stud interference. Use a RA or RB rotatable flange for the XK and the RA for the AK flange.

NOTE: The 442XBAH must use one of the geared adapters listed on the application page. The direction of rotation shown is the final output shaft rotation w/ geared adapter.

(1) Input Gear Part No. 5-P-1004
(3) Input Gear Part No. 5-P-1100
(5) Input Gear Part No. 5-P-1102
(6) Input Gear Part No. 5-P-1103
(7) Input Gear Part No. 5-P-1104
(8) Input Gear Part No. 5-P-1105
(9) Input Gear Part No. 5-P-1135
(16) Input Gear Part No. 5-P-1385
(20) Input Gear Part No. 5-P-1486

Parker Hannifin Corporation
Chelsea Products Division
Olive Branch, MS 38654 USA

RT-8608L

BOTTOM SIDE ONLY

TRANSMISSION GEAR DATA:
BOT 08-BOLT Opening Gear FORWARD of Centerline
47 Teeth - SPUR

PITCH LINE TO APERTURE FACE:
0.8050" (20.4500MM)

RIGHT SIDE ONLY

TRANSMISSION GEAR DATA:
R.S. 06-BOLT Opening Gear FORWARD of Centerline
45 Teeth - SPUR

PITCH LINE TO APERTURE FACE:
1.0850" (27.5600MM)

Caution: Application Approval Required for PTO Output Shaft Speeds Above 2500 RPM

BOTTOM Side PTO Model	Inter. Torq.	Dir. Rot.	Engine % Fwd.	Engine % Rev.	Filler Block	Adapter Assy.	Stud Kit	RIGHT Side PTO Model	Inter. Torq.	Dir. Rot.	Engine % Fwd.	Engine % Rev.	Filler Block	Adapter Assy.	Stud Kit
ONE SPEED - FORWARD & REVERSE															
348XFAHX-*5 (25)	200	Opp	61	64			Furnished	340XFAHX-*5 (25)	200	Opp	59	62	7-A-140(29)		Furnished
352ZSAHX-*3 (1)	140	Opp	136	177		328564X	Furnished	352XSAHX-*3 (1)	140	Opp	131	169			Furnished
863XBAHX-*5	423	Opp	48	59			Furnished								
GEARED ADAPTERS															
628XAHX-3AH	250	Eng	0		8-A-032		Furnished	626XAHX-3AH	250	Eng	0				Furnished
								630XAHX-3AH	250	Eng	0				Furnished
								645XAHX-3AH	250	Eng	0				Furnished

CAUTION: Eaton Transmission Division has established a Maximum Torque Limit for the Transmission PTO Driver Gear. For all RT/RTO/RTLO transmissions the torque limit is 350 Ft-lbs [475 N.m] unless the transmission has been upgraded to a roller type input shaft bearing, Eaton part number 4301417, then 750 Ft-lbs [1017 N.m] torque becomes the Maximum limit. All torque limits on this application page reflect the 350 Ft-lbs [475 N.m] limit at the Transmission PTO Drive Gear.Refer to the Chelsea PTO Torque Limit Chart in the front of this section for complete torque limit information.

CAUTION: Do not use geared adapters with 442 "A" and "C" ratios.

CAUTION: 660/680 Series: Applications above 1500 RPM output shaft speed, contact Chelsea Technical Service for approval. DO NOT use Standard Geared Adapters w/660 Series, contact Chelsea Technical Service.

NOTE: The AK & XK output flanges can not be used with the "A" & "C" ratios on the 489 Series PTOs due to mounting stud interference. Use a RA or RB rotatable flange for the XK and the RA for the AK flange.

NOTE: The 442XBAH must use one of the geared adapters listed on the application page. The direction of rotation shown is the final output shaft rotation w/ geared adapter.

(1) Input Gear Part No. 5-P-1004
(25) Input Gear Part No. 5-P-581
(29) Filler block furnished with P.T.O.

Parker Hannifin Corporation
Chelsea Products Division
Olive Branch, MS 38654 USA

RT-6609A
RT-7608LL
RT-8609

BOTTOM SIDE ONLY

TRANSMISSION GEAR DATA:
BOT 08-BOLT Opening Gear FORWARD of Centerline
33 Teeth - SPUR

PITCH LINE TO APERTURE FACE:
0.8100" (20.5700MM)

RIGHT SIDE ONLY

TRANSMISSION GEAR DATA:
R.S. 06-BOLT Opening Gear FORWARD of Centerline
33 Teeth - SPUR

PITCH LINE TO APERTURE FACE:
1.0900" (27.6900MM)

Caution: Application Approval Required for PTO Output Shaft Speeds Above 2500 RPM

BOTTOM Side PTO Model	Inter. Torq.	Dir. Rot.	Engine % Fwd.	Engine % Rev.	Filler Block	Adapter Assy.	Stud Kit	RIGHT Side PTO Model	Inter. Torq.	Dir. Rot.	Engine % Fwd.	Engine % Rev.	Filler Block	Adapter Assy.	Stud Kit
ONE SPEED - TWO GEAR - MECHANICAL SHIFT															
221XCAHX-*3	250	Opp	44		7-A-032(P)(29)	328481X	Furnished	221XCAHX-*3	250	Opp	44		7-A-032(29)		Furnished
221XEAHX-*3	250	Opp	51		7-A-032(P)	328481X	Furnished	221XEAHX-*3	250	Opp	51				Furnished
221XLAHX-*3	200	Opp	68		7-A-032(P)	328481X	Furnished	221XLAHX-*3	200	Opp	68				Furnished
221XPAHX-*3	200	Opp	83		7-A-032(P)	328481X	Furnished	221XPAHX-*3	200	Opp	83				Furnished
489XAAHX-*5 (12)	250	Opp	39				Furnished	442XAAHX-*3 (12)	250	Opp	39				Furnished
489XCAHX-*5 (13)	250	Opp	50				Furnished	442XBAHX-*3 (18)	250	Eng	39			REQUIRED	Furnished
489XFAHX-*5 (2)	250	Opp	61				Furnished	442XCAHX-*3 (13)	250	Opp	50				Furnished
489XHAHX-*5 (15)	250	Opp	71				Furnished	442XFAHX-*3 (2)	250	Opp	61				Furnished
489XLAHX-*5 (1)	250	Opp	79				Furnished	442XHAHX-*3 (15)	250	Opp	71				Furnished
489XQAHX-*5 (1)	225	Opp	85				Furnished	442XLAHX-*3 (1)	250	Opp	79				Furnished
489XRAHX-*5 (1)	225	Opp	99				Furnished	442XQAHX-*3 (1)	225	Opp	85				Furnished
489XSAHX-*5 (1)	200	Opp	118				Furnished	442XRAHX-*3 (1)	225	Opp	99				Furnished
489XUAHX-*5 (1)	195	Opp	140				Furnished	442XSAHX-*3 (1)	200	Opp	118				Furnished
489XWAHX-*5 (1)	175	Opp	165				Furnished	442XUAHX-*3 (1)	195	Opp	140				Furnished
489XXAHX-*5 (1)	140	Opp	195				Furnished	442XWAHX-*3 (1)	175	Opp	165				Furnished
680XFAHX-*3 (10)	375	Opp	61				Furnished	442XXAHX-*3 (1)	140	Opp	195				Furnished
680XHAHX-*3 (21)	375	Opp	71				Furnished	660XFAHX-*3 (10)	375	Opp	61				Furnished
680XQAHX-*3 (11)	375	Opp	85				Furnished	660XHAHX-*3 (15)	375	Opp	71				Furnished
680XRAHX-*3 (19)	350	Opp	99				Furnished	660XQAHX-*3 (11)	375	Opp	85				Furnished
680XSAHX-*3 (14)	325	Opp	118				Furnished	660XRAHX-*3 (19)	350	Opp	99				Furnished
823XBAHX-*3 (23)	500	Opp	42				Furnished	660XSAHX-*3 (14)	325	Opp	118				Furnished
823XDAHX-*3 (27)	500	Opp	50				Furnished								
823XGAHX-*3 (28)	500	Opp	54				Furnished								
823XJAHX-*3 (24)	500	Opp	63				Furnished								
823XMAHX-*3 (22)	500	Opp	74				Furnished								
823XRAHX-*3 (26)	400	Opp	103				Furnished								
823XTKTX-*3 (17)	500	Opp	124		8-A-165(29)		Furnished								
880XBAHX-*3 (3)	500	Opp	42				Furnished								
880XDAHX-*3 (4)	500	Opp	49				Furnished								
880XGAHX-*3 (9)	500	Opp	54				Furnished								
880XJAHX-*3 (5)	500	Opp	63				Furnished								
880XMAHX-*3 (6)	500	Opp	74				Furnished								

Continued Next Page

CAUTION: 660/680 Series: Applications above 1500 RPM output shaft speed, contact Chelsea Technical Service for approval. DO NOT use Standard Geared Adapters w/660 Series, contact Chelsea Technical Service.

CAUTION: Do not use geared adapters with 442 "A" and "C" ratios.

NOTE: The AK & XK output flanges can not be used with the "A" & "C" ratios on the 489 Series PTOs due to mounting stud interference. Use a RA or RB rotatable flange for the XK and the RA for the AK flange.

NOTE: The 442XBAH must use one of the geared adapters listed on the application page. The direction of rotation shown is the final output shaft rotation w/ geared adapter.

(1) Input Gear Part No. 5-P-1004
(2) Input Gear Part No. 5-P-1077
(3) Input Gear Part No. 5-P-1100
(4) Input Gear Part No. 5-P-1101
(5) Input Gear Part No. 5-P-1102
(6) Input Gear Part No. 5-P-1103
(9) Input Gear Part No. 5-P-1135
(10) Input Gear Part No. 5-P-1242
(11) Input Gear Part No. 5-P-1246
(12) Input Gear Part No. 5-P-1280
(13) Input Gear Part No. 5-P-1287
(14) Input Gear Part No. 5-P-1322
(15) Input Gear Part No. 5-P-1364
(17) Input Gear Part No. 5-P-1395
(18) Input Gear Part No. 5-P-1418
(19) Input Gear Part No. 5-P-1441
(21) Input Gear Part No. 5-P-1494
(22) Input Gear Part No. 5-P-283
(23) Input Gear Part No. 5-P-285
(24) Input Gear Part No. 5-P-325
(26) Input Gear Part No. 5-P-721
(27) Input Gear Part No. 5-P-971
(28) Input Gear Part No. 5-P-980
(29) Filler block furnished with P.T.O.

Parker Hannifin Corporation
Chelsea Products Division
Olive Branch, MS 38654 USA

RT-6609A
RT-7608LL
RT-8609

BOTTOM SIDE ONLY

TRANSMISSION GEAR DATA:
BOT 08-BOLT Opening Gear FORWARD of Centerline
33 Teeth - SPUR

PITCH LINE TO APERTURE FACE:
0.8100" (20.5700MM)

RIGHT SIDE ONLY

TRANSMISSION GEAR DATA:
R.S. 06-BOLT Opening Gear FORWARD of Centerline
33 Teeth - SPUR

PITCH LINE TO APERTURE FACE:
1.0900" (27.6900MM)

Caution: Application Approval Required for PTO Output Shaft Speeds Above 2500 RPM

BOTTOM Side PTO Model	Inter. Torq.	Dir. Rot.	Engine % Fwd.	Engine % Rev.	Filler Block	Adapter Assy.	Stud Kit	RIGHT Side PTO Model	Inter. Torq.	Dir. Rot.	Engine % Fwd.	Engine % Rev.	Filler Block	Adapter Assy.	Stud Kit
ONE SPEED - TWO GEAR - MECHANICAL SHIFT															
880XQAHX-*3 (16)	450	Opp	87				Furnished								
880XRAHX-*3 (7)	400	Opp	103				Furnished								
880XTAHX-*3 (8)	500	Opp	132				Furnished								
ONE SPEED - TWO GEAR POWERSHIFT (AIR OR HYDRAULIC)															
282XBAJX-*3	300	Opp	42				Furnished	272XAAJX-*3	300	Opp	34				Furnished
282XCAJX-*3	300	Opp	51				Furnished	272XBAJX-*3	300	Opp	42				Furnished
282XDAJX-*3	293	Opp	60				Furnished	272XCAJX-*3	300	Opp	51				Furnished
282XGAJX-*3	246	Opp	72				Furnished	272XDAJX-*3	293	Opp	60				Furnished
282XKAJX-*3	220	Opp	80				Furnished	272XGAJX-*3	246	Opp	72				Furnished
282XMAJX-*3	197	Opp	90				Furnished	272XKAJX-*3	220	Opp	80				Furnished
282XPAJX-*3	176	Opp	100				Furnished	272XMAJX-*3	197	Opp	90				Furnished
282XSAJX-*3	158	Opp	112				Furnished	272XPAJX-*3	176	Opp	100				Furnished
282XTAJX-*3	141	Opp	126				Furnished	272XSAJX-*3	158	Opp	112				Furnished
ONE SPEED - TWO GEAR - POWERSHIFT (AIR)															
230XAAJX-*3	250	Opp	32			328481X	Furnished	230XAAJX-*3	250	Opp	32				Furnished
230XBAJX-*3	250	Opp	42			328481X	Furnished	230XBAJX-*3	250	Opp	42				Furnished
230XDAJX-*3	250	Opp	49			328481X	Furnished	230XDAJX-*3	250	Opp	49				Furnished
230XKAJX-*3	250	Opp	66			328481X	Furnished	230XKAJX-*3	250	Opp	66				Furnished
230XQAJX-*3	250	Opp	87			328481X	Furnished	230XQAJX-*3	250	Opp	87				Furnished
230XUAJX-*3	225	Opp	140			328481X	Furnished	230XUAJX-*3	225	Opp	140				Furnished
238XAAHX-*3 (20)	250	Opp	64				Furnished	236XAAHX-*3 (20)	250	Opp	43				Furnished
238XDAHX-*3 (1)	250	Opp	64				Furnished	236XDAHX-*3 (1)	250	Opp	64				Furnished
238XKAHX-*3 (1)	250	Opp	82				Furnished	236XKAHX-*3 (1)	250	Opp	82				Furnished
885XBAHX-*3 (3)	500	Opp	42				Furnished	236XQAHX-*3 (1)	250	Opp	111				Furnished
885XGAHX-*3 (9)	500	Opp	54				Furnished	236XUAHX-*3 (1)	225	Opp	127				Furnished
885XJAHX-*3 (5)	500	Opp	63				Furnished								
885XMAHX-*3 (6)	500	Opp	74				Furnished								
ONE SPEED - FORWARD & REVERSE															
348ZFAHX-* (25)	200	Opp	54	56	8-A-032(29)		Furnished	340XFAHX-*5 (25)	200	Opp	54	56	7-A-140(29)		Furnished

Continued Next Page

CAUTION: 660/680 Series: Applications above 1500 RPM output shaft speed, contact Chelsea Technical Service for approval. DO NOT use Standard Geared Adapters w/660 Series, contact Chelsea Technical Service.

CAUTION: Do not use geared adapters with 442 "A" and "C" ratios.

NOTE: The AK & XK output flanges can not be used with the "A" & "C" ratios on the 489 Series PTOs due to mounting stud interference. Use a RA or RB rotatable flange for the XK and the RA for the AK flange.

NOTE: The 442XBAH must use one of the geared adapters listed on the application page. The direction of rotation shown is the final output shaft rotation w/ geared adapter.

(1) Input Gear Part No. 5-P-1004
(3) Input Gear Part No. 5-P-1100
(5) Input Gear Part No. 5-P-1102
(6) Input Gear Part No. 5-P-1103
(7) Input Gear Part No. 5-P-1104
(8) Input Gear Part No. 5-P-1105
(9) Input Gear Part No. 5-P-1135
(16) Input Gear Part No. 5-P-1385
(20) Input Gear Part No. 5-P-1486
(25) Input Gear Part No. 5-P-581
(29) Filler block furnished with P.T.O.

Parker Hannifin Corporation
Chelsea Products Division
Olive Branch, MS 38654 USA

RT-6609A
RT-7608LL
RT-8609

BOTTOM SIDE ONLY

TRANSMISSION GEAR DATA:
BOT 08-BOLT Opening Gear FORWARD of Centerline
33 Teeth - SPUR

PITCH LINE TO APERTURE FACE:
0.8100" (20.5700MM)

RIGHT SIDE ONLY

TRANSMISSION GEAR DATA:
R.S. 06-BOLT Opening Gear FORWARD of Centerline
33 Teeth - SPUR

PITCH LINE TO APERTURE FACE:
1.0900" (27.6900MM)

Caution: Application Approval Required for PTO Output Shaft Speeds Above 2500 RPM

BOTTOM Side PTO Model	Inter. Torq.	Dir. Rot.	Engine % Fwd.	Engine % Rev.	Filler Block	Adapter Assy.	Stud Kit	RIGHT Side PTO Model	Inter. Torq.	Dir. Rot.	Engine % Fwd.	Engine % Rev.	Filler Block	Adapter Assy.	Stud Kit
ONE SPEED - FORWARD & REVERSE															
352ZSAHX-*3 (1)	140	Opp	119	154		328564X	Furnished	352XSAHX-*3 (1)	140	Opp	119	154			Furnished
863XBAHX-*5	500	Opp	42	52			Furnished								
GEARED ADAPTERS															
628XAHX-3AH	250	Eng	0		8-A-032		Furnished	626XAHX-3AH	250	Eng	0				Furnished
								630XAHX-3AH	250	Eng	0				Furnished
								645XAHX-3AH	250	Eng	0				Furnished

CAUTION: 660/680 Series: Applications above 1500 RPM output shaft speed, contact Chelsea Technical Service for approval. DO NOT use Standard Geared Adapters w/660 Series, contact Chelsea Technical Service.

CAUTION: Do not use geared adapters with 442 "A" and "C" ratios.

NOTE: The AK & XK output flanges can not be used with the "A" & "C" ratios on the 489 Series PTOs due to mounting stud interference. Use a RA or RB rotatable flange for the XK and the RA for the AK flange.

NOTE: The 442XBAH must use one of the geared adapters listed on the application page. The direction of rotation shown is the final output shaft rotation w/ geared adapter.

(1) Input Gear Part No. 5-P-1004

Eaton Fuller

Parker Hannifin Corporation
Chelsea Products Division
Olive Branch, MS 38654 USA

FS-5306A
FS-5406A
FS-6206A
FS-6306A
FS-6406A
FS-6206
FS-6306
FS-6406

LEFT SIDE ONLY

TRANSMISSION GEAR DATA:
L.S. 06-BOLT Opening Gear FORWARD of Centerline
38 Teeth - R.H. HELIX

PITCH LINE TO APERTURE FACE:
1.0850" (27.5590MM)

RIGHT SIDE ONLY

TRANSMISSION GEAR DATA:
R.S. 06-BOLT Opening Gear FORWARD of Centerline
38 Teeth - R.H. HELIX

PITCH LINE TO APERTURE FACE:
1.0850" (27.5590MM)

Caution: Application Approval Required for PTO Output Shaft Speeds Above 2500 RPM

LEFT Side PTO Model	Inter. Torq.	Dir. Rot.	Engine % Fwd.	Engine % Rev.	Filler Block	Adapter Assy.	Stud Kit	RIGHT Side PTO Model	Inter. Torq.	Dir. Rot.	Engine % Fwd.	Engine % Rev.	Filler Block	Adapter Assy.	Stud Kit
ONE SPEED - TWO GEAR - MECHANICAL SHIFT															
442XAESX-*5 (3)	250	Opp	32		7-A-062		Furnished	442XAESX-*3 (3)	250	Opp	32		7-A-062		Furnished
442XCESX-*5 (4)	250	Opp	41		7-A-062		Furnished	442XCESX-*3 (4)	250	Opp	41		7-A-062		Furnished
442XFESX-*5 (2)	250	Opp	51		7-A-062		Furnished	442XFESX-*3 (2)	250	Opp	51		7-A-062		Furnished
442XLESX-*5 (1)	250	Opp	66		7-A-062		Furnished	442XLESX-*3 (1)	250	Opp	66		7-A-062		Furnished
442XQESX-*5 (1)	225	Opp	71		7-A-062		Furnished	442XQESX-*3 (1)	225	Opp	71		7-A-062		Furnished
442XRESX-*5 (1)	225	Opp	82		7-A-062		Furnished	442XRESX-*3 (1)	225	Opp	82		7-A-062		Furnished
442XSESX-*5 (1)	200	Opp	98		7-A-062		Furnished	442XSESX-*3 (1)	200	Opp	98		7-A-062		Furnished
442XUESX-*5 (1)	195	Opp	117		7-A-062		Furnished	442XUESX-*3 (1)	195	Opp	117		7-A-062		Furnished
442XWESX-*5 (1)	175	Opp	138		7-A-062		Furnished	442XWESX-*3 (1)	175	Opp	138		7-A-062		Furnished
442XXESX-*5 (1)	140	Opp	163		7-A-062		Furnished	442XXESX-*3 (1)	140	Opp	163		7-A-062		Furnished
ONE SPEED - TWO GEAR POWERSHIFT (AIR OR HYDRAULIC)															
272XAESX-*5	300	Opp	31		7-A-062		Furnished	272XAESX-*3	300	Opp	31		7-A-062		Furnished
272XBESX-*5	300	Opp	38		7-A-062		Furnished	272XBESX-*3	300	Opp	38		7-A-062		Furnished
272XCESX-*5	300	Opp	46		7-A-062		Furnished	272XCESX-*3	300	Opp	46		7-A-062		Furnished
272XDESX-*5	300	Opp	55		7-A-062		Furnished	272XDESX-*3	300	Opp	55		7-A-062		Furnished
272XGESX-*5	300	Opp	65		7-A-062		Furnished	272XGESX-*3	300	Opp	65		7-A-062		Furnished
272XKESX-*5	300	Opp	73		7-A-062		Furnished	272XKESX-*3	300	Opp	73		7-A-062		Furnished
272XMESX-*5	300	Opp	82		7-A-062		Furnished	272XMESX-*3	300	Opp	82		7-A-062		Furnished
272XPESX-*5	286	Opp	91		7-A-062		Furnished	272XPESX-*3	286	Opp	91		7-A-062		Furnished
272XSESX-*5	256	Opp	102		7-A-062		Furnished	272XSESX-*3	256	Opp	102		7-A-062		Furnished
ONE SPEED - TWO GEAR - POWERSHIFT (AIR)															
236XDESX-*5 (1)	250	Opp	53		7-A-062		Furnished	236XDESX-*3 (1)	250	Opp	53		7-A-062		Furnished
236XKESX-*5 (1)	250	Opp	68		7-A-062		Furnished	236XKESX-*3 (1)	250	Opp	68		7-A-062		Furnished
236XQESX-*5 (1)	250	Opp	93		7-A-062		Furnished	236XQESX-*3 (1)	250	Opp	93		7-A-062		Furnished
236XUESX-*5 (1)	225	Opp	106		7-A-062		Furnished	236XUESX-*3 (1)	225	Opp	106		7-A-062		Furnished
ONE SPEED - FORWARD & REVERSE															
340XFESX-*5 (5)	200	Opp	47	49	7-A-140(6) 7-A-093	328170-76X		340XFESX-*5 (5)	200	Opp	47	49	7-A-140(6) 7-A-093	328170-76X	
352XSESX-*5 (1)	140	Opp	99	129	7-A-062		Furnished	352XSESX-*3 (1)	140	Opp	99	129	7-A-062		Furnished

Continued Next Page

CAUTION: Do not use geared adapters with 442 "A" and "C" ratios.

NOTE: 511/523 Rear Mounts-The adapter noted is furnished with the PTO and does not need to be ordered separately.

(1) Input Gear Part No. 5-P-1059
(2) Input Gear Part No. 5-P-1092
(3) Input Gear Part No. 5-P-1285
(4) Input Gear Part No. 5-P-1292
(5) Input Gear Part No. 5-P-884

(6) Filler block furnished with P.T.O.

Parker Hannifin Corporation
Chelsea Products Division
Olive Branch, MS 38654 USA

Eaton Fuller

FS-5306A
FS-5406A
FS-6206A
FS-6306A
FS-6406A
FS-6206
FS-6306
FS-6406

LEFT SIDE ONLY

TRANSMISSION GEAR DATA:
L.S. 06-BOLT Opening Gear FORWARD of Centerline
38 Teeth - R.H. HELIX

PITCH LINE TO APERTURE FACE:
1.0850" (27.5590MM)

RIGHT SIDE ONLY

TRANSMISSION GEAR DATA:
R.S. 06-BOLT Opening Gear FORWARD of Centerline
38 Teeth - R.H. HELIX

PITCH LINE TO APERTURE FACE:
1.0850" (27.5590MM)

Caution: Application Approval Required for PTO Output Shaft Speeds Above 2500 RPM

GEARED ADAPTERS

LEFT Side PTO Model	Inter. Torq.	Dir. Rot.	Engine % Fwd.	Engine % Rev.	Filler Block	Adapter Assy.	Stud Kit	RIGHT Side PTO Model	Inter. Torq.	Dir. Rot.	Engine % Fwd.	Engine % Rev.	Filler Block	Adapter Assy.	Stud Kit
626XESX-4HL	250	Eng	0		7-A-062		Furnished	626XESX-3HL	250	Eng	0		7-A-062		Furnished
630XESX-4HL	250	Eng	0		7-A-062		Furnished	630XESX-3HL	250	Eng	0		7-A-062		Furnished
645XESX-4HL	250	Eng	0		7-A-062		Furnished	645XESX-3HL	250	Eng	0		7-A-062		Furnished

Continued Next Page

CAUTION: Do not use geared adapters with 442 "A" and "C" ratios.

NOTE: 511/523 Rear Mounts-The adapter noted is furnished with the PTO and does not need to be ordered separately.

Parker Hannifin Corporation
Chelsea Products Division
Olive Branch, MS 38654 USA

FS-5306A
FS-5406A
FS-6206A
FS-6306A
FS-6406A
FS-6206
FS-6306
FS-6406

REAR SIDE ONLY

TRANSMISSION GEAR DATA:
REAR 04-BOLT Opening

PITCH LINE TO APERTURE FACE:

Caution: Application Approval Required for PTO Output Shaft Speeds Above 2500 RPM

REAR MOUNT - MECHANICAL SHIFT (6 SPEED TRANSMISSIONS)

REAR Side PTO Model	Inter. Torq.	Dir. Rot.	Engine % Fwd.	Engine % Rev.	Filler Block	Adapter Assy.	Stud Kit	Inter. Torq.	Dir. Rot.	Engine % Fwd.	Engine % Rev.	Filler Block	Adapter Assy.	Stud Kit
511XRALW-*-*	590	Opp	52			329748X	Furnished							
523XTALX-*-*	258	Opp	72			329748X	Furnished							
523XVALX-*-*	258	Eng	86			329748X	Furnished							

CAUTION: Do not use geared adapters with 442 "A" and "C" ratios.

NOTE: 511/523 Rear Mounts-The adapter noted is furnished with the PTO and does not need to be ordered separately.

Eaton Fuller

Parker Hannifin Corporation
Chelsea Products Division
Olive Branch, MS 38654 USA

FS-6205A
FS-6305A

LEFT SIDE ONLY

TRANSMISSION GEAR DATA:
L.S. 06-BOLT Opening Gear FORWARD of Centerline
39 Teeth - R.H. HELIX

PITCH LINE TO APERTURE FACE:
1.0000" (25.4000MM)

RIGHT SIDE ONLY

TRANSMISSION GEAR DATA:
R.S. 06-BOLT Opening Gear FORWARD of Centerline
39 Teeth - R.H. HELIX

PITCH LINE TO APERTURE FACE:
1.0000" (25.4000MM)

Caution: Application Approval Required for PTO Output Shaft Speeds Above 2500 RPM

LEFT Side PTO Model	Inter. Torq.	Dir. Rot.	Engine % Fwd.	Engine % Rev.	Filler Block	Adapter Assy.	Stud Kit	RIGHT Side PTO Model	Inter. Torq.	Dir. Rot.	Engine % Fwd.	Engine % Rev.	Filler Block	Adapter Assy.	Stud Kit
ONE SPEED - TWO GEAR - MECHANICAL SHIFT															
442KAESX-*5 (3)	250	Opp	30		7-A-165		7170-3X	442KAESX-*3 (3)	250	Opp	30		7-A-165		7170-3X
442KCESX-*5 (4)	250	Opp	39		7-A-165		7170-3X	442KCESX-*3 (4)	250	Opp	39		7-A-165		7170-3X
442KFESX-*5 (2)	250	Opp	48		7-A-165		7170-3X	442KFESX-*3 (2)	250	Opp	48		7-A-165		7170-3X
442KLESX-*5 (1)	250	Opp	62		7-A-165		7170-3X	442KLESX-*3 (1)	250	Opp	62		7-A-165		7170-3X
442KQESX-*5 (1)	225	Opp	67		7-A-165		7170-3X	442KQESX-*3 (1)	225	Opp	67		7-A-165		7170-3X
447KQESX-*5 (5)	225	Opp	67		7-A-165		7170-3X	447KQESX-*3 (5)	225	Opp	67		7-A-165		7170-3X
447KSESX-*5 (6)	200	Opp	93		7-A-165		7170-3X	447KSESX-*3 (6)	200	Opp	93		7-A-165		7170-3X
447KUESX-*5 (7)	195	Opp	110		7-A-165		7170-3X	447KUESX-*3 (7)	195	Opp	110		7-A-165		7170-3X
447KWESX-*5 (8)	175	Opp	130		7-A-165		7170-3X	447KWESX-*3 (8)	175	Opp	130		7-A-165		7170-3X
ONE SPEED - TWO GEAR POWERSHIFT (AIR OR HYDRAULIC)															
272XAESX-*5	300	Opp	29				Furnished	272XAESX-*3	300	Opp	29				Furnished
272XBESX-*5	300	Opp	36				Furnished	272XBESX-*3	300	Opp	36				Furnished
272XCESX-*5	300	Opp	43				Furnished	272XCESX-*3	300	Opp	43				Furnished
272XDESX-*5	300	Opp	52				Furnished	272XDESX-*3	300	Opp	52				Furnished
272XGESX-*5	300	Opp	61				Furnished	272XGESX-*3	300	Opp	61				Furnished
272XKESX-*5	300	Opp	69				Furnished	272XKESX-*3	300	Opp	69				Furnished
272XMESX-*5	300	Opp	77				Furnished	272XMESX-*3	300	Opp	77				Furnished
272XPESX-*5	279	Opp	86				Furnished	272XPESX-*3	279	Opp	86				Furnished
272XSESX-*5	250	Opp	96				Furnished	272XSESX-*3	250	Opp	96				Furnished
ONE SPEED - TWO GEAR - POWERSHIFT (AIR)															
236KDESX-*5 (1)	250	Opp	50		7-A-165		7170-3X	236KDESX-*3 (1)	250	Opp	50		7-A-165		7170-3X
ONE SPEED - FORWARD & REVERSE															
340XFESX-*5 (9)	200	Opp	44	46	7-A-140(10) 7-A-200		328170-76X	340XFESX-*5 (9)	200	Opp	44	46	7-A-140(10) 7-A-200		328170-76X

NOTE: Do not use PTOs that have a sliding Input Driver Gear (i.e. 221, 260)

(1) Input Gear Part No. 5-P-1059
(2) Input Gear Part No. 5-P-1092
(3) Input Gear Part No. 5-P-1285
(4) Input Gear Part No. 5-P-1292
(5) Input Gear Part No. 5-P-869
(6) Input Gear Part No. 5-P-870
(7) Input Gear Part No. 5-P-871
(8) Input Gear Part No. 5-P-872
(9) Input Gear Part No. 5-P-884
(10) Filler block furnished with P.T.O.

Eaton Fuller

Parker Hannifin Corporation
Chelsea Products Division
Olive Branch, MS 38654 USA

FS-6205B
FS-6305B

LEFT SIDE ONLY

TRANSMISSION GEAR DATA:
L.S. 06-BOLT Opening Gear FORWARD of Centerline
41 Teeth - R.H. HELIX

PITCH LINE TO APERTURE FACE:
0.8860" (22.5044MM)

RIGHT SIDE ONLY

TRANSMISSION GEAR DATA:
R.S. 06-BOLT Opening Gear FORWARD of Centerline
41 Teeth - R.H. HELIX

PITCH LINE TO APERTURE FACE:
0.8660" (22.5044MM)

Caution: Application Approval Required for PTO Output Shaft Speeds Above 2500 RPM

LEFT Side PTO Model	Inter. Torq.	Dir. Rot.	Engine % Fwd.	Engine % Rev.	Filler Block	Adapter Assy.	Stud Kit	RIGHT Side PTO Model	Inter. Torq.	Dir. Rot.	Engine % Fwd.	Engine % Rev.	Filler Block	Adapter Assy.	Stud Kit
ONE SPEED - TWO GEAR - MECHANICAL SHIFT															
447XQETX-*5 (1)	200	Opp	82				Furnished	447XQETX-*3 (1)	200	Opp	82				Furnished
447XSETX-*5 (2)	200	Opp	113				Furnished	447XSETX-*3 (2)	200	Opp	113				Furnished
447XUETX-*5 (3)	195	Opp	134				Furnished	447XUETX-*3 (3)	195	Opp	134				Furnished
447XWETX-*5 (4)	175	Opp	158				Furnished	447XWETX-*3 (4)	175	Opp	158				Furnished
ONE SPEED - FORWARD & REVERSE															
340XFETX-*5 (5)	200	Opp	44	46	7-A-140(6) 7-A-300		7170-3X	340XFETX-*5 (5)	200	Opp	44	46	7-A-140(6) 7-A-300		7170-3X

(1) Input Gear Part No. 5-P-865
(2) Input Gear Part No. 5-P-866
(3) Input Gear Part No. 5-P-867
(4) Input Gear Part No. 5-P-868
(5) Input Gear Part No. 5-P-948

(6) Filler block furnished with P.T.O.

Eaton Fuller

Parker Hannifin Corporation
Chelsea Products Division
Olive Branch, MS 38654 USA

T-14607A
T-14607B

LEFT SIDE ONLY

TRANSMISSION GEAR DATA:
L.S. 08-BOLT Opening Gear FORWARD of Centerline
78 Teeth - SPUR

PITCH LINE TO APERTURE FACE:
0.8650" (21.9710MM)

RIGHT SIDE ONLY

TRANSMISSION GEAR DATA:
R.S. 06-BOLT Opening Gear FORWARD of Centerline
78 Teeth - SPUR

PITCH LINE TO APERTURE FACE:
0.9740" (24.7400MM)

Caution: Application Approval Required for PTO Output Shaft Speeds Above 2500 RPM

LEFT Side PTO Model	Inter. Torq.	Dir. Rot.	Engine % Fwd.	Engine % Rev.	Filler Block	Adapter Assy.	Stud Kit	RIGHT Side PTO Model	Inter. Torq.	Dir. Rot.	Engine % Fwd.	Engine % Rev.	Filler Block	Adapter Assy.	Stud Kit
ONE SPEED - TWO GEAR - MECHANICAL SHIFT															
489XFEVX-*5 (2)	250	Opp	57		8-A-062		Furnished	442KFEVX-*5 (2)	250	Opp	57		7-A-187		7170-3X
489XLEVX-*5 (1)	250	Opp	73		8-A-062		Furnished	442KLEVX-*5 (1)	250	Opp	73		7-A-187		7170-3X
489XQEVX-*5 (1)	225	Opp	79		8-A-062		Furnished	442KQEVX-*5 (1)	225	Opp	79		7-A-187		7170-3X
489XREVX-*5 (1)	225	Opp	92		8-A-062		Furnished	442KREVX-*5 (1)	225	Opp	92		7-A-187		7170-3X
489XSEVX-*5 (1)	200	Opp	109		8-A-062		Furnished	442KSEVX-*5 (1)	200	Opp	109		7-A-187		7170-3X
489XUEVX-*5 (1)	195	Opp	130		8-A-062		Furnished	442KUEVX-*5 (1)	195	Opp	130		7-A-187		7170-3X
489XWEVX-*5 (1)	175	Opp	153		8-A-062		Furnished	442KWEVX-*5 (1)	175	Opp	153		7-A-187		7170-3X
489XXEVX-*5 (1)	140	Opp	181		8-A-062		Furnished	442KXEVX-*5 (1)	140	Opp	181		7-A-187		7170-3X
ONE SPEED - TWO GEAR - POWERSHIFT (AIR)															
238XDEVX-*5 (1)	250	Opp	59		8-A-062		Furnished	236KDEVX-*5 (1)	250	Opp	59		7-A-187		7170-3X
238XKEVX-*5 (1)	250	Opp	76		8-A-062		Furnished	236KKEVX-*5 (1)	250	Opp	76		7-A-187		7170-3X
238XQEVX-*5 (1)	250	Opp	103		8-A-062		Furnished	236KQEVX-*5 (1)	250	Opp	103		7-A-187		7170-3X
238XUEVX-*5 (1)	225	Opp	118		8-A-062		Furnished	236KUEVX-*5 (1)	225	Opp	118		7-A-187		7170-3X
ONE SPEED - FORWARD & REVERSE															
352XSEVX-*5 (1)	140	Opp	110	143	7-A-062(P)	328481X	328170-76X	352XSEVX-*5 (1)	140	Opp	110	143	7-A-187		7170-3X
GEARED ADAPTERS															
628XEVX-4EV	250	Eng	0		8-A-062		Furnished	626KEVX-3EV	250	Eng	0		7-A-187		7170-3X
								630KEVX-3EV	250	Eng	0		7-A-187		7170-3X
								645KEVX-3EV	250	Eng	0		7-A-187		7170-3X

NOTE: Do not use PTOs that have a sliding Input Driver Gear (i.e. 221, 260)

NOTE: RECOMMENDATION - Use assembly arrangement "5" on RH side. With assembly arrangement "3", there may be interference with the output shaft of the PTO and the rear cover on the transmission.

(1) Input Gear Part No. 5-P-1060
(2) Input Gear Part No. 5-P-1094

Eaton Fuller

Parker Hannifin Corporation
Chelsea Products Division
Olive Branch, MS 38654 USA

TX-14607B

LEFT SIDE ONLY

TRANSMISSION GEAR DATA:
L.S. 08-BOLT Opening Gear REAR of Centerline
78 Teeth - SPUR

PITCH LINE TO APERTURE FACE:
0.8650" (21.9710MM)

RIGHT SIDE ONLY

TRANSMISSION GEAR DATA:
R.S. 06-BOLT Opening Gear REAR of Centerline
78 Teeth - SPUR

PITCH LINE TO APERTURE FACE:
0.9740" (24.7400MM)

Caution: Application Approval Required for PTO Output Shaft Speeds Above 2500 RPM

LEFT Side PTO Model	Inter. Torq.	Dir. Rot.	Engine % Fwd.	Engine % Rev.	Filler Block	Adapter Assy.	Stud Kit	RIGHT Side PTO Model	Inter. Torq.	Dir. Rot.	Engine % Fwd.	Engine % Rev.	Filler Block	Adapter Assy.	Stud Kit
ONE SPEED - TWO GEAR - MECHANICAL SHIFT															
489XFEVX-*4 (2)	250	Opp	76		8-A-032		Furnished	442KFEVX-*4 (2)	250	Opp	76		7-A-187		7170-3X
489XLEVX-*4 (1)	250	Opp	98		8-A-032		Furnished	442KLEVX-*4 (1)	250	Opp	98		7-A-187		7170-3X
489XQEVX-*4 (1)	225	Opp	106		8-A-032		Furnished	442KQEVX-*4 (1)	225	Opp	106		7-A-187		7170-3X
489XREVX-*4 (1)	225	Opp	122		8-A-032		Furnished	442KREVX-*4 (1)	225	Opp	122		7-A-187		7170-3X
								447KQEVX-*4 (3)	225	Opp	106		7-A-187		7171-3X
								447KREVX-*4 (7)	225	Opp	122		7-A-187		7170-3X
								447KSEVX-*4 (4)	200	Opp	146		7-A-187		7170-3X
								447KUEVX-*4 (5)	195	Opp	174		7-A-187		7170-3X
								447KWEVX-*4 (6)	175	Opp	204		7-A-187		7170-3X
ONE SPEED - TWO GEAR - POWERSHIFT (AIR)															
238XDEVX-*4 (1)	250	Opp	80		8-A-032		Furnished	236KDEVX-*4 (1)	250	Opp	79		7-A-187		7170-3X
238XKEVX-*4 (1)	250	Opp	102		8-A-032		Furnished	236KKEVX-*4 (1)	250	Opp	101		7-A-187		7170-3X
ONE SPEED - FORWARD & REVERSE															
352XSEVX-*4 (1)	140	Opp	148	191	7-A-062(P)	328481X	328170-76X	352XSEVX-*4 (1)	140	Opp	148	191	7-A-187		7170-3X
GEARED ADAPTERS															
628XEVX-3EV	250	Eng	0		8-A-062		Furnished	626KEVX-4EV	250	Eng	0		7-A-187		7170-3X
								630KEVX-4EV	250	Eng	0		7-A-187		7170-3X
								645KEVX-4EV	250	Eng	0		7-A-187		7170-3X

NOTE: The 442/489 S, U, W, and X ratio gears interfere with the outside diameter of the 78 tooth transmission gear.

(1) Input Gear Part No. 5-P-1060
(2) Input Gear Part No. 5-P-1094
(3) Input Gear Part No. 5-P-1205
(4) Input Gear Part No. 5-P-1206
(5) Input Gear Part No. 5-P-1207
(6) Input Gear Part No. 5-P-1208
(7) Input Gear Part No. 5-P-1219

Parker Hannifin Corporation
Chelsea Products Division
Olive Branch, MS 38654 USA

FS-4205A

LEFT SIDE ONLY

TRANSMISSION GEAR DATA:
L.S. 06-BOLT Opening Gear FORWARD of Centerline
28 Teeth - R.H. HELIX

PITCH LINE TO APERTURE FACE:
1.1469" (29.1313MM)

RIGHT SIDE ONLY

TRANSMISSION GEAR DATA:
R.S. 06-BOLT Opening Gear FORWARD of Centerline
28 Teeth - R.H. HELIX

PITCH LINE TO APERTURE FACE:
1.1469" (29.1313MM)

Caution: Application Approval Required for PTO Output Shaft Speeds Above 2500 RPM

LEFT Side PTO Model	Inter. Torq.	Dir. Rot.	Engine % Fwd.	Engine % Rev.	Filler Block	Adapter Assy.	Stud Kit	RIGHT Side PTO Model	Inter. Torq.	Dir. Rot.	Engine % Fwd.	Engine % Rev.	Filler Block	Adapter Assy.	Stud Kit
ONE SPEED - TWO GEAR - MECHANICAL SHIFT															
442XFEWX-*5 (2)	250	Opp	36				Furnished	442XFEWX-*3 (2)	250	Opp	36				Furnished
442XLEWX-*5 (1)	250	Opp	47				Furnished	442XLEWX-*3 (1)	250	Opp	47				Furnished
442XQEWX-*5 (1)	225	Opp	51				Furnished	442XQEWX-*3 (1)	225	Opp	51				Furnished
442XREWX-*5 (1)	225	Opp	59				Furnished	442XREWX-*3 (1)	225	Opp	59				Furnished
442XSEWX-*5 (1)	200	Opp	70				Furnished	442XSEWX-*3 (1)	200	Opp	70				Furnished
442XUEWX-*5 (1)	195	Opp	84				Furnished	442XUEWX-*3 (1)	195	Opp	84				Furnished
442XWEWX-*5 (1)	175	Opp	98				Furnished	442XWEWX-*3 (1)	175	Opp	98				Furnished
442XXEWX-*5 (1)	140	Opp	116				Furnished	442XXEWX-*3 (1)	140	Opp	116				Furnished
ONE SPEED - TWO GEAR - POWERSHIFT (AIR)															
236XDEWX-*5 (1)	250	Opp	38				Furnished	236XDEWX-*3 (1)	250	Opp	38				Furnished
236XKEWX-*5 (1)	250	Opp	49				Furnished	236XKEWX-*3 (1)	250	Opp	49				Furnished
236XQEWX-*5 (1)	250	Opp	66				Furnished	236XQEWX-*3 (1)	250	Opp	66				Furnished
236XUEWX-*5 (1)	225	Opp	75				Furnished	236XUEWX-*3 (1)	225	Opp	75				Furnished
ONE SPEED - FORWARD & REVERSE															
340XFEWX-*5 (3)	200	Opp	33	35	7-A-140(4)	-	Furnished	340XFEWX-*5 (3)	200	Opp	33	35	7-A-140(4)	-	Furnished
352XSEWX-*5 (1)	140	Opp	71	92			Furnished	352XSEWX-*3 (1)	140	Opp	71	92			Furnished
GEARED ADAPTERS															
626XEWX-4HM	250	Eng	0				Furnished	626XEWX-3HM	250	Eng	0				Furnished
630XEWX-4HM	250	Eng	0				Furnished	630XEWX-3HM	250	Eng	0				Furnished
645XEWX-4HM	250	Eng	0				Furnished	645XEWX-3HM	250	Eng	0				Furnished

NOTE: This application is for model FS-3005A AFTER September, 1988. For applications PRIOR to September, 1988, use application no. FLR-74.

NOTE: Do not use PTOs that have a sliding Input Driver Gear (i.e. 221, 260)

(1) Input Gear Part No. 5-P-1061
(2) Input Gear Part No. 5-P-1095
(3) Input Gear Part No. 5-P-886
(4) Filler block furnished with P.T.O.

Eaton Fuller

Parker Hannifin Corporation
Chelsea Products Division
Olive Branch, MS 38654 USA

FS-4205B

LEFT SIDE ONLY

TRANSMISSION GEAR DATA:
L.S. 06-BOLT Opening Gear FORWARD of Centerline
28 Teeth - R.H. HELIX

PITCH LINE TO APERTURE FACE:
1.1469" (29.1313MM)

RIGHT SIDE ONLY

TRANSMISSION GEAR DATA:
R.S. 06-BOLT Opening Gear FORWARD of Centerline
28 Teeth - R.H. HELIX

PITCH LINE TO APERTURE FACE:
1.1469" (29.1313MM)

Caution: Application Approval Required for PTO Output Shaft Speeds Above 2500 RPM

LEFT Side PTO Model	Inter. Torq.	Dir. Rot.	Engine % Fwd.	Engine % Rev.	Filler Block	Adapter Assy.	Stud Kit	RIGHT Side PTO Model	Inter. Torq.	Dir. Rot.	Engine % Fwd.	Engine % Rev.	Filler Block	Adapter Assy.	Stud Kit
ONE SPEED - TWO GEAR - MECHANICAL SHIFT															
442XFEWX-*5 (2)	250	Opp	42				Furnished	442XFEWX-*3 (2)	250	Opp	42				Furnished
442XLEWX-*5 (1)	250	Opp	54				Furnished	442XLEWX-*3 (1)	250	Opp	54				Furnished
442XQEWX-*5 (1)	225	Opp	59				Furnished	442XQEWX-*3 (1)	225	Opp	59				Furnished
442XREWX-*5 (1)	225	Opp	68				Furnished	442XREWX-*3 (1)	225	Opp	68				Furnished
442XSEWX-*5 (1)	200	Opp	81				Furnished	442XSEWX-*3 (1)	200	Opp	81				Furnished
442XUEWX-*5 (1)	195	Opp	96				Furnished	442XUEWX-*3 (1)	195	Opp	96				Furnished
442XWEWX-*5 (1)	175	Opp	113				Furnished	442XWEWX-*3 (1)	175	Opp	113				Furnished
442XXEWX-*5 (1)	140	Opp	134				Furnished	442XXEWX-*3 (1)	140	Opp	134				Furnished
ONE SPEED - TWO GEAR - POWERSHIFT (AIR)															
236XDEWX-*5 (1)	250	Opp	44				Furnished	236XDEWX-*3 (1)	250	Opp	44				Furnished
236XKEWX-*5 (1)	250	Opp	57				Furnished	236XKEWX-*3 (1)	250	Opp	57				Furnished
236XQEWX-*5 (1)	250	Opp	76				Furnished	236XQEWX-*3 (1)	250	Opp	76				Furnished
236XUEWX-*5 (1)	225	Opp	87				Furnished	236XUEWX-*3 (1)	225	Opp	87				Furnished
ONE SPEED - FORWARD & REVERSE															
340XFEWX-*5 (3)	200	Opp	38	40	7-A-140(4) -		Furnished	340XFEWX-*5 (3)	200	Opp	38	40	7-A-140(4) -		Furnished
352XSEWX-*5 (1)	140	Opp	82	106			Furnished	352XSEWX-*3 (1)	140	Opp	82	106			Furnished
GEARED ADAPTERS															
626XEWX-4HM	250	Eng	0				Furnished	626XEWX-3HM	250	Eng	0				Furnished
630XEWX-4HM	250	Eng	0				Furnished	630XEWX-3HM	250	Eng	0				Furnished
645XEWX-4HM	250	Eng	0				Furnished	645XEWX-3HM	250	Eng	0				Furnished

NOTE: This application is for model FS-3005B AFTER September, 1988. For applications PRIOR to September, 1988, use application no. FLR-76.

(1) Input Gear Part No. 5-P-1061
(2) Input Gear Part No. 5-P-1095
(3) Input Gear Part No. 5-P-886
(4) Filler block furnished with P.T.O.

Parker Hannifin Corporation
Chelsea Products Division
Olive Branch, MS 38654 USA

ES-11109 (Left Side Forward Opening)
FS-6109A (Left Side Forward Opening)
FS-8209A (ES11109)(Left Side Forward Opening)
FS-6309A (Left Side Forward Opening)
FS-8309 (Left Side Forward Opening)
FS-6209A (Left Side Forward Opening)

LEFT FRONT SIDE ONLY

TRANSMISSION GEAR DATA:
L.F. 06-BOLT Opening Gear NON-STANDARD of Centerline
32 Teeth - R.H. HELIX

PITCH LINE TO APERTURE FACE:
2.9730" (75.5142MM)

REAR SIDE ONLY

TRANSMISSION GEAR DATA:
REAR 00-BOLT Opening

PITCH LINE TO APERTURE FACE:

Caution: Application Approval Required for PTO Output Shaft Speeds Above 2500 RPM

LEFT FRONT Side PTO Model	Inter. Torq.	Dir. Rot.	Engine % Fwd.	Engine % Rev.	Filler Block	Adapter Assy.	Stud Kit	REAR Side PTO Model	Inter. Torq.	Dir. Rot.	Engine % Fwd.	Engine % Rev.	Filler Block	Adapter Assy.	Stud Kit
ONE SPEED - TWO GEAR - MECHANICAL SHIFT															
442XFAHX-*5 (2)	250	Eng	84			329182-1X	Furnished								
442XHAHX-*5 (3)	250	Eng	97			329182-1X	Furnished								
442XLAHX-*5 (1)	250	Eng	109			329182-1X	Furnished								
442XQAHX-*5 (1)	225	Eng	118			329182-1X	Furnished								
442XRAHX-*5 (1)	225	Eng	136			329182-1X	Furnished								
442XSAHX-*5 (1)	200	Eng	162			329182-1X	Furnished								
442XUAHX-*5 (1)	195	Eng	193			329182-1X	Furnished								
442XWAHX-*5 (1)	175	Eng	228			329182-1X	Furnished								
442XXAHX-*5 (1)	140	Eng	269			329182-1X	Furnished								
660XHAHX-*5 (3)	375	Eng	97			329182-1X	Furnished								
ONE SPEED - TWO GEAR POWERSHIFT (AIR OR HYDRAULIC)															
272XAAJX-*5	300	Eng	47			329182X	Furnished								
272XBAJX-*5	300	Eng	58			329182X	Furnished								
272XCAJX-*5	300	Eng	70			329182X	Furnished								
272XDAJX-*5	300	Eng	84			329182X	Furnished								
272XGAJX-*5	300	Eng	99			329182X	Furnished								
272XKAJX-*5	300	Eng	111			329182X	Furnished								
272XMAJX-*5	300	Eng	124			329182X	Furnished								
272XPAJX-*5	300	Eng	138			329182X	Furnished								
272XSAJX-*5	300	Eng	155			329182X	Furnished								
ONE SPEED - TWO GEAR - POWERSHIFT (AIR)															
230XKAJX-*5	250	Eng	90			329182-1X	Furnished								
230XQAJX-*5	250	Eng	120			329182-1X	Furnished								
230XUAJX-*5	225	Eng	193			329182-1X	Furnished								
236XAAHX-*5 (4)	250	Eng	59			329182-1X	Furnished								
236XDAHX-*5 (1)	250	Eng	88			329182-1X	Furnished								
236XKAHX-*5 (1)	250	Eng	113			329182-1X	Furnished								
236XQAHX-*5 (1)	250	Eng	153			329182-1X	Furnished								
236XUAHX-*5 (1)	225	Eng	175			329182-1X	Furnished								

Continued Next Page

NOTE: 511/523 Rear Mounts-The adapter noted is furnished with the PTO

NOTE: There are two SAE 6 bolt pads on the left side of this transmission.

NOTE: The 230 and 442 Series will mount with the 329182-1X adapter on the front opening only. The 272 Series will mount with the 329182X adapter on the front opening only.

NOTE: 272 Series stated torque values on this page are for Intermittent and Continuous Duty Applications.

(1) Input Gear Part No. 5-P-1004
(2) Input Gear Part No. 5-P-1077
(3) Input Gear Part No. 5-P-1364
(4) Input Gear Part No. 5-P-1486

Parker Hannifin Corporation
Chelsea Products Division
Olive Branch, MS 38654 USA

ES-11109 (Left Side Forward Opening)
FS-6109A (Left Side Forward Opening)
FS-8209A (ES11109)(Left Side Forward Opening)
FS-6309A (Left Side Forward Opening)
FS-8309 (Left Side Forward Opening)
FS-6209A (Left Side Forward Opening)

LEFT FRONT SIDE ONLY

TRANSMISSION GEAR DATA:
L.F. 06-BOLT Opening Gear NON-STANDARD of Centerline
32 Teeth - R.H. HELIX

PITCH LINE TO APERTURE FACE:
2.9730" (75.5142MM)

REAR SIDE ONLY

TRANSMISSION GEAR DATA:
REAR 00-BOLT Opening

PITCH LINE TO APERTURE FACE:

Caution: Application Approval Required for PTO Output Shaft Speeds Above 2500 RPM

LEFT FRONT Side PTO Model	Inter. Torq.	Dir. Rot.	Engine % Fwd.	Engine % Rev.	Filler Block	Adapter Assy.	Stud Kit	REAR Side PTO Model	Inter. Torq.	Dir. Rot.	Engine % Fwd.	Engine % Rev.	Filler Block	Adapter Assy.	Stud Kit
REAR MOUNT & THRUSHAFT															
								523XTARX-*-*	258	Eng	106			329733X	Furnished
								523XVARX-*-*	258	Eng	126			329733X	Furnished

NOTE: 511/523 Rear Mounts-The adapter noted is furnished with the PTO

NOTE: There are two SAE 6 bolt pads on the left side of this transmission.

NOTE: The 230 and 442 Series will mount with the 329182-1X adapter on the front opening only. The 272 Series will mount with the 329182X adapter on the front opening only.

NOTE: 272 Series stated torque values on this page are for Intermittent and Continuous Duty Applications.

Parker Hannifin Corporation
Chelsea Products Division
Olive Branch, MS 38654 USA

FRO-11210C
FRO-12210C
FRO-13210C
FRO-14210C
FRO-15210C
FRO-16210C
FRO-16210R
FRO-17210C
FRO-18210C
FROF-15210C

BOTTOM SIDE ONLY

TRANSMISSION GEAR DATA:
BOT 08-BOLT Opening Gear FORWARD of Centerline
47 Teeth - SPUR

PITCH LINE TO APERTURE FACE:
0.8050" (20.4470MM)

RIGHT SIDE ONLY

TRANSMISSION GEAR DATA:
R.S. 06-BOLT Opening Gear FORWARD of Centerline
45 Teeth - SPUR

PITCH LINE TO APERTURE FACE:
1.0850" (27.5600MM)

Caution: Application Approval Required for PTO Output Shaft Speeds Above 2500 RPM

ONE SPEED - TWO GEAR - MECHANICAL SHIFT

BOTTOM Side PTO Model	Inter. Torq.	Dir. Rot.	Engine % Fwd.	Engine % Rev.	Filler Block	Adapter Assy.	Stud Kit	RIGHT Side PTO Model	Inter. Torq.	Dir. Rot.	Engine % Fwd.	Engine % Rev.	Filler Block	Adapter Assy.	Stud Kit
489GAAHX-*5 (12)	250	Opp	64				Furnished	442GAAHX-*3 (12)	250	Opp	62				Furnished
489GCAHX-*5 (13)	250	Opp	82				Furnished	442GCAHX-*3 (13)	250	Opp	79				Furnished
489GFAHX-*5 (2)	250	Opp	102				Furnished	442GFAHX-*3 (2)	250	Opp	97				Furnished
489GHAHX-*5 (15)	250	Opp	118				Furnished	442GHAHX-*3 (15)	250	Opp	112				Furnished
489GLAHX-*5 (1)	250	Opp	132				Furnished	442GLAHX-*3 (1)	250	Opp	126				Furnished
489GQAHX-*5 (1)	225	Opp	142				Furnished	442GQAHX-*3 (1)	225	Opp	136				Furnished
489GRAHX-*5 (1)	225	Opp	164				Furnished	442GRAHX-*3 (1)	225	Opp	157				Furnished
489GSAHX-*5 (1)	200	Opp	195				Furnished	442GSAHX-*3 (1)	200	Opp	187				Furnished
489GUAHX-*5 (1)	195	Opp	233				Furnished	660GFAHX-*3 (10)	375	Opp	97				Furnished
489GWAHX-*5 (1)	175	Opp	274				Furnished	660GHAHX-*3 (15)	375	Opp	112				Furnished
680GFAHX-*3 (10)	375	Opp	102				Furnished	660GQAHX-*3 (11)	375	Opp	136				Furnished
680GHAHX-*3 (19)	375	Opp	118				Furnished	660GRAHX-*3 (18)	350	Opp	157				Furnished
680GQAHX-*3 (11)	375	Opp	142				Furnished	660GSAHX-*3 (14)	336	Opp	187				Furnished
680GRAHX-*3 (18)	350	Opp	164				Furnished								
680GSAHX-*3 (14)	322	Opp	195				Furnished								
823GBAHX-*3 (21)	750	Opp	69				Furnished								
823GDAHX-*3 (25)	750	Opp	82				Furnished								
823GGAHX-*3 (26)	705	Opp	89				Furnished								
823GJAHX-*3 (22)	599	Opp	105				Furnished								
823GMAHX-*3 (20)	511	Opp	123				Furnished								
823GRAHX-*3 (24)	370	Opp	170				Furnished								
823GTKTX-*3 (17)	305	Opp	206		8-A-165(27)		Furnished								
880GBAHX-*3 (3)	500	Opp	69				Furnished								
880GDAHX-*3 (4)	500	Opp	82				Furnished								
880GGAHX-*3 (9)	500	Opp	89				Furnished								
880GJAHX-*3 (5)	500	Opp	105				Furnished								
880GMAHX-*3 (6)	500	Opp	123				Furnished								
880GQAHX-*3 (16)	435	Opp	144				Furnished								
880GRAHX-*3 (7)	370	Opp	170				Furnished								
880GTAHX-*3 (8)	287	Opp	219				Furnished								

Continued Next Page

CAUTION: Eaton Transmission Division has established a MAXIMUM torque limit for the Transmission PTO driver gear. For all FR, FRO & FRLO transmissions the MAXIMUM torque limit for the transmission PTO driver gear is 750 Ft-lbs [1017 N.m]. All torque limits on this application page reflect the 750 Ft-lbs [1017 N.m] limit at the Transmission PTO driver gear. Refer to the Chelsea PTO Torque Limit Chart in the front of this section for complete torque limit information.

CAUTION: Do not use geared adapters with 442 "A" and "C" ratios.

CAUTION: 660/680 Series: Applications above 1500 RPM output shaft speed, contact Chelsea Technical Service for approval. DO NOT use Standard Geared Adapters w/660 Series, contact Chelsea Technical Service.

NOTE: The 442 "U","W" and "X" ratios will not mount on the right side and the 489 "X" ratio will not mount on the bottom opening because the O.D. of the ratio gear hits the O.D. of the adjacent gear in the transmission.

NOTE: 328564G comes with a metric stud kit. The PTO must be fastened to the adapter plate with the standard stud kit that comes with the PTO.

(1) Input Gear Part No. 5-P-1004
(2) Input Gear Part No. 5-P-1077
(3) Input Gear Part No. 5-P-1100
(4) Input Gear Part No. 5-P-1101
(5) Input Gear Part No. 5-P-1102
(6) Input Gear Part No. 5-P-1103
(7) Input Gear Part No. 5-P-1104
(8) Input Gear Part No. 5-P-1105
(9) Input Gear Part No. 5-P-1135
(10) Input Gear Part No. 5-P-1242
(11) Input Gear Part No. 5-P-1246
(12) Input Gear Part No. 5-P-1280
(13) Input Gear Part No. 5-P-1287
(14) Input Gear Part No. 5-P-1322
(15) Input Gear Part No. 5-P-1364
(16) Input Gear Part No. 5-P-1385
(17) Input Gear Part No. 5-P-1395
(18) Input Gear Part No. 5-P-1441
(19) Input Gear Part No. 5-P-1494
(20) Input Gear Part No. 5-P-283
(21) Input Gear Part No. 5-P-285
(22) Input Gear Part No. 5-P-325
(24) Input Gear Part No. 5-P-721
(25) Input Gear Part No. 5-P-971
(26) Input Gear Part No. 5-P-980
(27) Filler block furnished with P.T.O.

Parker Hannifin Corporation
Chelsea Products Division
Olive Branch, MS 38654 USA

FRO-11210C
FRO-12210C
FRO-13210C
FRO-14210C
FRO-15210C
FRO-16210C
FRO-16210R
FRO-17210C
FRO-18210C
FROF-15210C

BOTTOM SIDE ONLY

TRANSMISSION GEAR DATA:
BOT 08-BOLT Opening Gear FORWARD of Centerline
47 Teeth - SPUR

PITCH LINE TO APERTURE FACE:
0.8050" (20.4470MM)

RIGHT SIDE ONLY

TRANSMISSION GEAR DATA:
R.S. 06-BOLT Opening Gear FORWARD of Centerline
45 Teeth - SPUR

PITCH LINE TO APERTURE FACE:
1.0850" (27.5600MM)

Caution: Application Approval Required for PTO Output Shaft Speeds Above 2500 RPM

BOTTOM Side PTO Model	Inter. Torq.	Dir. Rot.	Engine % Fwd.	Engine % Rev.	Filler Block	Adapter Assy.	Stud Kit	RIGHT Side PTO Model	Inter. Torq.	Dir. Rot.	Engine % Fwd.	Engine % Rev.	Filler Block	Adapter Assy.	Stud Kit
ONE SPEED - TWO GEAR POWERSHIFT (AIR OR HYDRAULIC)															
282GBAJX-*3	300	Opp	69				Furnished	272GAAJX-*3	300	Opp	54				Furnished
282GCAJX-*3	300	Opp	83				Furnished	272GBAJX-*3	300	Opp	67				Furnished
282GDAJX-*3	300	Opp	100				Furnished	272GCAJX-*3	300	Opp	81				Furnished
282GGAJX-*3	300	Opp	119				Furnished	272GDAJX-*3	300	Opp	97				Furnished
282GKAJX-*3	300	Opp	133				Furnished	272GGAJX-*3	300	Opp	115				Furnished
282GMAJX-*3	300	Opp	148				Furnished	272GKAJX-*3	300	Opp	128				Furnished
282GPAJX-*3	300	Opp	166				Furnished	272GMAJX-*3	300	Opp	143				Furnished
282GSAJX-*3	300	Opp	185				Furnished	272GPAJX-*3	300	Opp	160				Furnished
282GTAJX-*3	300	Opp	208				Furnished	272GSAJX-*3	300	Opp	179				Furnished
ONE SPEED - TWO GEAR - POWERSHIFT (AIR)															
885GBAHX-*3 (3)	500	Opp	69				Furnished								
885GGAHX-*3 (9)	500	Opp	89				Furnished								
885GJAHX-*3 (5)	500	Opp	105				Furnished								
885GMAHX-*3 (6)	500	Opp	123				Furnished								
ONE SPEED - FORWARD & REVERSE															
348GFAHX-*5 (23)	200	Opp	89	93			Furnished	340GFAHX-*5 (23)	200	Opp	85	89	7-A-140(27)		Furnished
352ZSAHX-*3 (1)	140	Opp	198	256		328564G	Furnished	352GSAHX-*3 (1)	140	Opp	189	245			Furnished
863GBAHX-*5	500	Opp	69	86			Furnished								
GEARED ADAPTERS															
628GAHX-3AH	250	Eng	0				Furnished	626GAHX-3AH	250	Eng	0				Furnished
								630GAHX-3AH	250	Eng	0				Furnished
								645GAHX-3AH	250	Eng	0				Furnished

Continued Next Page

CAUTION: Eaton Transmission Division has established a MAXIMUM torque limit for the Transmission PTO driver gear. For all FR, FRO & FRLO transmissions the MAXIMUM torque limit for the transmission PTO driver gear is 750 Ft-lbs [1017 N.m]. All torque limits on this application page reflect the 750 Ft-lbs [1017 N.m] limit at the Transmission PTO driver gear. Refer to the Chelsea PTO Torque Limit Chart in the front of this section for complete torque limit information.

CAUTION: Do not use geared adapters with 442 "A" and "C" ratios.

CAUTION: 660/680 Series: Applications above 1500 RPM output shaft speed, contact Chelsea Technical Service for approval. DO NOT use Standard Geared Adapters w/660 Series, contact Chelsea Technical Service.

NOTE: The 442 "U","W" and "X" ratios will not mount on the right side and the 489 "X" ratio will not mount on the bottom opening because the O.D. of the ratio gear hits the O.D. of the adjacent gear in the transmission.

NOTE: 328564G comes with a metric stud kit. The PTO must be fastened to the adapter plate with the standard stud kit that comes with the PTO.

(1) Input Gear Part No. 5-P-1004
(3) Input Gear Part No. 5-P-1100
(5) Input Gear Part No. 5-P-1102
(6) Input Gear Part No. 5-P-1103
(9) Input Gear Part No. 5-P-1135
(23) Input Gear Part No. 5-P-581
(27) Filler block furnished with P.T.O.

Parker Hannifin Corporation
Chelsea Products Division
Olive Branch, MS 38654 USA

FRO-11210C
FRO-12210C
FRO-13210C
FRO-14210C
FRO-15210C
FRO-16210C
FRO-16210R
FRO-17210C
FRO-18210C
FROF-15210C

REAR SIDE ONLY

TRANSMISSION GEAR DATA:
REAR 00-BOLT Opening

PITCH LINE TO APERTURE FACE:

Caution: Application Approval Required for PTO Output Shaft Speeds Above 2500 RPM

REAR Side PTO Model	Inter. Torq.	Dir. Rot.	Engine %		Filler Block	Adapter Assy.	Stud Kit		Inter. Torq.	Dir. Rot.	Engine %		Filler Block	Adapter Assy.	Stud Kit
			Fwd.	Rev.							Fwd.	Rev.			

REAR MOUNT - MECHANICAL SHIFT (10 SPEED TRANSMISSIONS)

541-LBJ-*-*	400	Eng	81		Furnished										
541-MBJ-*-*	350	Eng	113		Furnished										
541-NBJ-*-*	300	Eng	129		Furnished										

CAUTION: Eaton Transmission Division has established a MAXIMUM torque limit for the Transmission PTO driver gear. For all FR, FRO & FRLO transmissions the MAXIMUM torque limit for the transmission PTO driver gear is 750 Ft-lbs [1017 N.m]. All torque limits on this application page reflect the 750 Ft-lbs [1017 N.m] limit at the Transmission PTO driver gear. Refer to the Chelsea PTO Torque Limit Chart in the front of this section for complete torque limit information.

CAUTION: Do not use geared adapters with 442 "A" and "C" ratios.

CAUTION: 660/680 Series: Applications above 1500 RPM output shaft speed, contact Chelsea Technical Service for approval. DO NOT use Standard Geared Adapters w/660 Series, contact Chelsea Technical Service.

NOTE: The 442 "U","W" and "X" ratios will not mount on the right side and the 489 "X" ratio will not mount on the bottom opening because the O.D. of the ratio gear hits the O.D. of the adjacent gear in the transmission.

NOTE: 328564G comes with a metric stud kit. The PTO must be fastened to the adapter plate with the standard stud kit that comes with the PTO.

Parker Hannifin Corporation
Chelsea Products Division
Olive Branch, MS 38654 USA

FR-11210B
FR-12210B
FR-13210B
FR-14210B
FR-15210B
FR-9210
FR-9210B
FRF-9210B

FRM-15210B (Thrushaft use BJ mounting)
FRW-15210B

BOTTOM SIDE ONLY

TRANSMISSION GEAR DATA:
BOT 08-BOLT Opening Gear FORWARD of Centerline
47 Teeth - SPUR

PITCH LINE TO APERTURE FACE:
0.8050" (20.4470MM)

RIGHT SIDE ONLY

TRANSMISSION GEAR DATA:
R.S. 06-BOLT Opening Gear FORWARD of Centerline
45 Teeth - SPUR

PITCH LINE TO APERTURE FACE:
1.0850" (27.5600MM)

Caution: Application Approval Required for PTO Output Shaft Speeds Above 2500 RPM

BOTTOM Side PTO Model	Inter. Torq.	Dir. Rot.	Engine % Fwd.	Engine % Rev.	Filler Block	Adapter Assy.	Stud Kit	RIGHT Side PTO Model	Inter. Torq.	Dir. Rot.	Engine % Fwd.	Engine % Rev.	Filler Block	Adapter Assy.	Stud Kit
ONE SPEED - TWO GEAR - MECHANICAL SHIFT															
221ZCAHX-*3	250	Opp	57		7-A-032(30)	328564G	Furnished	442GAAHX-*3 (12)	250	Opp	48				Furnished
221ZEAHX-*3	250	Opp	65			328564G	Furnished	442GCAHX-*3 (13)	250	Opp	61				Furnished
221ZLAHX-*3	200	Opp	88			328564G	Furnished	442GFAHX-*3 (2)	250	Opp	75				Furnished
221ZPAHX-*3	200	Opp	106			328564G	Furnished	442GHAHX-*3 (15)	250	Opp	87				Furnished
489GAAHX-*5 (12)	250	Eng	50				Furnished	442GLAHX-*3 (1)	250	Opp	97				Furnished
489GCAHX-*5 (13)	250	Eng	64				Furnished	442GQAHX-*3 (1)	225	Opp	105				Furnished
489GFAHX-*5 (2)	250	Opp	79				Furnished	442GRAHX-*3 (1)	225	Opp	121				Furnished
489GHAHX-*5 (15)	250	Opp	92				Furnished	442GSAHX-*3 (1)	200	Opp	145				Furnished
489GLAHX-*5 (1)	250	Opp	102				Furnished	442GUAHX-*3 (1)	195	Opp	171				Furnished
489GQAHX-*5 (1)	225	Opp	110				Furnished	442GWAHX-*3 (1)	175	Opp	208				Furnished
489GRAHX-*5 (1)	225	Opp	127				Furnished	442GXAHX-*3 (1)	140	Opp	242				Furnished
489GSAHX-*5 (1)	200	Opp	151				Furnished	660GFAHX-*3 (10)	375	Opp	75				Furnished
489GUAHX-*5 (1)	195	Opp	180				Furnished	660GHAHX-*3 (15)	375	Opp	87				Furnished
489GWAHX-*5 (1)	175	Opp	212				Furnished	660GQAHX-*3 (11)	375	Opp	105				Furnished
680GFAHX-*3 (10)	375	Opp	79				Furnished	660GRAHX-*3 (18)	350	Opp	121				Furnished
680GHAHX-*3 (19)	375	Opp	92				Furnished	660GSAHX-*3 (14)	336	Opp	145				Furnished
680GQAHX-*3 (11)	375	Opp	110				Furnished								
680GRAHX-*3 (18)	350	Opp	127				Furnished								
680GSAHX-*3 (14)	322	Opp	151				Furnished								
823GBAHX-*3 (21)	750	Opp	53				Furnished								
823GDAHX-*3 (28)	750	Opp	63				Furnished								
823GGAHX-*3 (29)	705	Opp	69				Furnished								
823GJAHX-*3 (22)	599	Opp	81				Furnished								
823GMAHX-*3 (20)	511	Opp	95				Furnished								
823GRAHX-*3 (27)	370	Opp	131				Furnished								
823GTKTX-*3 (17)	305	Opp	159		8-A-165(30)		Furnished								
880GBAHX-*3 (3)	500	Opp	54				Furnished								
880GDAHX-*3 (4)	500	Opp	63				Furnished								
880GGAHX-*3 (9)	500	Opp	69				Furnished								
880GJAHX-*3 (5)	500	Opp	81				Furnished								
880GMAHX-*3 (6)	500	Opp	95				Furnished								
880GQAHX-*3 (16)	435	Opp	111				Furnished								

Continued Next Page

CAUTION: Eaton Transmission Division has established a MAXIMUM torque limit for the Transmission PTO driver gear. For all FR, FRO & FRLO transmissions the MAXIMUM torque limit for the transmission PTO driver gear is 750 Ft-lbs [1017 N.m]. All torque limits on this application page reflect the 750 Ft-lbs [1017 N.m] limit at the Transmission PTO driver gear. Refer to the Chelsea PTO Torque Limit Chart in the front of this section for complete torque limit information.

CAUTION: Do not use geared adapters with 442 "A" and "C" ratios.

CAUTION: 660/680 Series: Applications above 1500 RPM output shaft speed, contact Chelsea Technical Service for approval. DO NOT use Standard Geared Adapters w/660 Series, contact Chelsea Technical Service.

NOTE: The new Fuller C2000 Series (FR Series) transmissions have M10-1.5 threads for the 6 bolt opening and M12-1.75 threads for the 8 bolt opening.

(1) Input Gear Part No. 5-P-1004
(2) Input Gear Part No. 5-P-1077
(3) Input Gear Part No. 5-P-1100
(4) Input Gear Part No. 5-P-1101
(5) Input Gear Part No. 5-P-1102
(6) Input Gear Part No. 5-P-1103
(9) Input Gear Part No. 5-P-1135
(10) Input Gear Part No. 5-P-1242
(11) Input Gear Part No. 5-P-1246
(12) Input Gear Part No. 5-P-1280
(13) Input Gear Part No. 5-P-1287
(14) Input Gear Part No. 5-P-1322
(15) Input Gear Part No. 5-P-1364
(16) Input Gear Part No. 5-P-1385
(17) Input Gear Part No. 5-P-1395
(18) Input Gear Part No. 5-P-1441
(19) Input Gear Part No. 5-P-1494
(20) Input Gear Part No. 5-P-283
(21) Input Gear Part No. 5-P-285
(22) Input Gear Part No. 5-P-325
(27) Input Gear Part No. 5-P-721
(28) Input Gear Part No. 5-P-971
(29) Input Gear Part No. 5-P-980
(30) Filler block furnished with P.T.O.

Parker Hannifin Corporation
Chelsea Products Division
Olive Branch, MS 38654 USA

FR-11210B
FR-12210B
FR-13210B
FR-14210B
FR-15210B
FR-9210
FR-9210B
FRF-9210B

FRM-15210B (Thrushaft use BJ mounting)
FRW-15210B

BOTTOM SIDE ONLY

TRANSMISSION GEAR DATA:
BOT 08-BOLT Opening Gear FORWARD of Centerline
47 Teeth - SPUR

PITCH LINE TO APERTURE FACE:
0.8050" (20.4470MM)

RIGHT SIDE ONLY

TRANSMISSION GEAR DATA:
R.S. 06-BOLT Opening Gear FORWARD of Centerline
45 Teeth - SPUR

PITCH LINE TO APERTURE FACE:
1.0850" (27.5600MM)

Caution: Application Approval Required for PTO Output Shaft Speeds Above 2500 RPM

BOTTOM Side PTO Model	Inter. Torq.	Dir. Rot.	Engine % Fwd.	Engine % Rev.	Filler Block	Adapter Assy.	Stud Kit	RIGHT Side PTO Model	Inter. Torq.	Dir. Rot.	Engine % Fwd.	Engine % Rev.	Filler Block	Adapter Assy.	Stud Kit
ONE SPEED - TWO GEAR - MECHANICAL SHIFT															
880GRAHX-*3 (7)	370	Opp	131				Furnished								
880GTAHX-*3 (8)	287	Opp	169				Furnished								
ONE SPEED - TWO GEAR POWERSHIFT (AIR OR HYDRAULIC)															
282GBAJX-*3	300	Opp	54				Furnished	272GAAJX-*3	300	Opp	42				Furnished
282GCAJX-*3	300	Opp	65				Furnished	272GBAJX-*3	300	Opp	51				Furnished
282GDAJX-*3	300	Opp	78				Furnished	272GCAJX-*3	300	Opp	62				Furnished
282GGAJX-*3	300	Opp	92				Furnished	272GDAJX-*3	300	Opp	74				Furnished
282GKAJX-*3	300	Opp	103				Furnished	272GGAJX-*3	300	Opp	88				Furnished
282GMAJX-*3	300	Opp	115				Furnished	272GKAJX-*3	300	Opp	99				Furnished
282GPAJX-*3	300	Opp	129				Furnished	272GMAJX-*3	300	Opp	110				Furnished
282GSAJX-*3	300	Opp	144				Furnished	272GPAJX-*3	300	Opp	123				Furnished
282GTAJX-*3	300	Opp	161				Furnished	272GSAJX-*3	300	Opp	138				Furnished
ONE SPEED - TWO GEAR - POWERSHIFT (AIR)															
885GBAHX-*3 (3)	500	Opp	54				Furnished								
885GGAHX-*3 (9)	500	Opp	69				Furnished								
885GJAHX-*3 (5)	500	Opp	81				Furnished								
885GMAHX-*3 (6)	500	Opp	95				Furnished								
ONE SPEED - FORWARD & REVERSE															
348GFAHX-*5 (23)	200	Opp	69	72			Furnished	340GFAHX-*5 (23)	200	Opp	66	69	7-A-140(30)		Furnished
352ZSAHX-*3 (1)	140	Opp	153	198		328564G	Furnished	352GSAHX-*3 (1)	140	Opp	146	190			Furnished
863GBAHX-*5	500	Opp	54	66			Furnished								
GEARED ADAPTERS															
628GAHX-3AH	250	Eng	0				Furnished	626GAHX-3AH	250	Eng	0				Furnished
								630GAHX-3AH	250	Eng	0				Furnished
								645GAHX-3AH	250	Eng	0				Furnished

Continued Next Page

CAUTION: Eaton Transmission Division has established a MAXIMUM torque limit for the Transmission PTO driver gear. For all FR, FRO & FRLO transmissions the MAXIMUM torque limit for the transmission PTO driver gear is 750 Ft-lbs [1017 N.m]. All torque limits on this application page reflect the 750 Ft-lbs [1017 N.m] limit at the Transmission PTO driver gear. Refer to the Chelsea PTO Torque Limit Chart in the front of this section for complete torque limit information.

CAUTION: Do not use geared adapters with 442 "A" and "C" ratios.

CAUTION: 660/680 Series: Applications above 1500 RPM output shaft speed, contact Chelsea Technical Service for approval. DO NOT use Standard Geared Adapters w/660 Series, contact Chelsea Technical Service.

NOTE: The new Fuller C2000 Series (FR Series) transmissions have M10-1.5 threads for the 6 bolt opening and M12-1.75 threads for the 8 bolt opening.

(1) Input Gear Part No. 5-P-1004
(3) Input Gear Part No. 5-P-1100
(5) Input Gear Part No. 5-P-1102
(6) Input Gear Part No. 5-P-1103
(7) Input Gear Part No. 5-P-1104
(8) Input Gear Part No. 5-P-1105
(9) Input Gear Part No. 5-P-1135
(23) Input Gear Part No. 5-P-581
(30) Filler block furnished with P.T.O.

Parker Hannifin Corporation
Chelsea Products Division
Olive Branch, MS 38654 USA

FR-11210B
FR-12210B
FR-13210B
FR-14210B
FR-15210B
FR-9210
FR-9210B
FRF-9210B

FRM-15210B (Thrushaft use BJ mounting)
FRW-15210B

REAR SIDE ONLY

TRANSMISSION GEAR DATA:
REAR 00-BOLT Opening

PITCH LINE TO APERTURE FACE:

Caution: Application Approval Required for PTO Output Shaft Speeds Above 2500 RPM

REAR Side PTO Model	Inter. Torq.	Dir. Rot.	Engine %		Filler Block	Adapter Assy.	Stud Kit		Inter. Torq.	Dir. Rot.	Engine %		Filler Block	Adapter Assy.	Stud Kit
			Fwd.	Rev.							Fwd.	Rev.			
REAR MOUNT - MECHANICAL SHIFT (10 SPEED TRANSMISSIONS)															
541-LBJ-*-* (26)	400	Eng	63				Furnished								
541-MBJ-*-* (25)	350	Eng	81				Furnished								
541-NBJ-*-* (24)	300	Eng	92				Furnished								

CAUTION: Eaton Transmission Division has established a MAXIMUM torque limit for the Transmission PTO driver gear. For all FR, FRO & FRLO transmissions the MAXIMUM torque limit for the transmission PTO driver gear is 750 Ft-lbs [1017 N.m]. All torque limits on this application page reflect the 750 Ft-lbs [1017 N.m] limit at the Transmission PTO driver gear. Refer to the Chelsea PTO Torque Limit Chart in the front of this section for complete torque limit information.

CAUTION: Do not use geared adapters with 442 "A" and "C" ratios.

CAUTION: 660/680 Series: Applications above 1500 RPM output shaft speed, contact Chelsea Technical Service for approval. DO NOT use Standard Geared Adapters w/660 Series, contact Chelsea Technical Service.

NOTE: The new Fuller C2000 Series (FR Series) transmissions have M10-1.5 threads for the 6 bolt opening and M12-1.75 threads for the 8 bolt opening.

(24) Input Gear Part No. 5-P-716
(25) Input Gear Part No. 5-P-717
(26) Input Gear Part No. 5-P-718

Parker Hannifin Corporation
Chelsea Products Division
Olive Branch, MS 38654 USA

FRO-11210B
FRO-12210B
FRO-13210B
FRO-14210B
FRO-15210B
FRO-16210B

BOTTOM SIDE ONLY

TRANSMISSION GEAR DATA:
BOT 08-BOLT Opening Gear FORWARD of Centerline
47 Teeth - SPUR

PITCH LINE TO APERTURE FACE:
0.8050" (20.4470MM)

RIGHT SIDE ONLY

TRANSMISSION GEAR DATA:
R.S. 06-BOLT Opening Gear FORWARD of Centerline
45 Teeth - SPUR

PITCH LINE TO APERTURE FACE:
1.0850" (27.5590MM)

Caution: Application Approval Required for PTO Output Shaft Speeds Above 2500 RPM

BOTTOM Side PTO Model	Inter. Torq.	Dir. Rot.	Engine % Fwd.	Engine % Rev.	Filler Block	Adapter Assy.	Stud Kit	RIGHT Side PTO Model	Inter. Torq.	Dir. Rot.	Engine % Fwd.	Engine % Rev.	Filler Block	Adapter Assy.	Stud Kit
ONE SPEED - TWO GEAR - MECHANICAL SHIFT															
221ZCAHX-*3	250	Opp	76		7-A-032(31)	328564G	Furnished	442GAAHX-*3 (12)	250	Opp	64				Furnished
221ZEAHX-*3	250	Opp	87			328564G	Furnished	442GCAHX-*3 (13)	250	Opp	81				Furnished
221ZLAHX-*3	200	Opp	117			328564G	Furnished	442GFAHX-*3 (2)	250	Opp	101				Furnished
221ZPAHX-*3	200	Opp	142			328564G	Furnished	442GHAHX-*3 (15)	250	Opp	117				Furnished
489GAAHX-*5 (12)	250	Opp	66				Furnished	442GLAHX-*3 (1)	250	Opp	130				Furnished
489GCAHX-*5 (13)	250	Opp	85				Furnished	442GQAHX-*3 (1)	225	Opp	140				Furnished
489GFAHX-*5 (2)	250	Opp	105				Furnished	442GRAHX-*3 (1)	225	Opp	162				Furnished
489GHAHX-*5 (15)	250	Opp	122				Furnished	442GSAHX-*3 (1)	200	Opp	193				Furnished
489GLAHX-*5 (1)	250	Opp	136				Furnished	660GFAHX-*3 (10)	375	Opp	101				Furnished
489GQAHX-*5 (1)	225	Opp	146				Furnished	660GHAHX-*3 (15)	375	Opp	117				Furnished
489GRAHX-*5 (1)	225	Opp	170				Furnished	660GQAHX-*3 (11)	375	Opp	140				Furnished
489GSAHX-*5 (1)	200	Opp	202				Furnished	660GRAHX-*3 (18)	350	Opp	162				Furnished
489GUAHX-*5 (1)	195	Opp	241				Furnished	660GSAHX-*3 (14)	336	Opp	193				Furnished
489GWAHX-*5 (1)	175	Opp	283				Furnished								
680GFAHX-*3 (10)	375	Opp	105				Furnished								
680GHAHX-*3 (19)	375	Opp	122				Furnished								
680GQAHX-*3 (11)	375	Opp	146				Furnished								
680GRAHX-*3 (18)	350	Opp	170				Furnished								
680GSAHX-*3 (14)	322	Opp	202				Furnished								
823GBAHX-*3 (21)	750	Opp	71				Furnished								
823GDAHX-*3 (28)	750	Opp	85				Furnished								
823GGAHX-*3 (29)	705	Opp	92				Furnished								
823GJAHX-*3 (22)	599	Opp	108				Furnished								
823GMAHX-*3 (20)	511	Opp	127				Furnished								
823GRAHX-*3 (27)	370	Opp	176				Furnished								
823GTKTX-*3 (17)	305	Opp	213		8-A-165(30)		Furnished								
880GBAHX-*3 (3)	500	Opp	72				Furnished								
880GDAHX-*3 (4)	500	Opp	85				Furnished								
880GGAHX-*3 (9)	500	Opp	92				Furnished								
880GJAHX-*3 (5)	500	Opp	108				Furnished								
880GMAHX-*3 (6)	500	Opp	127				Furnished								
880GQAHX-*3 (16)	435	Opp	149				Furnished								

Continued Next Page

CAUTION: Eaton Transmission Division has established a MAXIMUM torque limit for the Transmission PTO driver gear. For all FR, FRO & FRLO transmissions the MAXIMUM torque limit for the transmission PTO driver gear is 750 Ft-lbs [1017 N.m]. All torque limits on this application page reflect the 750 Ft-lbs [1017 N.m] limit at the Transmission PTO driver gear. Refer to the Chelsea PTO Torque Limit Chart in the front of this section for complete torque limit information.

CAUTION: 660/680 Series: Applications above 1500 RPM output shaft speed, contact Chelsea Technical Service for approval. DO NOT use Standard Geared Adapters w/660 Series, contact Chelsea Technical Service.

CAUTION: Do not use geared adapters with 442 "A" and "C" ratios.

NOTE: The new Fuller C2000 Series (FR Series) transmissions have M10-1.5 threads for the 6 bolt opening and M12-1.75 threads for the 8 bolt opening.

(1) Input Gear Part No. 5-P-1004
(2) Input Gear Part No. 5-P-1077
(3) Input Gear Part No. 5-P-1100
(4) Input Gear Part No. 5-P-1101
(5) Input Gear Part No. 5-P-1102
(6) Input Gear Part No. 5-P-1103
(9) Input Gear Part No. 5-P-1135
(10) Input Gear Part No. 5-P-1242
(11) Input Gear Part No. 5-P-1246
(12) Input Gear Part No. 5-P-1280
(13) Input Gear Part No. 5-P-1287
(14) Input Gear Part No. 5-P-1322
(15) Input Gear Part No. 5-P-1364
(16) Input Gear Part No. 5-P-1385
(17) Input Gear Part No. 5-P-1395
(18) Input Gear Part No. 5-P-1441
(19) Input Gear Part No. 5-P-1494
(20) Input Gear Part No. 5-P-283
(21) Input Gear Part No. 5-P-285
(22) Input Gear Part No. 5-P-325
(27) Input Gear Part No. 5-P-721
(28) Input Gear Part No. 5-P-971
(29) Input Gear Part No. 5-P-980
(30) Filler block furnished with P.T.O.
(31) Filler block furnished with P.T.O. but not required

Parker Hannifin Corporation
Chelsea Products Division
Olive Branch, MS 38654 USA

FRO-11210B
FRO-12210B
FRO-13210B
FRO-14210B
FRO-15210B
FRO-16210B

BOTTOM SIDE ONLY

TRANSMISSION GEAR DATA:
BOT 08-BOLT Opening Gear FORWARD of Centerline
47 Teeth - SPUR

PITCH LINE TO APERTURE FACE:
0.8050" (20.4470MM)

RIGHT SIDE ONLY

TRANSMISSION GEAR DATA:
R.S. 06-BOLT Opening Gear FORWARD of Centerline
45 Teeth - SPUR

PITCH LINE TO APERTURE FACE:
1.0850" (27.5590MM)

Caution: Application Approval Required for PTO Output Shaft Speeds Above 2500 RPM

BOTTOM Side PTO Model	Inter. Torq.	Dir. Rot.	Engine % Fwd.	Engine % Rev.	Filler Block	Adapter Assy.	Stud Kit	RIGHT Side PTO Model	Inter. Torq.	Dir. Rot.	Engine % Fwd.	Engine % Rev.	Filler Block	Adapter Assy.	Stud Kit
ONE SPEED - TWO GEAR - MECHANICAL SHIFT															
880GRAHX-*3 (7)	370	Opp	176				Furnished								
880GTAHX-*3 (8)	287	Opp	226				Furnished								
ONE SPEED - TWO GEAR POWERSHIFT (AIR OR HYDRAULIC)															
282GBAJX-*3	300	Opp	72				Furnished	272GAAJX-*3	300	Opp	56				Furnished
282GCAJX-*3	300	Opp	87				Furnished	272GBAJX-*3	300	Opp	69				Furnished
282GDAJX-*3	300	Opp	104				Furnished	272GCAJX-*3	300	Opp	83				Furnished
282GGAJX-*3	300	Opp	123				Furnished	272GDAJX-*3	300	Opp	99				Furnished
282GKAJX-*3	300	Opp	138				Furnished	272GGAJX-*3	300	Opp	118				Furnished
282GMAJX-*3	300	Opp	154				Furnished	272GKAJX-*3	300	Opp	132				Furnished
282GPAJX-*3	300	Opp	172				Furnished	272GMAJX-*3	300	Opp	148				Furnished
282GSAJX-*3	300	Opp	193				Furnished	272GPAJX-*3	300	Opp	165				Furnished
282GTAJX-*3	300	Opp	215				Furnished	272GSAJX-*3	300	Opp	184				Furnished
ONE SPEED - TWO GEAR - POWERSHIFT (AIR)															
885GBAHX-*3 (3)	500	Opp	72				Furnished								
885GGAHX-*3 (9)	500	Opp	92				Furnished								
885GJAHX-*3 (5)	500	Opp	108				Furnished								
885GMAHX-*3 (6)	500	Opp	127				Furnished								
ONE SPEED - FORWARD & REVERSE															
348GFAHX-*5 (23)	200	Opp	92	96			Furnished	340GFAHX-*5 (23)	200	Opp	88	92	7-A-140(31)		Furnished
352ZSAHX-*3 (1)	140	Opp	204	265		328564G	Furnished	352GSAHX-*3 (1)	140	Opp	196	253			Furnished
863GBAHX-*5	500	Opp	72	89			Furnished								
GEARED ADAPTERS															
628GAHX-3AH	250	Eng	0				Furnished	626GAHX-3AH	250	Eng	0				Furnished
								630GAHX-3AH	250	Eng	0				Furnished
								645GAHX-3AH	250	Eng	0				Furnished

Continued Next Page

CAUTION: Eaton Transmission Division has established a MAXIMUM torque limit for the Transmission PTO driver gear. For all FR, FRO & FRLO transmissions the MAXIMUM torque limit for the transmission PTO driver gear is 750 Ft-lbs [1017 N.m]. All torque limits on this application page reflect the 750 Ft-lbs [1017 N.m] limit at the Transmission PTO driver gear. Refer to the Chelsea PTO Torque Limit Chart in the front of this section for complete torque limit information.

CAUTION: 660/680 Series: Applications above 1500 RPM output shaft speed, contact Chelsea Technical Service for approval. DO NOT use Standard Geared Adapters w/660 Series, contact Chelsea Technical Service.

CAUTION: Do not use geared adapters with 442 "A" and "C" ratios.

NOTE: The new Fuller C2000 Series (FR Series) transmissions have M10-1.5 threads for the 6 bolt opening and M12-1.75 threads for the 8 bolt opening.

(1) Input Gear Part No. 5-P-1004
(3) Input Gear Part No. 5-P-1100
(5) Input Gear Part No. 5-P-1102
(6) Input Gear Part No. 5-P-1103
(7) Input Gear Part No. 5-P-1104
(8) Input Gear Part No. 5-P-1105
(9) Input Gear Part No. 5-P-1135
(23) Input Gear Part No. 5-P-581
(31) Filler block furnished with P.T.O. but not required

Parker Hannifin Corporation
Chelsea Products Division
Olive Branch, MS 38654 USA

FRO-11210B
FRO-12210B
FRO-13210B
FRO-14210B
FRO-15210B
FRO-16210B

REAR SIDE ONLY

TRANSMISSION GEAR DATA:
REAR 00-BOLT Opening

PITCH LINE TO APERTURE FACE:

Caution: Application Approval Required for PTO Output Shaft Speeds Above 2500 RPM

REAR Side PTO Model	Inter. Torq.	Dir. Rot.	Engine %		Filler Block	Adapter Assy.	Stud Kit		Inter. Torq.	Dir. Rot.	Engine %		Filler Block	Adapter Assy.	Stud Kit
			Fwd.	Rev.							Fwd.	Rev.			

REAR MOUNT - MECHANICAL SHIFT (10 SPEED TRANSMISSIONS)

541-LBJ-*-* (26)	400	Eng	84			Furnished									
541-MBJ-*-* (25)	350	Eng	108			Furnished									
541-NBJ-*-* (24)	300	Eng	123			Furnished									

CAUTION: Eaton Transmission Division has established a MAXIMUM torque limit for the Transmission PTO driver gear. For all FR, FRO & FRLO transmissions the MAXIMUM torque limit for the transmission PTO driver gear is 750 Ft-lbs [1017 N.m]. All torque limits on this application page reflect the 750 Ft-lbs [1017 N.m] limit at the Transmission PTO driver gear. Refer to the Chelsea PTO Torque Limit Chart in the front of this section for complete torque limit information.

CAUTION: 660/680 Series: Applications above 1500 RPM output shaft speed, contact Chelsea Technical Service for approval. DO NOT use Standard Geared Adapters w/660 Series, contact Chelsea Technical Service.

CAUTION: Do not use geared adapters with 442 "A" and "C" ratios.

NOTE: The new Fuller C2000 Series (FR Series) transmissions have M10-1.5 threads for the 6 bolt opening and M12-1.75 threads for the 8 bolt opening.

(24) Input Gear Part No. 5-P-716
(25) Input Gear Part No. 5-P-717
(26) Input Gear Part No. 5-P-718

Parker Hannifin Corporation
Chelsea Products Division
Olive Branch, MS 38654 USA

F-5405B-DM3 (UltraShift HV)
F-6405B-DM3 (UltraShift HV)
FO-5406B-DM3 (UltraShift HV)
FO-6406A-ASW
FO-6406A-ASX
FO-6406A-AW3
FO-6406B-DM3 (UltraShift HV)
FO-8406A-ASW
FO-8406A-ASX
FO-8406A-AW3
FSO-5406A
FSO-6406A (Eaton Brazil)
FSO-8406A (Eaton Brazil)

LEFT SIDE ONLY

TRANSMISSION GEAR DATA:
L.S. 06-BOLT Opening Gear FORWARD of Centerline
48 Teeth - R.H. HELIX

PITCH LINE TO APERTURE FACE:
0.4900" (12.4460MM)

RIGHT SIDE ONLY

TRANSMISSION GEAR DATA:
R.S. 06-BOLT Opening Gear FORWARD of Centerline
48 Teeth - R.H. HELIX

PITCH LINE TO APERTURE FACE:
0.4900" (12.4460MM)

Caution: Application Approval Required for PTO Output Shaft Speeds Above 2500 RPM

LEFT Side PTO Model	Inter. Torq.	Dir. Rot.	Engine % Fwd.	Engine % Rev.	Filler Block	Adapter Assy.	Stud Kit	RIGHT Side PTO Model	Inter. Torq.	Dir. Rot.	Engine % Fwd.	Engine % Rev.	Filler Block	Adapter Assy.	Stud Kit
ONE SPEED - TWO GEAR - MECHANICAL SHIFT															
442KLJKX-*5 (1)	250	Opp	99		7-A-500		7170-5X	442KLJKX-*3 (1)	250	Opp	99		7-A-500		7170-5X
442KQJKX-*5 (1)	225	Opp	106		7-A-500		7170-5X	442KQJKX-*3 (1)	225	Opp	106		7-A-500		7170-5X
442KRJKX-*5 (1)	225	Opp	123		7-A-500		7170-5X	442KRJKX-*3 (1)	225	Opp	123		7-A-500		7170-5X
442KSJKX-*5 (1)	200	Opp	146		7-A-500		7170-5X	442KSJKX-*3 (1)	200	Opp	146		7-A-500		7170-5X
442KUJKX-*5 (1)	195	Opp	174		7-A-500		7170-5X	442KUJKX-*3 (1)	195	Opp	174		7-A-500		7170-5X
442KWJKX-*5 (1)	175	Opp	205		7-A-500		7170-5X	442KWJKX-*3 (1)	175	Opp	205		7-A-500		7170-5X
442KXJKX-*5 (1)	140	Opp	242		7-A-500		7170-5X	442KXJKX-*3 (1)	140	Opp	242		7-A-500		7170-5X
ONE SPEED - TWO GEAR POWERSHIFT (AIR OR HYDRAULIC)															
272XAJKX-*5	300	Opp	58				Furnished	272XAJKX-*3	300	Opp	58				Furnished
272XBJKX-*5	300	Opp	71				Furnished	272XBJKX-*3	300	Opp	71				Furnished
272XCJKX-*5	300	Opp	86				Furnished	272XCJKX-*3	300	Opp	86				Furnished
272XDJKX-*5	300	Opp	102				Furnished	272XDJKX-*3	300	Opp	102				Furnished
272XGJKX-*5	276	Opp	122				Furnished	272XGJKX-*3	276	Opp	122				Furnished
272XKJKX-*5	246	Opp	136				Furnished	272XKJKX-*3	246	Opp	136				Furnished
272XMJKX-*5	220	Opp	152				Furnished	272XMJKX-*3	220	Opp	152				Furnished
272XPJKX-*5	197	Opp	170				Furnished	272XPJKX-*3	197	Opp	170				Furnished
272XSJKX-*5	176	Opp	190				Furnished	272XSJKX-*3	176	Opp	190				Furnished
ONE SPEED - FORWARD & REVERSE															
352KSJKX-*5 (1)	140	Opp	148	192	7-A-500(T)		7170-5X	352KSJKX-*3 (1)	140	Opp	148	192	7-A-500(T)		7170-5X
GEARED ADAPTERS															
626KJKX-4JL (2)	250	Eng	0		7-A-500		7170-5X	626KJKX-3JL (2)	250	Eng	0		7-A-500		7170-5X
630KJKX-4JL (2)	250	Eng	0		7-A-500		7170-5X	630KJKX-3JL (2)	250	Eng	0		7-A-500		7170-5X
645KJKX-4JL (2)	250	Eng	0		7-A-500		7170-5X	645KJKX-3JL (2)	250	Eng	0		7-A-500		7170-5X

CAUTION: INPUT SIGNAL REQUIRED - The Eaton ASW, AW3, ASX & DM transmissions must have an input signal from the Power Take-Off when it is active. In this active state, the clutch engagement is controlled when the operator raises the engine speed to engage the clutch and drive the transmission main box countershaft. Minimum engine/transmission speed required for PTO operation is 1000 RPM, REFER to Eaton publication "TRIG-2600" for complete wiring information. INCORRECT or NO PTO interface signal to the transmission will result in uncontrolled engagement of the clutch during PTO operation.

NOTE: The "EH" Series Transmissions (Hybrid Electric) for Medium-Duty Utility, Telecom and Municipal Applications are Limited by Eaton to only ONE (1) PTO per application. The Right (Curb Side) Transmission PTO Aperture Cover Plate has a Speed Sensor mounted to the plate and can be moved to the Left (Street Side)Transmission PTO Aperture if using the Right Side PTO Aperture. SEE FLR-92Hy.

NOTE: FO-8406A-ASX, FO-6406A-ASX and FO-6406A-ASW Left Side not usable due to Inertia Brake mounted to the 6-Bolt opening.

NOTE: The 7-A-187 spacer and 7170-3X stud kit are required to mount the 442 Series to the adapter.

NOTE: 272 Series stated torque values on this page are for Intermittent and Continuous Duty Applications.

(1) Input Gear Part No. 5-P-1261
(2) Input Gear Part No. 5-P-1262

Eaton Fuller

Parker Hannifin Corporation
Chelsea Products Division
Olive Branch, MS 38654 USA

EH-8E306A-UP (Hybrid Electric System)
EH-8E306A-CD (Hybrid Electric System)
EH-8E306A-UPG (Hybrid Electric System)
EH-8E406A-CDR (Hybrid Electric System)
EH-8E406A-P (Hybrid Electric System)
EH-8E406A-T (Hybrid Electric System)
EH-8E406A-UP (Hybrid Electric System)
EH-8E406A-UPG (Hybrid Electric System)
EH-6E706B-CD (Hybrid Electric System)
EH-6E706B-P (Hybrid Electric System)
EH-8E406A-CD (Hybrid Electric System)

LEFT SIDE ONLY

TRANSMISSION GEAR DATA:
L.S. 06-BOLT Opening Gear FORWARD of Centerline
48 Teeth - R.H. HELIX

PITCH LINE TO APERTURE FACE:
0.4900" (12.4460MM)

Caution: Application Approval Required for PTO Output Shaft Speeds Above 2500 RPM

LEFT Side PTO Model	Inter. Torq.	Dir. Rot.	Engine %		Filler Block	Adapter Assy.	Stud Kit		Inter. Torq.	Dir. Rot.	Engine %		Filler Block	Adapter Assy.	Stud Kit
			Fwd.	Rev.							Fwd.	Rev.			
ONE SPEED - TWO GEAR - MECHANICAL SHIFT															
442KLJKX-*5 (1)	250	Opp	99		7-A-500		7170-5X								
442KQJKX-*5 (1)	225	Opp	106		7-A-500		7170-5X								
442KRJKX-*5 (1)	225	Opp	123		7-A-500		7170-5X								
442KSJKX-*5 (1)	200	Opp	146		7-A-500		7170-5X								
442KUJKX-*5 (1)	195	Opp	174		7-A-500		7170-5X								
442KWJKX-*5 (1)	175	Opp	205		7-A-500		7170-5X								
442KXJKX-*5 (1)	140	Opp	242		7-A-500		7170-5X								
ONE SPEED - TWO GEAR POWERSHIFT (AIR OR HYDRAULIC)															
272XAJKX-*5	300	Opp	58				Furnished								
272XBJKX-*5	300	Opp	71				Furnished								
272XCJKX-*5	300	Opp	86				Furnished								
272XDJKX-*5	300	Opp	102				Furnished								
272XGJKX-*5	276	Opp	122				Furnished								
272XKJKX-*5	246	Opp	136				Furnished								
272XMJKX-*5	220	Opp	152				Furnished								
272XPJKX-*5	197	Opp	170				Furnished								
272XSJKX-*5	176	Opp	190				Furnished								
ONE SPEED - TWO GEAR - POWERSHIFT (AIR)															
236KDJKX-*5 (1)	250	Opp	80		7-A-500		7170-5X								
236KKJKX-*5 (1)	250	Opp	102		7-A-500		7170-5X								
236KQJKX-*5 (1)	250	Opp	138		7-A-500		7170-5X								
236KUJKX-*5 (1)	225	Opp	157		7-A-500		7170-5X								
ONE SPEED - FORWARD & REVERSE															
352KSJKX-*5 (1)	140	Opp	148	192	7-A-500(T)		7170-5X								
GEARED ADAPTERS															
626KJKX-4JL (2)	250	Eng	0		7-A-500		7170-5X								
630KJKX-4JL (2)	250	Eng	0		7-A-500		7170-5X								
645KJKX-4JL (2)	250	Eng	0		7-A-500		7170-5X								

NOTE: ePTO (Battery Driven) Only Available with EH-8E306A-UP and Can Not Be Used In Combination with the Mechanical PTO.

NOTE: Motor RPM During ePTO Operation is 1000-1100 RPM Standard. Configurable to 1500 RPM in 100 RPM Increments.

NOTE: Maximum ePTO Output Must Not Exceed 13 HP Continuous or 26 HP Peak at 1100 RPM for Maximum Efficiency.

NOTE: All ePTO Application Duty Cycles Must be Evaluated for Optimum Efficiency.

NOTE: Mechanical (Engine/Transmission Driven) PTO is Available with EH-8E306A-CD, EH-8E306A-UP, EH8E306A-UPG.

NOTE: Remote Throttle, Remote Transmission, and Start/Stop Controls are Not Approved.

NOTE: The "EH" Series Transmissions (Hybrid Electric) for Medium-Duty Utility, Telecom and Municipal Applications are Limited by Eaton to only ONE (1) PTO per application. The Right (Curb Side) Transmission PTO Aperture Cover Plate has a Speed Sensor mounted to the plate and can be moved to the Left (Street Side)Transmission PTO Aperture if using the Right Side PTO Aperture.

NOTE: 272 Series stated torque values on this page are for Intermittent and Continuous Duty Applications.

(1) Input Gear Part No. 5-P-1261
(2) Input Gear Part No. 5-P-1262

Eaton Fuller

Parker Hannifin Corporation
Chelsea Products Division
Olive Branch, MS 38654 USA

FSB-5406B
FSB-6406B
FSB-6206A

LEFT SIDE ONLY

TRANSMISSION GEAR DATA:
L.S. 06-BOLT Opening Gear FORWARD of Centerline
38 Teeth - R.H. HELIX

PITCH LINE TO APERTURE FACE:
1.0850" (27.5590MM)

RIGHT SIDE ONLY

TRANSMISSION GEAR DATA:
R.S. 06-BOLT Opening Gear FORWARD of Centerline
38 Teeth - R.H. HELIX

PITCH LINE TO APERTURE FACE:
1.0850" (27.5590MM)

Caution: Application Approval Required for PTO Output Shaft Speeds Above 2500 RPM

LEFT Side PTO Model	Inter. Torq.	Dir. Rot.	Engine % Fwd.	Engine % Rev.	Filler Block	Adapter Assy.	Stud Kit	RIGHT Side PTO Model	Inter. Torq.	Dir. Rot.	Engine % Fwd.	Engine % Rev.	Filler Block	Adapter Assy.	Stud Kit
ONE SPEED - TWO GEAR - MECHANICAL SHIFT															
442XFESX-*5 (2)	250	Opp	53		7-A-062		Furnished	442XFESX-*3 (2)	250	Opp	53		7-A-062		Furnished
442XLESX-*5 (1)	250	Opp	69		7-A-062		Furnished	442XLESX-*3 (1)	250	Opp	69		7-A-062		Furnished
442XQESX-*5 (1)	225	Opp	74		7-A-062		Furnished	442XQESX-*3 (1)	225	Opp	74		7-A-062		Furnished
442XRESX-*5 (1)	225	Opp	85		7-A-062		Furnished	442XRESX-*3 (1)	225	Opp	85		7-A-062		Furnished
442XSESX-*5 (1)	200	Opp	102		7-A-062		Furnished	442XSESX-*3 (1)	200	Opp	102		7-A-062		Furnished
442XUESX-*5 (1)	195	Opp	121		7-A-062		Furnished	442XUESX-*3 (1)	195	Opp	121		7-A-062		Furnished
442XWESX-*5 (1)	175	Opp	143		7-A-062		Furnished	442XWESX-*3 (1)	175	Opp	143		7-A-062		Furnished
442XXESX-*5 (1)	140	Opp	169		7-A-062		Furnished	442XXESX-*3 (1)	140	Opp	169		7-A-062		Furnished
ONE SPEED - TWO GEAR POWERSHIFT (AIR OR HYDRAULIC)															
272XAESX-*5	300	Opp	32				Furnished	272XAESX-*3	300	Opp	32				Furnished
272XBESX-*5	300	Opp	39				Furnished	272XBESX-*3	300	Opp	39				Furnished
272XCESX-*5	300	Opp	47				Furnished	272XCESX-*3	300	Opp	47				Furnished
272XDESX-*5	300	Opp	57				Furnished	272XDESX-*3	300	Opp	57				Furnished
272XGESX-*5	300	Opp	67				Furnished	272XGESX-*3	300	Opp	67				Furnished
272XKESX-*5	300	Opp	75				Furnished	272XKESX-*3	300	Opp	75				Furnished
272XMESX-*5	300	Opp	84				Furnished	272XMESX-*3	300	Opp	84				Furnished
272XPESX-*5	286	Opp	94				Furnished	272XPESX-*3	286	Opp	94				Furnished
272XSESX-*5	256	Opp	105				Furnished	272XSESX-*3	256	Opp	105				Furnished
ONE SPEED - FORWARD & REVERSE															
340XFESX-*5 (3)	200	Opp	48	51	7-A-093 7-A-140(4)		328170-76X	340XFESX-*5 (3)	200	Opp	48	51	7-A-093 7-A-140(4)		328170-76X
352XSESX-*5 (1)	140	Opp	103	133	7-A-062		Furnished	352XSESX-*3 (1)	140	Opp	103	133	7-A-062		Furnished
GEARED ADAPTERS															
626XESX-4HL	250	Eng	0		7-A-062		Furnished	626XESX-3HL	250	Eng	0		7-A-062		Furnished
630XESX-4HL	250	Eng	0		7-A-062		Furnished	630XESX-3HL	250	Eng	0		7-A-062		Furnished
645XESX-4HL	250	Eng	0		7-A-062		Furnished	645XESX-3HL	250	Eng	0		7-A-062		Furnished

NOTE: 7-A-062 is required to mount the PTO at standard mounting depth of 1.085" due to the transmission gear tooth thickness that is 0.065" oversize.

NOTE: 272 Series stated torque values on this page are for Intermittent and Continuous Duty Applications.

(1) Input Gear Part No. 5-P-1059
(2) Input Gear Part No. 5-P-1092
(3) Input Gear Part No. 5-P-884
(4) Filler block furnished with P.T.O. but not required

Parker Hannifin Corporation
Chelsea Products Division
Olive Branch, MS 38654 USA

FRLO-16410C-T2
FRLO-14410C-T2
FRLO-15410C-T2
FRLO-14410C
FRLO-15410C
FRLO-16410C

LEFT SIDE ONLY

TRANSMISSION GEAR DATA:
L.S. 06-BOLT Opening Gear FORWARD of Centerline
51 Teeth - R.H. HELIX

PITCH LINE TO APERTURE FACE:
1.0850" (27.5590MM)

RIGHT SIDE ONLY

TRANSMISSION GEAR DATA:
R.S. 06-BOLT Opening Gear FORWARD of Centerline
51 Teeth - R.H. HELIX

PITCH LINE TO APERTURE FACE:
1.0850" (27.5590MM)

Caution: Application Approval Required for PTO Output Shaft Speeds Above 2500 RPM

LEFT Side PTO Model	Inter. Torq.	Dir. Rot.	Engine % Fwd.	Engine % Rev.	Filler Block	Adapter Assy.	Stud Kit	RIGHT Side PTO Model	Inter. Torq.	Dir. Rot.	Engine % Fwd.	Engine % Rev.	Filler Block	Adapter Assy.	Stud Kit
ONE SPEED - TWO GEAR - MECHANICAL SHIFT															
442GAJAX*5 (1)	250	Opp	43				Furnished	442GAJAX*3 (1)	250	Opp	43				Furnished
442GCJAX-*5 (8)	250	Opp	54				Furnished	442GCJAX-*3 (8)	250	Opp	54				Furnished
442GFJAX-*5 (3)	250	Opp	67				Furnished	442GFJAX-*3 (3)	250	Opp	67				Furnished
442GHJAX-*5 (4)	250	Opp	78				Furnished	442GHJAX-*3 (4)	250	Opp	78				Furnished
442GLJAX-*5 (1)	250	Opp	87				Furnished	442GLJAX-*3 (1)	250	Opp	87				Furnished
442GQJAX-*5 (1)	225	Opp	94				Furnished	442GQJAX-*3 (1)	225	Opp	94				Furnished
442GRJAX-*5 (1)	225	Opp	109				Furnished	442GRJAX-*3 (1)	225	Opp	109				Furnished
442GSJAX-*5 (1)	200	Opp	130				Furnished	442GSJAX-*3 (1)	200	Opp	130				Furnished
442GUJAX-*5 (1)	195	Opp	155				Furnished	442GUJAX-*3 (1)	195	Opp	155				Furnished
442GWJAX-*5 (1)	175	Opp	182				Furnished	442GWJAX-*3 (1)	175	Opp	182				Furnished
442GXJAX-*5 (1)	140	Opp	215				Furnished	442GXJAX-*3 (1)	140	Opp	215				Furnished
660GFJAX-*5 (5)	375	Opp	67				Furnished	660GFJAX-*3 (5)	375	Opp	67				Furnished
660GQJAX-*5 (6)	330	Opp	94				Furnished	660GQJAX-*3 (6)	330	Opp	94				Furnished
660GSJAX-*5 (7)	240	Opp	130				Furnished	660GSJAX-*3 (7)	240	Opp	130				Furnished
ONE SPEED - TWO GEAR - POWERSHIFT (AIR)															
236GDJAX-*5 (1)	250	Opp	70				Furnished	236GKJAX-*3 (1)	250	Opp	91				Furnished
236GKJAX-*5 (1)	250	Opp	91				Furnished	236GQJAX-*3 (1)	250	Opp	122				Furnished
236GQJAX-*5 (1)	250	Opp	122				Furnished	236GUJAX-*3 (1)	225	Opp	140				Furnished
236GUJAX-*5 (1)	225	Opp	140				Furnished								
GEARED ADAPTERS															
626GJAX-4JC (2)	250	Eng	0				Furnished	626GJAX-3JC (2)	250	Eng	0				Furnished
630GJAX-4JC (2)	250	Eng	0				Furnished	630GJAX-3JC (2)	250	Eng	0				Furnished
								645GJAX-3JC (2)	250	Eng	0				Furnished

CAUTION: Eaton Transmission Division has established a MAXIMUM torque limit for the Transmission PTO driver gear. For all FR, FRO & FRLO transmissions the MAXIMUM torque limit for the transmission PTO driver gear is 750 Ft-lbs [678 Nm]. All torque limits on this application page reflect the 750 Ft-lbs [678 Nm] limit at the Transmission PTO driver gear. Refer to the Chelsea PTO Torque Limit Chart in the front section of this catalog for complete torque limit information.

CAUTION: Do not use geared adapters with 442 "A" and "C" ratios.

CAUTION: 660/680 Series: Applications above 1500 RPM output shaft speed, contact Chelsea Technical Service for approval.

NOTE: When using a 626G/630G or 645G adapter on this transmission, put 5-P-1243 gear in the adapter and the 5-P-1247 gear in the 442 Series PTO 7-A-165 spacer is required between the adapter and the 442 Series. Normal backlash will need to be checked between the PTO and the adapter. Use stud kit 7170-3X to mount the 442 Series to the Adapter.

(1) Input Gear Part No. 5-P-1243
(2) Input Gear Part No. 5-P-1247
(3) Input Gear Part No. 5-P-1340
(4) Input Gear Part No. 5-P-1342
(5) Input Gear Part No. 5-P-1345
(6) Input Gear Part No. 5-P-1346
(7) Input Gear Part No. 5-P-1347
(8) Input Gear Part No. 5-P-1368

Parker Hannifin Corporation
Chelsea Products Division
Olive Branch, MS 38654 USA

FSO-8209A (Left Side Forward Opening)
FSO-6109A (Left Forward)

LEFT FRONT SIDE ONLY

TRANSMISSION GEAR DATA:
L.F. 06-BOLT Opening Gear NON-STANDARD of Centerline
43 Teeth - R.H. HELIX

PITCH LINE TO APERTURE FACE:
2.9730" (75.5142MM)

Caution: Application Approval Required for PTO Output Shaft Speeds Above 2500 RPM

LEFT FRONT Side PTO Model	Inter. Torq.	Dir. Rot.	Engine % Fwd.	Engine % Rev.	Filler Block	Adapter Assy.	Stud Kit		Inter. Torq.	Dir. Rot.	Engine % Fwd.	Engine % Rev.	Filler Block	Adapter Assy.	Stud Kit
ONE SPEED - TWO GEAR - MECHANICAL SHIFT															
442XFAHX-*5 (2)	250	Eng	113			329182-1X	Furnished								
442XHAHX-*5 (3)	250	Eng	131			329182-1X	Furnished								
442XLAHX-*5 (1)	250	Eng	146			329182-1X	Furnished								
442XQAHX-*5 (1)	225	Eng	157			329182-1X	Furnished								
442XRAHX-*5 (1)	225	Eng	182			329182-1X	Furnished								
442XSAHX-*5 (1)	200	Eng	217			329182-1X	Furnished								
442XUAHX-*5 (1)	195	Eng	258			329182-1X	Furnished								
442XWAHX-*5 (1)	175	Eng	304			329182-1X	Furnished								
442XXAHX-*5 (1)	140	Eng	359			329182-1X	Furnished								
660XHAHX-*5 (3)	375	Eng	131			329182-1X	Furnished								
ONE SPEED - TWO GEAR POWERSHIFT (AIR OR HYDRAULIC)															
272XAAJX-*5	300	Eng	84			329182X	Furnished								
272XBAJX-*5	300	Eng	104			329182X	Furnished								
272XCAJX-*5	300	Eng	125			329182X	Furnished								
272XGAJX-*5	300	Eng	178			329182X	Furnished								
272XKAJX-*5	300	Eng	199			329182X	Furnished								
ONE SPEED - TWO GEAR - POWERSHIFT (AIR)															
230XKAJX-*5	250	Eng	121			329182-1X	Furnished								
230XQAJX-*5	250	Eng	161			329182-1X	Furnished								
230XUAJX-*5	225	Eng	257			329182-1X	Furnished								

NOTE: There are two SAE 6 bolt pads on the left side of this transmission.

NOTE: The 230 and 442 series will mount with the 329182-1X adapter on the front opening only. The 272 Series will mount with the 329182X adapter on the front opening only.

NOTE: 272 Series stated torque values on this page are for Intermittent and Continuous Duty Applications.

(1) Input Gear Part No. 5-P-1004
(2) Input Gear Part No. 5-P-1077
(3) Input Gear Part No. 5-P-1364

Parker Hannifin Corporation
Chelsea Products Division
Olive Branch, MS 38654 USA

FSO-8209A (Left Rear)
FSO-6109A (Left Rear)

LEFT REAR SIDE ONLY

TRANSMISSION GEAR DATA:
L.R. 06-BOLT Opening Gear NON-STANDARD of Centerline
23 Teeth - SPUR

PITCH LINE TO APERTURE FACE:
1.1480" (29.1592MM)

Caution: Application Approval Required for PTO Output Shaft Speeds Above 2500 RPM

LEFT REAR Side PTO Model	Inter. Torq.	Dir. Rot.	Engine %		Filler Block	Adapter Assy.	Stud Kit		Inter. Torq.	Dir. Rot.	Engine %		Filler Block	Adapter Assy.	Stud Kit
			Fwd.	Rev.							Fwd.	Rev.			
ONE SPEED - TWO GEAR - MECHANICAL SHIFT															
447GQGPX-*5 (1)	225	Eng	49				Furnished								
447GRGPX-*5 (5)	225	Eng	57				Furnished								
447GSGPX-*5 (2)	200	Eng	68				Furnished								
447GUGPX-*5 (3)	195	Eng	81				Furnished								
447GWGPX-*5 (4)	175	Eng	95				Furnished								

NOTE: There are two SAE 6 bolt pads on the left side of this transmission.

NOTE: The 447 series will mount on the rear opening only.

NOTE: Only the rear opening can be used on the FS-8209B transmission.

(1) Input Gear Part No. 5-P-1145
(2) Input Gear Part No. 5-P-1146
(3) Input Gear Part No. 5-P-1147
(4) Input Gear Part No. 5-P-1148
(5) Input Gear Part No. 5-P-1215

Eaton Fuller

Parker Hannifin Corporation
Chelsea Products Division
Olive Branch, MS 38654 USA

FS-6406N
FS-5406N
F-5405-DM3
F-8406N-ASW
F-6406N-ASW
F-6406N-AW3
FO-6406N-AW3
F-6406N-ASX

LEFT SIDE ONLY

TRANSMISSION GEAR DATA:
L.S. 06-BOLT Opening Gear FORWARD of Centerline
39 Teeth - R.H. HELIX

PITCH LINE TO APERTURE FACE:
1.1600" (29.4640MM)

RIGHT SIDE ONLY

TRANSMISSION GEAR DATA:
R.S. 06-BOLT Opening Gear FORWARD of Centerline
39 Teeth - R.H. HELIX

PITCH LINE TO APERTURE FACE:
1.1600" (29.4640MM)

Caution: Application Approval Required for PTO Output Shaft Speeds Above 2500 RPM

LEFT Side PTO Model	Inter. Torq.	Dir. Rot.	Engine % Fwd.	Engine % Rev.	Filler Block	Adapter Assy.	Stud Kit	RIGHT Side PTO Model	Inter. Torq.	Dir. Rot.	Engine % Fwd.	Engine % Rev.	Filler Block	Adapter Assy.	Stud Kit
ONE SPEED - TWO GEAR - MECHANICAL SHIFT															
442XFJWX-*5 (2)	250	Opp	51				Furnished	442XFJWX-*3 (2)	250	Opp	51				Furnished
442XLJWX-*5 (1)	250	Opp	66				Furnished	442XLJWX-*3 (1)	250	Opp	66				Furnished
442XQJWX-*5 (1)	225	Opp	71				Furnished	442XQJWX-*3 (1)	225	Opp	71				Furnished
442XRJWX-*5 (1)	225	Opp	83				Furnished	442XRJWX-*3 (1)	225	Opp	83				Furnished
442XSJWX-*5 (1)	200	Opp	98				Furnished	442XSJWX-*3 (1)	200	Opp	98				Furnished
442XUJWX-*5 (1)	195	Opp	117				Furnished	442XUJWX-*3 (1)	195	Opp	117				Furnished
442XWJWX-*5 (1)	175	Opp	138				Furnished	442XWJWX-*3 (1)	175	Opp	138				Furnished
442XXJWX-*5 (1)	140	Opp	163				Furnished	442XXJWX-*3 (1)	140	Opp	163				Furnished
ONE SPEED - TWO GEAR POWERSHIFT (AIR OR HYDRAULIC)															
272XAJWX-*5	300	Opp	30				Furnished	272XAJWX-*3	300	Opp	30				Furnished
272XBJWX-*5	300	Opp	37				Furnished	272XBJWX-*3	300	Opp	37				Furnished
272XCJWX-*5	300	Opp	44				Furnished	272XCJWX-*3	300	Opp	44				Furnished
272XDJWX-*5	300	Opp	53				Furnished	272XDJWX-*3	300	Opp	53				Furnished
272XGJWX-*5	300	Opp	63				Furnished	272XGJWX-*3	300	Opp	63				Furnished
272XKJWX-*5	300	Opp	70				Furnished	272XKJWX-*3	300	Opp	70				Furnished
272XMJWX-*5	300	Opp	78				Furnished	272XMJWX-*3	300	Opp	78				Furnished
272XPJWX-*5	300	Opp	88				Furnished	272XPJWX-*3	300	Opp	88				Furnished
272XSJWX-*5	271	Opp	98				Furnished	272XSJWX-*3	271	Opp	98				Furnished
ONE SPEED - FORWARD & REVERSE															
340XFJWX-*5 (3)	200	Opp	46	49			Furnished	340XFJWX-*5 (3)	200	Opp	46	49			Furnished
352XSJWX-*5 (1)	140	Opp	100	129			Furnished	352XSJWX-*3 (1)	140	Opp	100	129			Furnished
GEARED ADAPTERS															
626XJWX-4KB	250	Eng	0				Furnished	626XJWX-3KB	250	Eng	0				Furnished
630XJWX-4KB	250	Eng	0				Furnished	630XJWX-3KB	250	Eng	0				Furnished
645XJWX-4KB	250	Eng	0				Furnished	645XJWX-3KB	250	Eng	0				Furnished

CAUTION: The Eaton ASW, AW3, ASX & DM transmissions must have an input signal from the Power Take-Off when it is active. In this active state, the clutch engagement is controlled when the operator raises the engine speed to engage the clutch and drive the transmission main box countershaft. Minimum engine/transmission speed required for PTO operation is 1000 RPM, REFER to Eaton publication "TRIG-2600" for complete wiring information. INCORRECT or NO PTO interface signal to the transmission will result in uncontrolled engagement of the clutch during PTO operation.

NOTE: The 626 and 645 Series adapters can not be used with the 442 Series "F" ratio.

NOTE: The 626/645 Series adapters can be mounted on this transmission by replacing the 5-P-1319 gear in the 442 Series with the 5-P-1321 and putting the 5-P-1319 gear in the adapter assembly. A 7-A-093 spacer is required between the adapter and the PTO to get proper backlash. Use 7170-3X stud kit to mount the PTO to the adapter. Use the stud kit supplied with the adapter to mount it to the transmission.

NOTE: 272 Series stated torque values on this page are for Intermittent and Continuous Duty Applications.

(1) Input Gear Part No. 5-P-1319
(2) Input Gear Part No. 5-P-1320
(3) Input Gear Part No. 5-P-1404

Eaton Fuller

Parker Hannifin Corporation
Chelsea Products Division
Olive Branch, MS 38654 USA

RTO-10910B-DM2 (UltraShift)
RTO-12910B-DM2 (UltraShift)
RTO-14910B-DM2 (UltraShift)
RTO-16910B-DM2 (UltraShift)
RTO-10910B-DM3 (UltraShift)
RTO-12910B-DM3 (UltraShift)
RTO-14910B-DM3 (UltraShift)
RTO-16910B-DM3 (UltraShift)

RTOM-16910B-DM3 (UltraShift)

BOTTOM SIDE ONLY

TRANSMISSION GEAR DATA:
BOT 08-BOLT Opening Gear FORWARD of Centerline
47 Teeth - SPUR

PITCH LINE TO APERTURE FACE:
0.8050" (20.4500MM)

RIGHT SIDE ONLY

TRANSMISSION GEAR DATA:
R.S. 06-BOLT Opening Gear FORWARD of Centerline
45 Teeth - SPUR

PITCH LINE TO APERTURE FACE:
1.0850" (27.5600MM)

Caution: Application Approval Required for PTO Output Shaft Speeds Above 2500 RPM

ONE SPEED - TWO GEAR - MECHANICAL SHIFT

BOTTOM Side PTO Model	Inter. Torq.	Dir. Rot.	Engine % Fwd.	Engine % Rev.	Filler Block	Adapter Assy.	Stud Kit	RIGHT Side PTO Model	Inter. Torq.	Dir. Rot.	Engine % Fwd.	Engine % Rev.	Filler Block	Adapter Assy.	Stud Kit
221ZCAHX-*3	250	Opp	82		7-A-032(P)(28)	328564X	Furnished	221XCAHX-*3	250	Opp	79		7-A-032(28)		Furnished
221ZEAHX-*3	250	Opp	95			328564X	Furnished	221XEAHX-*3	250	Opp	91				Furnished
221ZLAHX-*3	200	Opp	128			328564X	Furnished	221XLAHX-*3	200	Opp	122				Furnished
221ZPAHX-*3	200	Opp	154			328564X	Furnished	221XPAHX-*3	200	Opp	148				Furnished
489XAAHX-*5 (12)	250	Opp	72				Furnished	442XAAHX-*3 (12)	250	Opp	69				Furnished
489XCAHX-*5 (13)	250	Opp	93				Furnished	442XBAHX-*3 (18)	250	Eng	69			REQUIRED	Furnished
489XFAHX-*5 (2)	250	Opp	114				Furnished	442XCAHX-*3 (13)	250	Opp	89				Furnished
489XHAHX-*5 (15)	250	Opp	132				Furnished	442XFAHX-*3 (2)	250	Opp	110				Furnished
489XLAHX-*5 (1)	222	Opp	148				Furnished	442XHAHX-*3 (15)	250	Opp	127				Furnished
489XQAHX-*5 (1)	206	Opp	160				Furnished	442XLAHX-*3 (1)	233	Opp	142				Furnished
489XRAHX-*5 (1)	178	Opp	185				Furnished	442XQAHX-*3 (1)	216	Opp	153				Furnished
489XSAHX-*5 (1)	150	Opp	220				Furnished	442XRAHX-*3 (1)	187	Opp	177				Furnished
489XUAHX-*5 (1)	126	Opp	262				Furnished	442XSAHX-*3 (1)	156	Opp	211				Furnished
489XWAHX-*5 (1)	107	Opp	308				Furnished	442XUAHX-*3 (1)	132	Opp	251				Furnished
489XXAHX-*5 (1)	91	Opp	365				Furnished	442XWAHX-*3 (1)	112	Opp	295				Furnished
680XFAHX-*3 (10)	288	Opp	114				Furnished	442XXAHX-*3 (1)	94	Opp	349				Furnished
680XHAHX-*3 (20)	249	Opp	132				Furnished	660XFAHX-*3 (10)	301	Opp	110				Furnished
680XQAHX-*3 (11)	206	Opp	160				Furnished	660XHAHX-*3 (15)	260	Opp	127				Furnished
680XRAHX-*3 (19)	178	Opp	185				Furnished	660XQAHX-*3 (11)	216	Opp	153				Furnished
680XSAHX-*3 (14)	150	Opp	220				Furnished	660XRAHX-*3 (19)	187	Opp	177				Furnished
823XBAHX-*3 (22)	423	Opp	78				Furnished	660XSAHX-*3 (14)	156	Opp	211				Furnished
823XDAHX-*3 (26)	357	Opp	78				Furnished								
823XGAHX-*3 (27)	329	Opp	100				Furnished								
823XJAHX-*3 (23)	279	Opp	118				Furnished								
823XMAHX-*3 (21)	238	Opp	139				Furnished								
823XRAHX-*3 (25)	172	Opp	191				Furnished								
823XTKTX-*3 (17)	142	Opp	231		8-A-165(28)		Furnished								
880XBAHX-*3 (3)	423	Opp	78				Furnished								
880XDAHX-*3 (4)	357	Opp	92				Furnished								
880XGAHX-*3 (9)	329	Opp	100				Furnished								
880XJAHX-*3 (5)	279	Opp	118				Furnished								
880XMAHX-*3 (6)	238	Opp	139				Furnished								

Continued Next Page

CAUTION: Eaton Transmission Division has established a Maximum Torque Limit for the Transmission PTO Driver Gear. For all RT/RTO/RTLO transmissions the torque limit is 350 Ft-lbs [475 N.m] unless the transmission has been upgraded to a roller type input shaft bearing, Eaton part number 4301417, then 750 Ft-lbs [1017 N.m] torque becomes the Maximum limit. All torque limits on this application page reflect the 350 Ft-lbs [475 N.m] limit at the Transmission PTO Drive Gear.Refer to the Chelsea PTO Torque Limit Chart in the front of this section for complete torque limit information.

CAUTION: INPUT SIGNAL REQUIRED - The Eaton UltraShift DM transmission must have an input signal from the Power Take-Off when it is active. In this active state, the clutch engagement is controlled when the operator raises the engine speed to engage the clutch and drive the transmission main box countershaft. Minimum engine/transmission speed required for PTO operation is 1000 RPM, per Eaton spec. "TRIG-2600". INCORRECT or NO PTO interface signal to the transmission will result in uncontrolled engagement of the clutch during PTO operation.

CAUTION: 660/680 Series: Applications above 1500 RPM output shaft speed, contact Chelsea Technical Service for approval. DO NOT use Standard Geared Adapters w/660 Series, contact Chelsea Technical Service.

NOTE: 630-02 - The Eaton Inertia Brake comes standard mounted on the bottom 8 bolt opening. If the 8 bolt opening is required for a PTO the Interia Brake can be relocated to the right side 6 bolt opening. If there is any interference (frame rails, etc.) on the right side when mounting the Inertia Brake, a 630-02 adapter can be used to move the I-Brake away from the interference.

NOTE: Refer to Eaton Installation Guide "TRIG-2600" for proper wiring diagram showing the interface connections between the PTO indicator switch and the terminal connection on the transmission.

NOTE: The 442XBAH must use one of the geared adapters listed on the application page. The direction of rotation shown is the final output shaft rotation w/ geared adapter.

(1) Input Gear Part No. 5-P-1004
(2) Input Gear Part No. 5-P-1077
(3) Input Gear Part No. 5-P-1100
(4) Input Gear Part No. 5-P-1101
(5) Input Gear Part No. 5-P-1102
(6) Input Gear Part No. 5-P-1103
(9) Input Gear Part No. 5-P-1135
(10) Input Gear Part No. 5-P-1242
(11) Input Gear Part No. 5-P-1246
(12) Input Gear Part No. 5-P-1280
(13) Input Gear Part No. 5-P-1287
(14) Input Gear Part No. 5-P-1322
(15) Input Gear Part No. 5-P-1364
(17) Input Gear Part No. 5-P-1395
(18) Input Gear Part No. 5-P-1418
(19) Input Gear Part No. 5-P-1441
(20) Input Gear Part No. 5-P-1494
(21) Input Gear Part No. 5-P-283
(22) Input Gear Part No. 5-P-285
(23) Input Gear Part No. 5-P-325
(25) Input Gear Part No. 5-P-721
(26) Input Gear Part No. 5-P-971
(27) Input Gear Part No. 5-P-980
(28) Filler block furnished with P.T.O.

Parker Hannifin Corporation
Chelsea Products Division
Olive Branch, MS 38654 USA

RTO-10910B-DM2 (UltraShift)
RTO-12910B-DM2 (UltraShift)
RTO-14910B-DM2 (UltraShift)
RTO-16910B-DM2 (UltraShift)
RTO-10910B-DM3 (UltraShift)
RTO-12910B-DM3 (UltraShift)
RTO-14910B-DM3 (UltraShift)
RTO-16910B-DM3 (UltraShift)

RTOM-16910B-DM3 (UltraShift)

BOTTOM SIDE ONLY

TRANSMISSION GEAR DATA:
BOT 08-BOLT Opening Gear FORWARD of Centerline
47 Teeth - SPUR

PITCH LINE TO APERTURE FACE:
0.8050" (20.4500MM)

RIGHT SIDE ONLY

TRANSMISSION GEAR DATA:
R.S. 06-BOLT Opening Gear FORWARD of Centerline
45 Teeth - SPUR

PITCH LINE TO APERTURE FACE:
1.0850" (27.5600MM)

Caution: Application Approval Required for PTO Output Shaft Speeds Above 2500 RPM

BOTTOM Side PTO Model	Inter. Torq.	Dir. Rot.	Engine % Fwd.	Engine % Rev.	Filler Block	Adapter Assy.	Stud Kit	RIGHT Side PTO Model	Inter. Torq.	Dir. Rot.	Engine % Fwd.	Engine % Rev.	Filler Block	Adapter Assy.	Stud Kit
ONE SPEED - TWO GEAR - MECHANICAL SHIFT															
880XQAHX-*3 (16)	203	Opp	162				Furnished								
880XRAHX-*3 (7)	172	Opp	191				Furnished								
880XTAHX-*3 (8)	134	Opp	246				Furnished								
ONE SPEED - TWO GEAR POWERSHIFT (AIR OR HYDRAULIC)															
282XBAJX-*3	300	Opp	78				Furnished	272XAAJX-*3	300	Opp	61				Furnished
282XCAJX-*3	300	Opp	94				Furnished	272XBAJX-*3	300	Opp	75				Furnished
282XDAJX-*3	293	Opp	113				Furnished	272XCAJX-*3	300	Opp	90				Furnished
282XGAJX-*3	246	Opp	134				Furnished	272XDAJX-*3	300	Opp	108				Furnished
282XKAJX-*3	220	Opp	150				Furnished	272XGAJX-*3	257	Opp	128				Furnished
282XMAJX-*3	197	Opp	168				Furnished	272XKAJX-*3	230	Opp	144				Furnished
282XPAJX-*3	176	Opp	180				Furnished	272XMAJX-*3	206	Opp	161				Furnished
282XSAJX-*3	158	Opp	210				Furnished	272XPAJX-*3	184	Opp	180				Furnished
282XTAJX-*3	141	Opp	235				Furnished	272XSAJX-*3	165	Opp	201				Furnished
ONE SPEED - TWO GEAR - POWERSHIFT (AIR)															
885XBAHX-*3 (3)	423	Opp	78				Furnished								
885XGAHX-*3 (9)	329	Opp	100				Furnished								
885XJAHX-*3 (5)	279	Opp	118				Furnished								
885XMAHX-*3 (6)	238	Opp	139				Furnished								
ONE SPEED - FORWARD & REVERSE															
348XFAHX-*5 (24)	200	Opp	100	105			Furnished	340XFAHX-*5 (24)	200	Opp	96	101	7-A-140(28)		Furnished
352ZSAHX-*3 (1)	140	Opp	223	288		328564X	Furnished	352XSAHX-*3 (1)	140	Opp	213	276			Furnished
863XBAHX-*5	423	Opp	78	97			Furnished								
GEARED ADAPTERS															
628XAHX-3AH	250	Eng	0		8-A-032		Furnished	626XAHX-3AH	250	Eng	0				Furnished
								630-02	250	Eng	0				Furnished
								630XAHX-3AH	250	Eng	0				Furnished
								645XAHX-3AH	250	Eng	0				Furnished

Continued Next Page

CAUTION: Eaton Transmission Division has established a Maximum Torque Limit for the Transmission PTO Driver Gear. For all RT/RTO/RTLO transmissions the torque limit is 350 Ft-lbs [475 N.m] unless the transmission has been upgraded to a roller type input shaft bearing, Eaton part number 4301417, then 750 Ft-lbs [1017 N.m] torque becomes the Maximum limit. All torque limits on this application page reflect the 350 Ft-lbs [475 N.m] limit at the Transmission PTO Drive Gear.Refer to the Chelsea PTO Torque Limit Chart in the front of this section for complete torque limit information.

CAUTION: INPUT SIGNAL REQUIRED - The Eaton UltraShift DM transmission must have an input signal from the Power Take-Off when it is active. In this active state, the clutch engagement is controlled when the operator raises the engine speed to engage the clutch and drive the transmission main box countershaft. Minimum engine/transmission speed required for PTO operation is 1000 RPM, per Eaton spec. "TRIG-2600". INCORRECT or NO PTO interface signal to the transmission will result in uncontrolled engagement of the clutch during PTO operation.

CAUTION: 660/680 Series: Applications above 1500 RPM output shaft speed, contact Chelsea Technical Service for approval. DO NOT use Standard Geared Adapters w/660 Series, contact Chelsea Technical Service.

NOTE: 630-02 - The Eaton Inertia Brake comes standard mounted on the bottom 8 bolt opening. If the 8 bolt opening is required for a PTO the Interia Brake can be relocated to the right side 6 bolt opening. If there is any interference (frame rails, etc.) on the right side when mounting the Inertia Brake, a 630-02 adapter can be used to move the I-Brake away from the interference.

NOTE: Refer to Eaton Installation Guide "TRIG-2600" for proper wiring diagram showing the interface connections between the PTO indicator switch and the terminal connection on the transmission.

NOTE: The 442XBAH must use one of the geared adapters listed on the application page. The direction of rotation shown is the final output shaft rotation w/ geared adapter.

(1) Input Gear Part No. 5-P-1004
(3) Input Gear Part No. 5-P-1100
(5) Input Gear Part No. 5-P-1102
(6) Input Gear Part No. 5-P-1103
(7) Input Gear Part No. 5-P-1104
(8) Input Gear Part No. 5-P-1105
(9) Input Gear Part No. 5-P-1135
(16) Input Gear Part No. 5-P-1385
(24) Input Gear Part No. 5-P-581
(28) Filler block furnished with P.T.O.

Parker Hannifin Corporation
Chelsea Products Division
Olive Branch, MS 38654 USA

RTO-10910B-DM2 (UltraShift)
RTO-12910B-DM2 (UltraShift)
RTO-14910B-DM2 (UltraShift)
RTO-16910B-DM2 (UltraShift)
RTO-10910B-DM3 (UltraShift)
RTO-12910B-DM3 (UltraShift)
RTO-14910B-DM3 (UltraShift)
RTO-16910B-DM3 (UltraShift)

RTOM-16910B-DM3 (UltraShift)

REAR SIDE ONLY

TRANSMISSION GEAR DATA:
REAR 00-BOLT Opening

PITCH LINE TO APERTURE FACE:

Caution: Application Approval Required for PTO Output Shaft Speeds Above 2500 RPM

REAR Side PTO Model	Inter. Torq.	Dir. Rot.	Engine %		Filler Block	Adapter Assy.	Stud Kit		Inter. Torq.	Dir. Rot.	Engine %		Filler Block	Adapter Assy.	Stud Kit
			Fwd.	Rev.							Fwd.	Rev.			

REAR MOUNT - "AU" MOUNTING OPTION

541-LAU-*-*	400	Eng	91			Furnished
541-MAU-*-*	350	Eng	117			Furnished
541-NAU-*-*	300	Eng	133			Furnished

CAUTION: Eaton Transmission Division has established a Maximum Torque Limit for the Transmission PTO Driver Gear. For all RT/RTO/RTLO transmissions the torque limit is 350 Ft-lbs [475 N.m] unless the transmission has been upgraded to a roller type input shaft bearing, Eaton part number 4301417, then 750 Ft-lbs [1017 N.m] torque becomes the Maximum limit. All torque limits on this application page reflect the 350 Ft-lbs [475 N.m] limit at the Transmission PTO Drive Gear.Refer to the Chelsea PTO Torque Limit Chart in the front of this section for complete torque limit information.

CAUTION: INPUT SIGNAL REQUIRED - The Eaton UltraShift DM transmission must have an input signal from the Power Take-Off when it is active. In this active state, the clutch engagement is controlled when the operator raises the engine speed to engage the clutch and drive the transmission main box countershaft. Minimum engine/transmission speed required for PTO operation is 1000 RPM, per Eaton spec. "TRIG-2600". INCORRECT or NO PTO interface signal to the transmission will result in uncontrolled engagement of the clutch during PTO operation.

CAUTION: 660/680 Series: Applications above 1500 RPM output shaft speed, contact Chelsea Technical Service for approval. DO NOT use Standard Geared Adapters w/660 Series, contact Chelsea Technical Service.

NOTE: 630-02 - The Eaton Inertia Brake comes standard mounted on the bottom 8 bolt opening. If the 8 bolt opening is required for a PTO the Interia Brake can be relocated to the right side 6 bolt opening. If there is any interference (frame rails, etc.) on the right side when mounting the Inertia Brake, a 630-02 adapter can be used to move the I-Brake away from the interference.

NOTE: Refer to Eaton Installation Guide "TRIG-2600" for proper wiring diagram showing the interface connections between the PTO indicator switch and the terminal connection on the transmission.

NOTE: The 442XBAH must use one of the geared adapters listed on the application page. The direction of rotation shown is the final output shaft rotation w/ geared adapter.

Parker Hannifin Corporation
Chelsea Products Division
Olive Branch, MS 38654 USA

ET-16109 (Eaton China) Thrushaft use BJ mounting
ET-16110 (Eaton China) Thrushaft use LG mounting
ET-18109 (Eaton China) Thrushaft use BJ mounting
ET-18110 (Eaton China) Thrushaft use LG mounting
ET-20109 (Eaton China) Thrushaft use BJ mounting
ET-20110 (Eaton China) Thrushaft use LG mounting
ETS-16409 (Eaton India) Thrushaft use BJ mounting
ETS-16410 (Eaton India) Thrushaft use LG mounting
ETS-18409 (Eaton India) Thrushaft use BJ mounting
ETS-18410 (Eaton India) Thrushaft use LG mounting
ETS-20409 (Eaton India) Thrushaft use BJ mounting
ETS-20410 (Eaton India) Thrushaft use LG mounting
FTS-16108LL (Eaton Europe/Brazil) Thrushaft use LG mounting
FTS-16109A (Eaton Europe/Brazil) Thrushaft use BJ mounting
FTS-18108LL (Eaton Europe/Brazil) Thrushaft use LG mounting
FTS-18109A (Eaton Europe/Brazil) Thrushaft use BJ mounting
FTS-20108LL (Eaton Europe/Brazil) Thrushaft use LG mounting
FTS-20109A (Eaton Europe/Brazil) Thrushaft use BJ mounting
RTS-11909A (Thrushaft use BJ mounting)

BOTTOM SIDE ONLY

TRANSMISSION GEAR DATA:
BOT 08-BOLT Opening Gear REAR of Centerline
58 Teeth - SPUR

PITCH LINE TO APERTURE FACE:
1.2765" (32.4230MM)

RIGHT SIDE ONLY

TRANSMISSION GEAR DATA:
R.S. 06-BOLT Opening Gear REAR of Centerline
58 Teeth - SPUR

PITCH LINE TO APERTURE FACE:
1.1924" (30.2870MM)

Caution: Application Approval Required for PTO Output Shaft Speeds Above 2500 RPM

BOTTOM Side PTO Model	Inter. Torq.	Dir. Rot.	Engine % Fwd.	Engine % Rev.	Filler Block	Adapter Assy.	Stud Kit	RIGHT Side PTO Model	Inter. Torq.	Dir. Rot.	Engine % Fwd.	Engine % Rev.	Filler Block	Adapter Assy.	Stud Kit
ONE SPEED - TWO GEAR - MECHANICAL SHIFT															
489ELLDX-*4 (1)	250	Opp	78				Furnished	442GLLDX-*4 (1)	250	Opp	78				Furnished
489EQLDX-*4 (1)	225	Opp	84				Furnished	442GQLDX-*4 (1)	225	Opp	84				Furnished
489ERLDX-*4 (1)	225	Opp	97				Furnished	442GRLDX-*4 (1)	225	Opp	97				Furnished
489ESLDX-*4 (1)	200	Opp	116				Furnished	442GSLDX-*4 (1)	200	Opp	116				Furnished
489EULDX-*4 (1)	195	Opp	138				Furnished	442GULDX-*4 (1)	195	Opp	138				Furnished
489EWLDX-*4 (1)	175	Opp	162				Furnished	442GWLDX-*4 (1)	175	Opp	162				Furnished
680EQLDX-*4 (1)	295	Opp	84				Furnished	442GXLDX-*4 (1)	140	Opp	192				Furnished
680ERLDX-*4 (1)	295	Opp	97				Furnished	660RQLDX-*4 (1)	295	Opp	84				Furnished
680ESLDX-*4 (1)	295	Opp	116				Furnished	660RRLDX-*4 (1)	295	Opp	97				Furnished
								660RSLDX-*4 (1)	255	Opp	116				Furnished
ONE SPEED - TWO GEAR - POWERSHIFT (AIR)															
								236GDLDX-*4 (1)	250	Opp	63				Furnished
								236GKLDX-*4 (1)	250	Opp	81				Furnished
								236GQLDX-*4 (1)	250	Opp	109				Furnished
								236GULDX-*4 (1)	225	Opp	125				Furnished
GEARED ADAPTERS															
								626GLDX-4LD (1)	250	Eng	0		7-A-300(P)(2)		Furnished
								630GLDX-4LD (1)	250	Eng	0		7-A-300(P)(2)		Furnished
								645GLDX-4LD (1)	250	Eng	0		7-A-300(P)(2)		Furnished

Continued Next Page

NOTE: GEARED ADAPTERS - PTO should be ordered with a STANDARD Stud kit when being mounted to 626G/630G/645G adapter. The bolt holes in the adapters are standard, not metric.

NOTE: GEARED ADAPTERS - the spacer provided with adapter goes between the adapter and PTO.

NOTE: 511/523 Rear Mounts-The adapter noted is furnished with the PTO and does not need to be ordered separately.

(1) Input Gear Part No. 5-P-1434
(2) Filler block furnished with P.T.O.

Parker Hannifin Corporation
Chelsea Products Division
Olive Branch, MS 38654 USA

ET-16109 (Eaton China) Thrushaft use BJ mounting
ET-16110 (Eaton China) Thrushaft use LG mounting
ET-18109 (Eaton China) Thrushaft use BJ mounting
ET-18110 (Eaton China) Thrushaft use LG mounting
ET-20109 (Eaton China) Thrushaft use BJ mounting
ET-20110 (Eaton China) Thrushaft use LG mounting
ETS-16409 (Eaton India) Thrushaft use BJ mounting
ETS-16410 (Eaton India) Thrushaft use LG mounting
ETS-18409 (Eaton India) Thrushaft use BJ mounting
ETS-18410 (Eaton India) Thrushaft use LG mounting
ETS-20409 (Eaton India) Thrushaft use BJ mounting
ETS-20410 (Eaton India) Thrushaft use LG mounting
FTS-16108LL (Eaton Europe/Brazil) Thrushaft use LG mounting
FTS-16109A (Eaton Europe/Brazil) Thrushaft use BJ mounting
FTS-18108LL (Eaton Europe/Brazil) Thrushaft use LG mounting
FTS-18109A (Eaton Europe/Brazil) Thrushaft use BJ mounting
FTS-20108LL (Eaton Europe/Brazil) Thrushaft use LG mounting
FTS-20109A (Eaton Europe/Brazil) Thrushaft use BJ mounting
RTS-11909A (Thrushaft use BJ mounting)

REAR SIDE ONLY

TRANSMISSION GEAR DATA:
REAR 00-BOLT Opening

PITCH LINE TO APERTURE FACE:

Caution: Application Approval Required for PTO Output Shaft Speeds Above 2500 RPM

REAR Side PTO Model	Inter. Torq.	Dir. Rot.	Engine % Fwd.	Engine % Rev.	Filler Block	Adapter Assy.	Stud Kit		Inter. Torq.	Dir. Rot.	Engine % Fwd.	Engine % Rev.	Filler Block	Adapter Assy.	Stud Kit
REAR MOUNT - MECHANICAL SHIFT (10 SPEED TRANSMISSIONS)															
511XRLGW-*-*	590	Opp	70			329752X	Furnished								
523XTLGX-*-*	258	Eng	96			329752X	Furnished								
523XVLGX-*-*	258	Eng	114			329752X	Furnished								
541-LLG-*-*	400	Eng	67				Furnished								
541-MLG-*-*	350	Eng	87				Furnished								
541-NLG-*-*	300	Eng	99				Furnished								
REAR MOUNT - MECHANICAL SHIFT (9 SPEED TRANSMISSIONS)															
523XTBJX--*	258	Eng	96			329751X	Furnished								
523XVBJX--*	258	Eng	114			329751X	Furnished								
541-LBJ-*-	400	Eng	67				Furnished								
541-MBJ-*-	350	Eng	87				Furnished								
541-NBJ-*-	300	Eng	99				Furnished								

NOTE: GEARED ADAPTERS - PTO should be ordered with a STANDARD Stud kit when being mounted to 626G/630G/645G adapter. The bolt holes in the adapters are standard, not metric.

NOTE: GEARED ADAPTERS - the spacer provided with adapter goes between the adapter and PTO.

NOTE: 511/523 Rear Mounts-The adapter noted is furnished with the PTO and does not need to be ordered separately.

Eaton Fuller

Parker Hannifin Corporation
Chelsea Products Division
Olive Branch, MS 38654 USA

RTS-11912L (Thrushaft use LH mounting)

BOTTOM SIDE ONLY

TRANSMISSION GEAR DATA:
BOT 08-BOLT Opening Gear REAR of Centerline
62 Teeth - SPUR

PITCH LINE TO APERTURE FACE:
1.1600" (29.4600MM)

RIGHT SIDE ONLY

TRANSMISSION GEAR DATA:
R.S. 06-BOLT Opening Gear REAR of Centerline
62 Teeth - SPUR

PITCH LINE TO APERTURE FACE:
1.0760" (27.3300MM)

Caution: Application Approval Required for PTO Output Shaft Speeds Above 2500 RPM

BOTTOM Side PTO Model	Inter. Torq.	Dir. Rot.	Engine % Fwd.	Engine % Rev.	Filler Block	Adapter Assy.	Stud Kit	RIGHT Side PTO Model	Inter. Torq.	Dir. Rot.	Engine % Fwd.	Engine % Rev.	Filler Block	Adapter Assy.	Stud Kit
ONE SPEED - TWO GEAR - MECHANICAL SHIFT															
489ELLEX-*4 (1)	184	Opp	92				Furnished	442GLLEX-*4 (1)	250	Opp	86				Furnished
489EQLEX-*4 (1)	225	Opp	92				Furnished	442GQLEX-*4 (1)	225	Opp	92				Furnished
489ERLEX-*4 (1)	225	Opp	107				Furnished	442GRLEX-*4 (1)	225	Opp	107				Furnished
489ESLEX-*4 (1)	200	Opp	127				Furnished	442GSLEX-*4 (1)	200	Opp	127				Furnished
489EULEX-*4 (1)	195	Opp	152				Furnished	442GULEX-*4 (1)	195	Opp	152				Furnished
489EWLEX-*4 (1)	175	Opp	178				Furnished	442GWLEX-*4 (1)	175	Opp	178				Furnished
489EXLEX-*4 (1)	140	Opp	211				Furnished	442GXLEX-*4 (1)	140	Opp	211				Furnished
680EQLEX-*4 (1)	295	Opp	92				Furnished	660GQLEX-*4 (1)	295	Opp	92				Furnished
680ERLEX-*4 (1)	295	Opp	107				Furnished	660GRLEX-*4 (1)	295	Opp	107				Furnished
680ESLEX-*4 (1)	295	Opp	127				Furnished	660GSLEX-*4 (1)	295	Opp	127				Furnished
ONE SPEED - TWO GEAR - POWERSHIFT (AIR)															
								236GDLEX-*4 (1)	250	Opp	69				Furnished
								236GKLEX-*4 (1)	250	Opp	89				Furnished
								236GQLEX-*4 (1)	250	Opp	120				Furnished
								236GULEX-*4 (1)	225	Opp	137				Furnished
GEARED ADAPTERS															
								626GLEX-4LE (1)	250	Eng	0		7-A-093(P)(2)		Furnished
								630GLEX-4LE (1)	250	Eng	0		7-A-093(P)(2)		Furnished
								645GLEX-4LE (1)	250	Eng	0		7-A-093(P)(2)		Furnished

Continued Next Page

NOTE: GEARED ADAPTERS - PTO should be ordered with a STANDARD Stud kit when being mounted to 626G/630G/645G adapter. The bolt holes in the adapters are standard, not metric.

NOTE: GEARED ADAPTERS - the spacer provided with adapter goes between the adapter and PTO.

NOTE: 511/523 Rear Mounts - The adapter noted is furnished with the PTO and does not need to be ordered separately.

(1) Input Gear Part No. 5-P-1431
(2) Filler block furnished with P.T.O.

Parker Hannifin Corporation
Chelsea Products Division
Olive Branch, MS 38654 USA

RTS-11912L (Thrushaft use LH mounting)

REAR SIDE ONLY

TRANSMISSION GEAR DATA:
REAR 00-BOLT Opening

PITCH LINE TO APERTURE FACE:

Caution: Application Approval Required for PTO Output Shaft Speeds Above 2500 RPM

REAR Side PTO Model	Inter. Torq.	Dir. Rot.	Engine %		Filler Block	Adapter Assy.	Stud Kit		Inter. Torq.	Dir. Rot.	Engine %		Filler Block	Adapter Assy.	Stud Kit
			Fwd.	Rev.							Fwd.	Rev.			

REAR MOUNT - MECHANICAL SHIFT (13 SPEED TRANSMISSIONS)

541-LLH-*-*	400	Eng	67			Furnished									
541-MLH-*-*	350	Eng	87			Furnished									
541-NLH-*-*	300	Eng	99			Furnished									

NOTE: GEARED ADAPTERS - PTO should be ordered with a STANDARD Stud kit when being mounted to 626G/630G/645G adapter. The bolt holes in the adapters are standard, not metric.

NOTE: GEARED ADAPTERS - the spacer provided with adapter goes between the adapter and PTO.

NOTE: 511/523 Rear Mounts - The adapter noted is furnished with the PTO and does not need to be ordered separately.

Eaton Fuller

Parker Hannifin Corporation
Chelsea Products Division
Olive Branch, MS 38654 USA

FA-11810B (Advantage Series)
FA-12810B (Advantage Series)
FA-13810B (Advantage Series)
FA-14810B (Advantage Series)
FA-15810B (Advantage Series)
FA-9810B (Advantage Series)
FAF-11810B (Advantage Series)
FAF-12810B (Advantage Series)
FAF-13810B (Advantage Series)
FAF-14810B (Advantage Series)
FAF-15810B (Advantage Series)
FAF-9810B (Advantage Series)
FAM-14810B (Advantage Series)
FAM-15810B (Advantage Series)
FAMF-14810B (Advantage Series)
FAMF-15810B (Advantage Series)

BOTTOM SIDE ONLY

TRANSMISSION GEAR DATA:
BOT 08-BOLT Opening Gear FORWARD of Centerline
47 Teeth - SPUR

PITCH LINE TO APERTURE FACE:
0.8050" (20.4500MM)

RIGHT SIDE ONLY

TRANSMISSION GEAR DATA:
R.S. 06-BOLT Opening Gear FORWARD of Centerline
45 Teeth - SPUR

PITCH LINE TO APERTURE FACE:
1.0850" (27.5600MM)

Caution: Application Approval Required for PTO Output Shaft Speeds Above 2500 RPM

ONE SPEED - TWO GEAR - MECHANICAL SHIFT

BOTTOM Side PTO Model	Inter. Torq.	Dir. Rot.	Engine % Fwd.	Engine % Rev.	Filler Block	Adapter Assy.	Stud Kit	RIGHT Side PTO Model	Inter. Torq.	Dir. Rot.	Engine % Fwd.	Engine % Rev.	Filler Block	Adapter Assy.	Stud Kit
221ZCAHX-*3	250	Opp	61		7-A-032(P)(29)	328564X	Furnished	221XCAHX-*3	250	Opp	58		7-A-032(29)		Furnished
221ZEAHX-*3	250	Opp	70			328564X	Furnished	221XEAHX-*3	250	Opp	67				Furnished
221ZLAHX-*3	200	Opp	95			328564X	Furnished	221XLAHX-*3	200	Opp	91				Furnished
221ZPAHX-*3	200	Opp	114			328564X	Furnished	221XPAHX-*3	200	Opp	110				Furnished
489XAAHX-*5 (12)	250	Opp	54				Furnished	442XAAHX-*3 (12)	250	Opp	51				Furnished
489XCAHX-*5 (13)	250	Opp	69				Furnished	442XBAHX-*3 (18)	250	Eng	51			REQUIRED	Furnished
489XFAHX-*5 (2)	250	Opp	85				Furnished	442XCAHX-*3 (13)	250	Opp	66				Furnished
489XHAHX-*5 (15)	250	Opp	99				Furnished	442XFAHX-*3 (2)	250	Opp	81				Furnished
489XLAHX-*5 (1)	250	Opp	110				Furnished	442XHAHX-*3 (15)	250	Opp	94				Furnished
489XQAHX-*5 (1)	225	Opp	118				Furnished	442XLAHX-*3 (1)	250	Opp	105				Furnished
489XRAHX-*5 (1)	225	Opp	137				Furnished	442XQAHX-*3 (1)	225	Opp	113				Furnished
489XSAHX-*5 (1)	200	Opp	163				Furnished	442XRAHX-*3 (1)	225	Opp	131				Furnished
489XUAHX-*5 (1)	195	Opp	194				Furnished	442XSAHX-*3 (1)	200	Opp	156				Furnished
489XWAHX-*5 (1)	175	Opp	229				Furnished	442XUAHX-*3 (1)	195	Opp	186				Furnished
489XXAHX-*5 (1)	140	Opp	271				Furnished	442XWAHX-*3 (1)	175	Opp	219				Furnished
680XFAHX-*3 (10)	375	Opp	85				Furnished	442XXAHX-*3 (1)	140	Opp	259				Furnished
680XHAHX-*3 (21)	375	Opp	99				Furnished	660XFAHX-*3 (10)	375	Opp	81				Furnished
680XQAHX-*3 (11)	375	Opp	118				Furnished	660XHAHX-*3 (15)	375	Opp	94				Furnished
680XRAHX-*3 (19)	350	Opp	137				Furnished	660XQAHX-*3 (11)	375	Opp	113				Furnished
680XSAHX-*3 (14)	322	Opp	163				Furnished	660XRAHX-*3 (19)	350	Opp	131				Furnished
823XBAHX-*3 (27)	750	Opp	69				Furnished	660XSAHX-*3 (14)	336	Opp	156				Furnished
823XDAHX-*3 (23)	750	Opp	58				Furnished								
823XGAHX-*3 (28)	705	Opp	74				Furnished								
823XJAHX-*3 (24)	599	Opp	88				Furnished								
823XMAHX-*3 (22)	511	Opp	103				Furnished								
823XRAHX-*3 (26)	370	Opp	142				Furnished								
823XTKTX-*3 (17)	305	Opp	172		8-A-165(29)		Furnished								
880XBAHX-*3 (3)	500	Opp	58				Furnished								
880XDAHX-*3 (4)	500	Opp	69				Furnished								
880XGAHX-*3 (9)	500	Opp	74				Furnished								
880XJAHX-*3 (5)	500	Opp	88				Furnished								
880XMAHX-*3 (6)	500	Opp	103				Furnished								

Continued Next Page

CAUTION: INPUT SIGNAL REQUIRED: In any case a PTO is used, regardless of PTO style, the transmission must have an input signal from the PTO when it is active. Eaton requires the OEM to provide a "PTO Active" input connection to the transmission ECU. Refer to the Vehicle OEM for wire connection information and to EATON TRIG2600 for Transmission/PTO Operations.

CAUTION: 660/680 Series: Applications above 1500 RPM output shaft speed, contact Chelsea Technical Service for approval. DO NOT use Standard Geared Adapters w/660 Series, contact Chelsea Technical Service.

NOTE: The 442XBAH must use one of the geared adapters listed on the application page. The direction of rotation shown is the final output shaft rotation w/ geared adapter.

NOTE: Optional front mount oil filter will interfere with 6-Bolt P.T.O installations. Rear or remote mount filter must be used.

NOTE: All PTO Torque Values Reflect the Higher Torque 750 Ft-lb [1017 Nm] Main Transmission Input Bearing for Intermittent Duty Cycles as Standard from Eaton for the Transmissions Listed for this Page. For Continuous Duty Cycles do not exceed 500 Ft-lb [678 Nm.] . Refer to the Chelsea PTO Torque Limit Chart in the front of this section for complete torque limit information.

(1) Input Gear Part No. 5-P-1004
(2) Input Gear Part No. 5-P-1077
(3) Input Gear Part No. 5-P-1100
(4) Input Gear Part No. 5-P-1101
(5) Input Gear Part No. 5-P-1102
(6) Input Gear Part No. 5-P-1103
(9) Input Gear Part No. 5-P-1135
(10) Input Gear Part No. 5-P-1242
(11) Input Gear Part No. 5-P-1246
(12) Input Gear Part No. 5-P-1280
(13) Input Gear Part No. 5-P-1287
(14) Input Gear Part No. 5-P-1322
(15) Input Gear Part No. 5-P-1364
(17) Input Gear Part No. 5-P-1395
(18) Input Gear Part No. 5-P-1418
(19) Input Gear Part No. 5-P-1441
(21) Input Gear Part No. 5-P-1494
(22) Input Gear Part No. 5-P-283
(23) Input Gear Part No. 5-P-285
(24) Input Gear Part No. 5-P-325
(26) Input Gear Part No. 5-P-721
(27) Input Gear Part No. 5-P-971
(28) Input Gear Part No. 5-P-980
(29) Filler block furnished with P.T.O.

Parker Hannifin Corporation
Chelsea Products Division
Olive Branch, MS 38654 USA

FA-11810B (Advantage Series)
FA-12810B (Advantage Series)
FA-13810B (Advantage Series)
FA-14810B (Advantage Series)
FA-15810B (Advantage Series)
FA-9810B (Advantage Series)
FAF-11810B (Advantage Series)
FAF-12810B (Advantage Series)
FAF-13810B (Advantage Series)
FAF-14810B (Advantage Series)
FAF-15810B (Advantage Series)
FAF-9810B (Advantage Series)
FAM-14810B (Advantage Series)
FAM-15810B (Advantage Series)
FAMF-14810B (Advantage Series)
FAMF-15810B (Advantage Series)

BOTTOM SIDE ONLY

TRANSMISSION GEAR DATA:
BOT 08-BOLT Opening Gear FORWARD of Centerline
47 Teeth - SPUR

PITCH LINE TO APERTURE FACE:
0.8050" (20.4500MM)

RIGHT SIDE ONLY

TRANSMISSION GEAR DATA:
R.S. 06-BOLT Opening Gear FORWARD of Centerline
45 Teeth - SPUR

PITCH LINE TO APERTURE FACE:
1.0850" (27.5600MM)

Caution: Application Approval Required for PTO Output Shaft Speeds Above 2500 RPM

BOTTOM Side PTO Model	Inter. Torq.	Dir. Rot.	Engine % Fwd.	Engine % Rev.	Filler Block	Adapter Assy.	Stud Kit	RIGHT Side PTO Model	Inter. Torq.	Dir. Rot.	Engine % Fwd.	Engine % Rev.	Filler Block	Adapter Assy.	Stud Kit
ONE SPEED - TWO GEAR - MECHANICAL SHIFT															
880XQAHX-*3 (16)	435	Opp	120				Furnished								
880XRAHX-*3 (7)	370	Opp	142				Furnished								
880XTAHX-*3 (8)	287	Opp	183				Furnished								
ONE SPEED - TWO GEAR POWERSHIFT (AIR OR HYDRAULIC)															
282XBAJX-*3	300	Opp	58				Furnished	272XAAJX-*3	300	Opp	45				Furnished
282XCAJX-*3	300	Opp	70				Furnished	272XBAJX-*3	300	Opp	55				Furnished
282XDAJX-*3	300	Opp	84				Furnished	272XCAJX-*3	300	Opp	67				Furnished
282XGAJX-*3	300	Opp	100				Furnished	272XDAJX-*3	300	Opp	80				Furnished
282XKAJX-*3	300	Opp	111				Furnished	272XGAJX-*3	300	Opp	95				Furnished
282XMAJX-*3	300	Opp	124				Furnished	272XKAJX-*3	300	Opp	107				Furnished
282XPAJX-*3	300	Opp	156				Furnished	272XMAJX-*3	300	Opp	119				Furnished
282XSAJX-*3	300	Opp	149				Furnished	272XPAJX-*3	300	Opp	133				Furnished
282XTAJX-*3	300	Opp	174				Furnished	272XSAJX-*3	300	Opp	149				Furnished
ONE SPEED - TWO GEAR - POWERSHIFT (AIR)															
230XAAJX-*3	250	Opp	45			328481X	Furnished	230XAAJX-*3	250	Opp	43				Furnished
230XBAJX-*3	250	Opp	58			328481X	Furnished	230XBAJX-*3	250	Opp	56				Furnished
230XDAJX-*3	250	Opp	67			328481X	Furnished	230XDAJX-*3	250	Opp	64				Furnished
230XKAJX-*3	250	Opp	91			328481X	Furnished	230XKAJX-*3	250	Opp	87				Furnished
230XQAJX-*3	250	Opp	121			328481X	Furnished	230XQAJX-*3	250	Opp	116				Furnished
230XUAJX-*3	200	Opp	194			328481X	Furnished	230XUAJX-*3	218	Opp	185				Furnished
238XAAHX-*3 (20)	250	Opp	59				Furnished	236XAAHX-*3 (20)	250	Opp	57				Furnished
238XDAHX-*3 (1)	250	Opp	89				Furnished	236XDAHX-*3 (1)	250	Opp	85				Furnished
238XKAHX-*3 (1)	250	Opp	114				Furnished	236XKAHX-*3 (1)	250	Opp	109				Furnished
238XQAHX-*3 (1)	250	Opp	154				Furnished	236XQAHX-*3 (1)	250	Opp	147				Furnished
238XUAHX-*3 (1)	225	Opp	176				Furnished	236XUAHX-*3 (1)	225	Opp	168				Furnished
885XBAHX-*3 (3)	500	Opp	58				Furnished								
885XGAHX-*3 (9)	500	Opp	74				Furnished								
885XJAHX-*3 (5)	500	Opp	88				Furnished								
885XMAHX-*3 (6)	500	Opp	103				Furnished								

Continued Next Page

CAUTION: INPUT SIGNAL REQUIRED: In any case a PTO is used, regardless of PTO style, the transmission must have an input signal from the PTO when it is active. Eaton requires the OEM to provide a "PTO Active" input connection to the transmission ECU. Refer to the Vehicle OEM for wire connection information and to EATON TRIG2600 for Transmission/PTO Operations.

CAUTION: 660/680 Series: Applications above 1500 RPM output shaft speed, contact Chelsea Technical Service for approval. DO NOT use Standard Geared Adapters w/660 Series, contact Chelsea Technical Service.

NOTE: The 442XBAH must use one of the geared adapters listed on the application page. The direction of rotation shown is the final output shaft rotation w/ geared adapter.

NOTE: Optional front mount oil filter will interfere with 6-Bolt P.T.O installations. Rear or remote mount filter must be used.

NOTE: All PTO Torque Values Reflect the Higher Torque 750 Ft-lb [1017 Nm] Main Transmission Input Bearing for Intermittent Duty Cycles as Standard from Eaton for the Transmissions Listed for this Page. For Continuous Duty Cycles do not exceed 500 Ft-lb [678 Nm.] . Refer to the Chelsea PTO Torque Limit Chart in the front of this section for complete torque limit information.

(1) Input Gear Part No. 5-P-1004
(3) Input Gear Part No. 5-P-1100
(5) Input Gear Part No. 5-P-1102
(6) Input Gear Part No. 5-P-1103
(7) Input Gear Part No. 5-P-1104
(8) Input Gear Part No. 5-P-1105
(9) Input Gear Part No. 5-P-1135
(16) Input Gear Part No. 5-P-1385
(20) Input Gear Part No. 5-P-1486

Parker Hannifin Corporation
Chelsea Products Division
Olive Branch, MS 38654 USA

FA-11810B (Advantage Series)
FA-12810B (Advantage Series)
FA-13810B (Advantage Series)
FA-14810B (Advantage Series)
FA-15810B (Advantage Series)
FA-9810B (Advantage Series)
FAF-11810B (Advantage Series)
FAF-12810B (Advantage Series)
FAF-13810B (Advantage Series)
FAF-14810B (Advantage Series)
FAF-15810B (Advantage Series)
FAF-9810B (Advantage Series)
FAM-14810B (Advantage Series)
FAM-15810B (Advantage Series)
FAMF-14810B (Advantage Series)
FAMF-15810B (Advantage Series)

BOTTOM SIDE ONLY

TRANSMISSION GEAR DATA:
BOT 08-BOLT Opening Gear FORWARD of Centerline
47 Teeth - SPUR

PITCH LINE TO APERTURE FACE:
0.8050" (20.4500MM)

RIGHT SIDE ONLY

TRANSMISSION GEAR DATA:
R.S. 06-BOLT Opening Gear FORWARD of Centerline
45 Teeth - SPUR

PITCH LINE TO APERTURE FACE:
1.0850" (27.5600MM)

Caution: Application Approval Required for PTO Output Shaft Speeds Above 2500 RPM

BOTTOM Side PTO Model	Inter. Torq.	Dir. Rot.	Engine % Fwd.	Engine % Rev.	Filler Block	Adapter Assy.	Stud Kit	RIGHT Side PTO Model	Inter. Torq.	Dir. Rot.	Engine % Fwd.	Engine % Rev.	Filler Block	Adapter Assy.	Stud Kit
ONE SPEED - FORWARD & REVERSE															
348XFAHX-*5 (25)	200	Opp	74	78			Furnished	340XFAHX-*5 (25)	200	Opp	71	75	7-A-140(29)		Furnished
352ZSAHX-*3 (1)	140	Opp	165	214		328564X	Furnished	352XSAHX-*3 (1)	140	Opp	158	205			Furnished
863XBAHX-*5	423	Opp	58	72			Furnished								
GEARED ADAPTERS															
628XAHX-4AH	250	Eng	0		8-A-032		Furnished	626XAHX-3AH	250	Eng	0				Furnished
								630-02	250	Eng	0				Furnished
								630XAHX-3AH	250	Eng	0				Furnished
								645XAHX-3AH	250	Eng	0				Furnished

Continued Next Page

CAUTION: INPUT SIGNAL REQUIRED: In any case a PTO is used, regardless of PTO style, the transmission must have an input signal from the PTO when it is active. Eaton requires the OEM to provide a "PTO Active" input connection to the transmission ECU. Refer to the Vehicle OEM for wire connection information and to EATON TRIG2600 for Transmission/PTO Operations.

CAUTION: 660/680 Series: Applications above 1500 RPM output shaft speed, contact Chelsea Technical Service for approval. DO NOT use Standard Geared Adapters w/660 Series, contact Chelsea Technical Service.

NOTE: The 442XBAH must use one of the geared adapters listed on the application page. The direction of rotation shown is the final output shaft rotation w/ geared adapter.

NOTE: Optional front mount oil filter will interfere with 6-Bolt P.T.O installations. Rear or remote mount filter must be used.

NOTE: All PTO Torque Values Reflect the Higher Torque 750 Ft-lb [1017 Nm] Main Transmission Input Bearing for Intermittent Duty Cycles as Standard from Eaton for the Transmissions Listed for this Page. For Continuous Duty Cycles do not exceed 500 Ft-lb [678 Nm.] . Refer to the Chelsea PTO Torque Limit Chart in the front of this section for complete torque limit information.

(1) Input Gear Part No. 5-P-1004
(25) Input Gear Part No. 5-P-581
(29) Filler block furnished with P.T.O.

Parker Hannifin Corporation
Chelsea Products Division
Olive Branch, MS 38654 USA

FA-11810B (Advantage Series)
FA-12810B (Advantage Series)
FA-13810B (Advantage Series)
FA-14810B (Advantage Series)
FA-15810B (Advantage Series)
FA-9810B (Advantage Series)
FAF-11810B (Advantage Series)
FAF-12810B (Advantage Series)
FAF-13810B (Advantage Series)
FAF-14810B (Advantage Series)
FAF-15810B (Advantage Series)
FAF-9810B (Advantage Series)
FAM-14810B (Advantage Series)
FAM-15810B (Advantage Series)
FAMF-14810B (Advantage Series)
FAMF-15810B (Advantage Series)

REAR SIDE ONLY

TRANSMISSION GEAR DATA:
REAR 00-BOLT Opening

PITCH LINE TO APERTURE FACE:

Caution: Application Approval Required for PTO Output Shaft Speeds Above 2500 RPM

REAR Side PTO Model	Inter. Torq.	Dir. Rot.	Engine %		Filler Block	Adapter Assy.	Stud Kit		Inter. Torq.	Dir. Rot.	Engine %		Filler Block	Adapter Assy.	Stud Kit
			Fwd.	Rev.							Fwd.	Rev.			

REAR MOUNT - MECHANICAL SHIFT (10 SPEED TRANSMISSIONS)

541-LAT-*-*	400	Eng	67			Furnished									
541-MAT-*-*	350	Eng	87			Furnished									
541-NAT-*-*	300	Eng	99			Furnished									

CAUTION: INPUT SIGNAL REQUIRED: In any case a PTO is used, regardless of PTO style, the transmission must have an input signal from the PTO when it is active. Eaton requires the OEM to provide a "PTO Active" input connection to the transmission ECU. Refer to the Vehicle OEM for wire connection information and to EATON TRIG2600 for Transmission/PTO Operations.

CAUTION: 660/680 Series: Applications above 1500 RPM output shaft speed, contact Chelsea Technical Service for approval. DO NOT use Standard Geared Adapters w/660 Series, contact Chelsea Technical Service.

NOTE: The 442XBAH must use one of the geared adapters listed on the application page. The direction of rotation shown is the final output shaft rotation w/ geared adapter.

NOTE: Optional front mount oil filter will interfere with 6-Bolt P.T.O installations. Rear or remote mount filter must be used.

NOTE: All PTO Torque Values Reflect the Higher Torque 750 Ft-lb [1017 Nm] Main Transmission Input Bearing for Intermittent Duty Cycles as Standard from Eaton for the Transmissions Listed for this Page. For Continuous Duty Cycles do not exceed 500 Ft-lb [678 Nm.] . Refer to the Chelsea PTO Torque Limit Chart in the front of this section for complete torque limit information.

Parker Hannifin Corporation
Chelsea Products Division
Olive Branch, MS 38654 USA

FO-10E308LL-VCS (UltraShift Plus) Thrushaft use BD mounting
FO-11E308LL-VCS (UltraShift Plus) Thrushaft use BD mounting
FO-12E308LL-VCS (UltraShift Plus) Thrushaft use BD mounting
FO-14E308LL-VCS (UltraShift Plus) Thrushaft use BD mounting
FO-16E308LL-VCS (UltraShift Plus) Thrushaft use BD mounting
FO-17E308LL-VCS (UltraShift Plus) Thrushaft use BD Mounting

BOTTOM SIDE ONLY

TRANSMISSION GEAR DATA:
BOT 08-BOLT Opening Gear FORWARD of Centerline
47 Teeth - SPUR

PITCH LINE TO APERTURE FACE:
0.8050" (20.4500MM)

RIGHT SIDE ONLY

TRANSMISSION GEAR DATA:
R.S. 06-BOLT Opening Gear FORWARD of Centerline
45 Teeth - SPUR

PITCH LINE TO APERTURE FACE:
1.0850" (27.5600MM)

Caution: Application Approval Required for PTO Output Shaft Speeds Above 2500 RPM

ONE SPEED - TWO GEAR - MECHANICAL SHIFT

BOTTOM Side PTO Model	Inter. Torq.	Dir. Rot.	Engine % Fwd.	Engine % Rev.	Filler Block	Adapter Assy.	Stud Kit	RIGHT Side PTO Model	Inter. Torq.	Dir. Rot.	Engine % Fwd.	Engine % Rev.	Filler Block	Adapter Assy.	Stud Kit
221ZCAHX-*3	250	Opp	82		7-A-032(P)(28)	328564X	Furnished	221XCAHX-*3	250	Opp	79		7-A-032(28)		Furnished
221ZEAHX-*3	250	Opp	95			328564X	Furnished	221XEAHX-*3	250	Opp	91				Furnished
221ZLAHX-*3	200	Opp	128			328564X	Furnished	221XLAHX-*3	200	Opp	122				Furnished
221ZPAHX-*3	200	Opp	154			328564X	Furnished	221XPAHX-*3	200	Opp	148				Furnished
489XAAHX-*5 (11)	250	Opp	72				Furnished	442XAAHX-*3 (11)	250	Opp	69				Furnished
489XCAHX-*5 (12)	250	Opp	93				Furnished	442XBAHX-*3 (17)	250	Eng	69			REQUIRED	Furnished
489XFAHX-*5 (2)	250	Opp	114				Furnished	442XCAHX-*3 (12)	250	Opp	89				Furnished
489XHAHX-*5 (14)	250	Opp	132				Furnished	442XFAHX-*3 (2)	250	Opp	110				Furnished
489XLAHX-*5 (1)	250	Opp	148				Furnished	442XHAHX-*3 (14)	250	Opp	127				Furnished
489XQAHX-*5 (1)	225	Opp	160				Furnished	442XLAHX-*3 (1)	250	Opp	142				Furnished
489XRAHX-*5 (1)	220	Opp	185				Furnished	442XQAHX-*3 (1)	225	Opp	153				Furnished
489XSAHX-*5 (1)	155	Opp	220				Furnished	442XRAHX-*3 (1)	225	Opp	177				Furnished
489XUAHX-*5 (1)	110	Opp	262				Furnished	442XSAHX-*3 (1)	170	Opp	211				Furnished
489XWAHX-*5 (1)	80	Opp	308				Furnished	442XUAHX-*3 (1)	120	Opp	251				Furnished
489XXAHX-*5 (1)	55	Opp	365				Furnished	442XWAHX-*3 (1)	87	Opp	295				Furnished
680XFAHX-*3 (9)	375	Opp	114				Furnished	442XXAHX-*3 (1)	62	Opp	349				Furnished
680XHAHX-*3 (20)	375	Opp	132				Furnished	660XFAHX-*3 (9)	375	Opp	110				Furnished
680XQAHX-*3 (10)	295	Opp	160				Furnished	660XHAHX-*3 (14)	375	Opp	127				Furnished
680XRAHX-*3 (18)	220	Opp	185				Furnished	660XQAHX-*3 (10)	320	Opp	153				Furnished
680XSAHX-*3 (13)	155	Opp	220				Furnished	660XRAHX-*3 (18)	240	Opp	177				Furnished
823XBAHX-*3 (22)	500	Opp	78				Furnished	660XSAHX-*3 (13)	170	Opp	211				Furnished
823XDAHX-*3 (26)	500	Opp	92				Furnished								
823XGAHX-*3 (27)	500	Opp	100				Furnished								
823XJAHX-*3 (23)	500	Opp	118				Furnished								
823XMAHX-*3 (21)	511	Opp	139				Furnished								
823XRAHX-*3 (25)	205	Opp	191				Furnished								
823XTKTX-*3 (16)	140	Opp	231		8-A-165(28)		Furnished								
880XBAHX-*3 (3)	500	Opp	78				Furnished								
880XDAHX-*3 (4)	500	Opp	92				Furnished								
880XGAHX-*3 (8)	500	Opp	100				Furnished								
880XJAHX-*3 (5)	500	Opp	118				Furnished								
880XMAHX-*3 (6)	390	Opp	139				Furnished								

Continued Next Page

CAUTION: INPUT SIGNAL REQUIRED - The Eaton UltraShift Plus transmission must have an input signal from the Power Take-Off when it is active. In this active state, the clutch engagement is controlled when the operator raises the engine speed to engage the clutch and drive the transmission main box countershaft. per EATON spec. "TRIG-2600". INCORRECT or NO PTO interface signal to the transmission will result in uncontrolled engagement of the clutch during PTO operation.

CAUTION: 660/680 SERIES: Applications above 1500 RPM output shaft speed, contact Chelsea Technical Service for approval. DO NOT use Standard Geared Adapters w/660 Series, contact Chelsea Technical Service.

NOTE: The Eaton Inertia Brake comes standard and is internal to the transmission.

NOTE: The 442XBAH must use one of the geared adapters listed on the application page. The direction of rotation shown is the final output shaft rotation w/ geared adapter.

NOTE: Eaton Fuller will provide a dump pump bracket (Eaton Part#4306528) as standard on -VCS,-VMS and -VXP transmission models for the bottom 8-Bolt opening and optional on -LAS,-MHP and -MXP model transmissions.

NOTE: All PTO Torque Values Reflect the Higher Torque 750 Ft-lb [1017 Nm] Main Transmission Input Bearing for Intermittent Duty Cycles as Standard from Eaton for the Transmissions Listed for this Page. For Continuous Duty Cycles do not exceed 500 Ft-lb [678 Nm.] . Refer to the Chelsea PTO Torque Limit Chart in the front of this section for complete torque limit information.

(1) Input Gear Part No. 5-P-1004
(2) Input Gear Part No. 5-P-1077
(3) Input Gear Part No. 5-P-1100
(4) Input Gear Part No. 5-P-1101
(5) Input Gear Part No. 5-P-1102
(6) Input Gear Part No. 5-P-1103
(8) Input Gear Part No. 5-P-1135
(9) Input Gear Part No. 5-P-1242
(10) Input Gear Part No. 5-P-1246
(11) Input Gear Part No. 5-P-1280
(12) Input Gear Part No. 5-P-1287
(13) Input Gear Part No. 5-P-1322
(14) Input Gear Part No. 5-P-1364
(16) Input Gear Part No. 5-P-1395
(17) Input Gear Part No. 5-P-1418
(18) Input Gear Part No. 5-P-1441
(20) Input Gear Part No. 5-P-1494
(21) Input Gear Part No. 5-P-283
(22) Input Gear Part No. 5-P-285
(23) Input Gear Part No. 5-P-325
(25) Input Gear Part No. 5-P-721
(26) Input Gear Part No. 5-P-971
(27) Input Gear Part No. 5-P-980
(28) Filler block furnished with P.T.O.

Parker Hannifin Corporation
Chelsea Products Division
Olive Branch, MS 38654 USA

FO-10E308LL-VCS (UltraShift Plus) Thrushaft use BD mounting
FO-11E308LL-VCS (UltraShift Plus) Thrushaft use BD mounting
FO-12E308LL-VCS (UltraShift Plus) Thrushaft use BD mounting
FO-14E308LL-VCS (UltraShift Plus) Thrushaft use BD mounting
FO-16E308LL-VCS (UltraShift Plus) Thrushaft use BD mounting
FO-17E308LL-VCS (UltraShift Plus) Thrushaft use BD Mounting

BOTTOM SIDE ONLY

TRANSMISSION GEAR DATA:
BOT 08-BOLT Opening Gear FORWARD of Centerline
47 Teeth - SPUR

PITCH LINE TO APERTURE FACE:
0.8050" (20.4500MM)

RIGHT SIDE ONLY

TRANSMISSION GEAR DATA:
R.S. 06-BOLT Opening Gear FORWARD of Centerline
45 Teeth - SPUR

PITCH LINE TO APERTURE FACE:
1.0850" (27.5600MM)

Caution: Application Approval Required for PTO Output Shaft Speeds Above 2500 RPM

BOTTOM Side PTO Model	Inter. Torq.	Dir. Rot.	Engine % Fwd.	Engine % Rev.	Filler Block	Adapter Assy.	Stud Kit	RIGHT Side PTO Model	Inter. Torq.	Dir. Rot.	Engine % Fwd.	Engine % Rev.	Filler Block	Adapter Assy.	Stud Kit
ONE SPEED - TWO GEAR - MECHANICAL SHIFT															
880XQAHX-*3 (15)	280	Opp	162				Furnished								
880XRAHX-*3 (7)	205	Opp	191				Furnished								
ONE SPEED - TWO GEAR POWERSHIFT (AIR OR HYDRAULIC)															
282XBAJX-*3	300	Opp	78				Furnished	272XAAJX-*3	300	Opp	61				Furnished
282XCAJX-*3	300	Opp	94				Furnished	272XBAJX-*3	300	Opp	75				Furnished
282XDAJX-*3	300	Opp	113				Furnished	272XCAJX-*3	300	Opp	90				Furnished
282XGAJX-*3	300	Opp	134				Furnished	272XDAJX-*3	300	Opp	108				Furnished
282XKAJX-*3	300	Opp	144				Furnished	272XGAJX-*3	300	Opp	128				Furnished
282XMAJX-*3	281	Opp	168				Furnished	272XKAJX-*3	300	Opp	150				Furnished
282XPAJX-*3	252	Opp	188				Furnished	272XMAJX-*3	300	Opp	161				Furnished
282XSAJX-*3	225	Opp	210				Furnished	272XPAJX-*3	300	Opp	180				Furnished
282XTAJX-*3	201	Opp	235				Furnished	272XSAJX-*3	300	Opp	201				Furnished
ONE SPEED - TWO GEAR - POWERSHIFT (AIR)															
230XAAJX-*3	250	Opp	60			328481X	Furnished	230XAAJX-*3	250	Opp	58				Furnished
230XBAJX-*3	250	Opp	78			328481X	Furnished	230XBAJX-*3	250	Opp	75				Furnished
230XDAJX-*3	250	Opp	91			328481X	Furnished	230XDAJX-*3	250	Opp	87				Furnished
230XKAJX-*3	250	Opp	123			328481X	Furnished	230XKAJX-*3	250	Opp	117				Furnished
230XQAJX-*3	250	Opp	163			328481X	Furnished	230XQAJX-*3	250	Opp	156				Furnished
230XUAJX-*3	110	Opp	261			328481X	Furnished	230XUAJX-*3	120	Opp	250				Furnished
238XAAHX-*3 (19)	250	Opp	80				Furnished	236XAAHX-*3 (19)	250	Opp	76				Furnished
238XDAHX-*3 (1)	250	Opp	120				Furnished	236XDAHX-*3 (1)	250	Opp	115				Furnished
238XKAHX-*3 (1)	250	Opp	154				Furnished	236XKAHX-*3 (1)	250	Opp	147				Furnished
238XQAHX-*3 (1)	175	Opp	207				Furnished	236XQAHX-*3 (1)	190	Opp	198				Furnished
238XUAHX-*3 (1)	134	Opp	237				Furnished	236XUAHX-*3 (1)	145	Opp	227				Furnished
885XBAHX-*3 (3)	500	Opp	78				Furnished								
885XGAHX-*3 (8)	500	Opp	100				Furnished								
885XJAHX-*3 (5)	500	Opp	118				Furnished								
885XMAHX-*3 (6)	395	Opp	139				Furnished								

Continued Next Page

CAUTION: INPUT SIGNAL REQUIRED - The Eaton UltraShift Plus transmission must have an input signal from the Power Take-Off when it is active. In this active state, the clutch engagement is controlled when the operator raises the engine speed to engage the clutch and drive the transmission main box countershaft. per EATON spec. "TRIG-2600". INCORRECT or NO PTO interface signal to the transmission will result in uncontrolled engagement of the clutch during PTO operation.

CAUTION: 660/680 SERIES: Applications above 1500 RPM output shaft speed, contact Chelsea Technical Service for approval. DO NOT use Standard Geared Adapters w/660 Series, contact Chelsea Technical Service.

NOTE: The Eaton Inertia Brake comes standard and is internal to the transmission.

NOTE: The 442XBAH must use one of the geared adapters listed on the application page. The direction of rotation shown is the final output shaft rotation w/ geared adapter.

NOTE: Eaton Fuller will provide a dump pump bracket (Eaton Part#4306528) as standard on -VCS,-VMS and -VXP transmission models for the bottom 8-Bolt opening and optional on -LAS,-MHP and -MXP model transmissions.

NOTE: All PTO Torque Values Reflect the Higher Torque 750 Ft-lb [1017 Nm] Main Transmission Input Bearing for Intermittent Duty Cycles as Standard from Eaton for the Transmissions Listed for this Page. For Continuous Duty Cycles do not exceed 500 Ft-lb [678 Nm.] . Refer to the Chelsea PTO Torque Limit Chart in the front of this section for complete torque limit information.

(1) Input Gear Part No. 5-P-1004
(3) Input Gear Part No. 5-P-1100
(5) Input Gear Part No. 5-P-1102
(6) Input Gear Part No. 5-P-1103
(7) Input Gear Part No. 5-P-1104
(8) Input Gear Part No. 5-P-1135
(15) Input Gear Part No. 5-P-1385
(19) Input Gear Part No. 5-P-1486

Parker Hannifin Corporation
Chelsea Products Division
Olive Branch, MS 38654 USA

FO-10E308LL-VCS (UltraShift Plus) Thrushaft use BD mounting
FO-11E308LL-VCS (UltraShift Plus) Thrushaft use BD mounting
FO-12E308LL-VCS (UltraShift Plus) Thrushaft use BD mounting
FO-14E308LL-VCS (UltraShift Plus) Thrushaft use BD mounting
FO-16E308LL-VCS (UltraShift Plus) Thrushaft use BD mounting
FO-17E308LL-VCS (UltraShift Plus) Thrushaft use BD Mounting

BOTTOM SIDE ONLY

TRANSMISSION GEAR DATA:
BOT 08-BOLT Opening Gear FORWARD of Centerline
47 Teeth - SPUR

PITCH LINE TO APERTURE FACE:
0.8050" (20.4500MM)

RIGHT SIDE ONLY

TRANSMISSION GEAR DATA:
R.S. 06-BOLT Opening Gear FORWARD of Centerline
45 Teeth - SPUR

PITCH LINE TO APERTURE FACE:
1.0850" (27.5600MM)

Caution: Application Approval Required for PTO Output Shaft Speeds Above 2500 RPM

BOTTOM Side PTO Model	Inter. Torq.	Dir. Rot.	Engine % Fwd.	Engine % Rev.	Filler Block	Adapter Assy.	Stud Kit	RIGHT Side PTO Model	Inter. Torq.	Dir. Rot.	Engine % Fwd.	Engine % Rev.	Filler Block	Adapter Assy.	Stud Kit
ONE SPEED - FORWARD & REVERSE															
348XFAHX-*5 (24)	200	Opp	100	105			Furnished	340XFAHX-*5 (24)	200	Opp	96	101	7-A-140(28)		Furnished
352ZSAHX-*3 (1)	140	Opp	223	288		328564X	Furnished	352XSAHX-*3 (1)	140	Opp	213	276			Furnished
863XBAHX-*5	423	Opp	78	97			Furnished								
GEARED ADAPTERS															
628XAHX-3AH	250	Eng	0		8-A-032		Furnished	626XAHX-3AH	250	Eng	0				Furnished
								630XAHX-3AH	250	Eng	0				Furnished
								645XAHX-3AH	250	Eng	0				Furnished

Continued Next Page

CAUTION: INPUT SIGNAL REQUIRED - The Eaton UltraShift Plus transmission must have an input signal from the Power Take-Off when it is active. In this active state, the clutch engagement is controlled when the operator raises the engine speed to engage the clutch and drive the transmission main box countershaft. per EATON spec. "TRIG-2600". INCORRECT or NO PTO interface signal to the transmission will result in uncontrolled engagement of the clutch during PTO operation.

CAUTION: 660/680 SERIES: Applications above 1500 RPM output shaft speed, contact Chelsea Technical Service for approval. DO NOT use Standard Geared Adapters w/660 Series, contact Chelsea Technical Service.

NOTE: The Eaton Inertia Brake comes standard and is internal to the transmission.

NOTE: The 442XBAH must use one of the geared adapters listed on the application page. The direction of rotation shown is the final output shaft rotation w/ geared adapter.

NOTE: Eaton Fuller will provide a dump pump bracket (Eaton Part#4306528) as standard on -VCS,-VMS and -VXP transmission models for the bottom 8-Bolt opening and optional on -LAS,-MHP and -MXP model transmissions.

NOTE: All PTO Torque Values Reflect the Higher Torque 750 Ft-lb [1017 Nm] Main Transmission Input Bearing for Intermittent Duty Cycles as Standard from Eaton for the Transmissions Listed for this Page. For Continuous Duty Cycles do not exceed 500 Ft-lb [678 Nm.] . Refer to the Chelsea PTO Torque Limit Chart in the front of this section for complete torque limit information.

(1) Input Gear Part No. 5-P-1004
(24) Input Gear Part No. 5-P-581
(28) Filler block furnished with P.T.O.

Parker Hannifin Corporation
Chelsea Products Division
Olive Branch, MS 38654 USA

FO-10E308LL-VCS (UltraShift Plus) Thrushaft use BD mounting
FO-11E308LL-VCS (UltraShift Plus) Thrushaft use BD mounting
FO-12E308LL-VCS (UltraShift Plus) Thrushaft use BD mounting
FO-14E308LL-VCS (UltraShift Plus) Thrushaft use BD mounting
FO-16E308LL-VCS (UltraShift Plus) Thrushaft use BD mounting
FO-17E308LL-VCS (UltraShift Plus) Thrushaft use BD Mounting

REAR SIDE ONLY

TRANSMISSION GEAR DATA:
REAR 00-BOLT Opening

PITCH LINE TO APERTURE FACE:

Caution: Application Approval Required for PTO Output Shaft Speeds Above 2500 RPM

REAR Side PTO Model	Inter. Torq.	Dir. Rot.	Engine %		Filler Block	Adapter Assy.	Stud Kit		Inter. Torq.	Dir. Rot.	Engine %		Filler Block	Adapter Assy.	Stud Kit
			Fwd.	Rev.							Fwd.	Rev.			

REAR MOUNT - MECHANICAL SHIFT (10 SPEED TRANSMISSIONS)

541-LBD-*-*	400	Eng	91		Furnished
541-MBD-*-*	350	Eng	117		Furnished
541-NBD-*-*	300	Eng	133		Furnished

CAUTION: INPUT SIGNAL REQUIRED - The Eaton UltraShift Plus transmission must have an input signal from the Power Take-Off when it is active. In this active state, the clutch engagement is controlled when the operator raises the engine speed to engage the clutch and drive the transmission main box countershaft. per EATON spec. "TRIG-2600". INCORRECT or NO PTO interface signal to the transmission will result in uncontrolled engagement of the clutch during PTO operation.

CAUTION: 660/680 SERIES: Applications above 1500 RPM output shaft speed, contact Chelsea Technical Service for approval. DO NOT use Standard Geared Adapters w/660 Series, contact Chelsea Technical Service.

NOTE: The Eaton Inertia Brake comes standard and is internal to the transmission.

NOTE: The 442XBAH must use one of the geared adapters listed on the application page. The direction of rotation shown is the final output shaft rotation w/ geared adapter.

NOTE: Eaton Fuller will provide a dump pump bracket (Eaton Part#4306528) as standard on -VCS,-VMS and -VXP transmission models for the bottom 8-Bolt opening and optional on -LAS,-MHP and -MXP model transmissions.

NOTE: All PTO Torque Values Reflect the Higher Torque 750 Ft-lb [1017 Nm] Main Transmission Input Bearing for Intermittent Duty Cycles as Standard from Eaton for the Transmissions Listed for this Page. For Continuous Duty Cycles do not exceed 500 Ft-lb [678 Nm.] . Refer to the Chelsea PTO Torque Limit Chart in the front of this section for complete torque limit information.

Parker Hannifin Corporation
Chelsea Products Division
Olive Branch, MS 38654 USA

F-14E16B-LSE (UltraShift Plus)
F-15E16B-LSE (UltraShift Plus)
F-17E16B-LSE (UltraShift Plus)
FM-15E16B-LSE (UltraShift Plus)
FO-10E309ALL-VMS (UltraShift Plus) Thrushaft use BD mounting
FO-10E310C-VAS (UltraShift Plus)Thrushaft use AT mounting
FO-11E309ALL-VMS (UltraShift Plus) Thrushaft use BD mounting
FO-12E309ALL-VMS (UltraShift Plus) Thrushaft use BD mounting
FO-12E310C-VAS (UltraShift Plus)Thrushaft use AT mounting
FO-14E309ALL-VMS (UltraShift Plus)Thrushaft use BD mounting
FO-14E310C-LAS (UltraShift Plus) Thrushaft use AT mounting
FO-14E310C-VAS (UltraShift Plus)Thrushaft use AT mounting
FO-14E313A-MHP (UltraShift Plus)
FO-14E313A-VHP (UltraShift Plus)
FO-14E318B-MXP (UltraShift Plus)
FO-14E318B-VXP (UltraShift Plus)
FO-16E309ALL-VMS (UltraShift Plus)Thrushaft use BD mounting
FO-16E310C-LAS (UltraShift Plus) Thrushaft use AT mounting
FO-16E310C-VAS (UltraShift Plus) Thrushaft use AT mounting
FO-16E313A-MHP (UltraShift Plus)
FO-16E313A-VHP (UltraShift Plus)
FO-16E318B-MXP (UltraShift Plus)
FO-16E318B-VXP (UltraShift Plus)
FO-16E318B-VXP (UltraShift Plus)

BOTTOM SIDE ONLY

TRANSMISSION GEAR DATA:
BOT 08-BOLT Opening Gear FORWARD of Centerline
47 Teeth - SPUR

PITCH LINE TO APERTURE FACE:
0.8050" (20.4500MM)

RIGHT SIDE ONLY

TRANSMISSION GEAR DATA:
R.S. 06-BOLT Opening Gear FORWARD of Centerline
45 Teeth - SPUR

PITCH LINE TO APERTURE FACE:
1.0850" (27.5600MM)

Caution: Application Approval Required for PTO Output Shaft Speeds Above 2500 RPM

BOTTOM Side PTO Model	Inter. Torq.	Dir. Rot.	Engine % Fwd.	Engine % Rev.	Filler Block	Adapter Assy.	Stud Kit	RIGHT Side PTO Model	Inter. Torq.	Dir. Rot.	Engine % Fwd.	Engine % Rev.	Filler Block	Adapter Assy.	Stud Kit
ONE SPEED - TWO GEAR - MECHANICAL SHIFT															
489XAAHX-*5 (12)	250	Opp	61				Furnished	221XCAHX-*3	250	Eng	66		7-A-032(P)(29)	329138X	Furnished
489XCAHX-*5 (13)	250	Opp	78				Furnished	221XEAHX-*3	250	Eng	76			329138X	Furnished
489XFAHX-*5 (2)	250	Opp	96				Furnished	221XLAHX-*3	200	Eng	102			329138X	Furnished
489XHAHX-*5 (15)	250	Opp	111				Furnished	221XPAHX-*3	200	Eng	124			329138X	Furnished
489XLAHX-*5 (1)	250	Opp	124				Furnished	442XAAHX-*3 (12)	250	Opp	58				Furnished
489XQAHX-*5 (1)	225	Opp	134				Furnished	442XBAHX-*3 (18)	250	Eng	58			REQUIRED	Furnished
489XRAHX-*5 (1)	225	Opp	155				Furnished	442XCAHX-*3 (13)	250	Opp	74				Furnished
489XSAHX-*5 (1)	200	Opp	184				Furnished	442XFAHX-*3 (2)	250	Opp	92				Furnished
680XFAHX-*3 (10)	375	Opp	96				Furnished	442XHAHX-*3 (15)	250	Opp	107				Furnished
680XHAHX-*3 (21)	375	Opp	111				Furnished	442XLAHX-*3 (1)	250	Opp	119				Furnished
680XQAHX-*3 (11)	375	Opp	134				Furnished	442XQAHX-*3 (1)	225	Opp	128				Furnished
680XRAHX-*3 (19)	310	Opp	155				Furnished	442XRAHX-*3 (1)	225	Opp	148				Furnished
680XSAHX-*3 (14)	220	Opp	184				Furnished	660XFAHX-*3 (10)	375	Opp	92				Furnished
823XBAHX-*3 (23)	500	Opp	65				Furnished	660XHAHX-*3 (15)	375	Opp	107				Furnished
823XDAHX-*3 (27)	500	Opp	98				Furnished	660XQAHX-*3 (11)	375	Opp	128				Furnished
823XGAHX-*3 (28)	500	Opp	106				Furnished	660XRAHX-*3 (19)	340	Opp	148				Furnished
823XJAHX-*3 (24)	500	Opp	99				Furnished								
823XMAHX-*3 (22)	511	Opp	116				Furnished								
823XRAHX-*3 (26)	290	Opp	160				Furnished								
823XTKTX-*3 (17)	190	Opp	194		8-A-165(T)(29)		Furnished								
880XBAHX-*3 (3)	500	Opp	65				Furnished								
880XDAHX-*3 (4)	500	Opp	77				Furnished								
880XGAHX-*3 (8)	500	Opp	84				Furnished								
880XJAHX-*3 (5)	500	Opp	99				Furnished								
880XMAHX-*3 (6)	500	Opp	116				Furnished								
880XQAHX-*3 (16)	450	Opp	136				Furnished								
880XRAHX-*3 (7)	290	Opp	160				Furnished								
ONE SPEED - TWO GEAR POWERSHIFT (AIR OR HYDRAULIC)															
282XBAJX-*3	300	Opp	65				Furnished	272XAAJX-*3	300	Opp	51				Furnished
282XCAJX-*3	300	Opp	79				Furnished	272XBAJX-*3	300	Opp	63				Furnished
282XDAJX-*3	300	Opp	95				Furnished	272XCAJX-*3	300	Opp	76				Furnished

Continued Next Page

CAUTION: INPUT SIGNAL REQUIRED - The Eaton UltraShift Plus Transmissions must have an input signal from the Power Take-Off when it is active. In this active state, the clutch engagement is controlled when the operator raises the engine speed to engage the clutch and drive the transmission main box countershaft, per EATON spec. "TRIG-2600". INCORRECT or NO PTO interface signal to the transmission will result in uncontrolled engagement of the clutch during PTO operation.

CAUTION: 660/680 SERIES: Applications above 1500 RPM output shaft speed, contact Chelsea Technical Service for approval. DO NOT use Standard Geared Adapters w/660 Series, contact Chelsea Technical Service.

NOTE: All PTO Torque Values Reflect the Higher Torque 750 Ft-lb [1017 Nm] Main Transmission Input Bearing for Intermittent Duty Cycles as Standard from Eaton for the Transmissions Listed for this Page. For Continuous Duty Cycles do not exceed 500 Ft-lb [678 Nm.] . Refer to the Chelsea PTO Torque Limit Chart in the front of this section for complete torque limit information.

NOTE: The Eaton UltraShift Plus Transmission Inertia Brake comes standard and is internal to the transmission.

NOTE: Eaton Automated 13 and 18 speeds cannot accept the Thrushaft Power Take-Offs. The bottom left countershaft opening is used for the splitter cylinder and the top right countershaft opening is used for the range.

NOTE: 6-Bolt PTO will interfere with front mount oil filter. Rear or remote mount filter must be used

NOTE: The 442XBAH must use one of the geared adapters listed on the application page. The direction of rotation shown is the final output shaft rotation w/ geared adapter.

NOTE: Eaton Fuller will provide a dump pump bracket (Eaton Part#4306528) as standard on -VCS,-VMS, and -VXP transmission models for the bottom 8-Bolt opening and optional on -LAS,-MHP, and -MXP model transmissions. Refer to the Chelsea PTO Torque Limit Chart in the front of this section for complete torque limit information.

(1) Input Gear Part No. 5-P-1004
(2) Input Gear Part No. 5-P-1077
(3) Input Gear Part No. 5-P-1100
(4) Input Gear Part No. 5-P-1101
(5) Input Gear Part No. 5-P-1102
(6) Input Gear Part No. 5-P-1103
(7) Input Gear Part No. 5-P-1104
(8) Input Gear Part No. 5-P-1135
(10) Input Gear Part No. 5-P-1242
(11) Input Gear Part No. 5-P-1246
(12) Input Gear Part No. 5-P-1280
(13) Input Gear Part No. 5-P-1287
(14) Input Gear Part No. 5-P-1322
(15) Input Gear Part No. 5-P-1364
(16) Input Gear Part No. 5-P-1385
(17) Input Gear Part No. 5-P-1395
(18) Input Gear Part No. 5-P-1418
(19) Input Gear Part No. 5-P-1441
(21) Input Gear Part No. 5-P-1494
(22) Input Gear Part No. 5-P-283
(23) Input Gear Part No. 5-P-285
(24) Input Gear Part No. 5-P-325
(26) Input Gear Part No. 5-P-721
(27) Input Gear Part No. 5-P-971
(28) Input Gear Part No. 5-P-980
(29) Filler block furnished with P.T.O.

Parker Hannifin Corporation
Chelsea Products Division
Olive Branch, MS 38654 USA

F-14E16B-LSE (UltraShift Plus)
F-15E16B-LSE (UltraShift Plus)
F-17E16B-LSE (UltraShift Plus)
FM-15E16B-LSE (UltraShift Plus)
FO-10E309ALL-VMS (UltraShift Plus) Thrushaft use BD mounting
FO-10E310C-VAS (UltraShift Plus)Thrushaft use AT mounting
FO-11E309ALL-VMS (UltraShift Plus) Thrushaft use BD mounting
FO-12E309ALL-VMS (UltraShift Plus) Thrushaft use BD mounting
FO-12E310C-VAS (UltraShift Plus)Thrushaft use AT mounting
FO-14E309ALL-VMS (UltraShift Plus)Thrushaft use BD mounting
FO-14E310C-LAS (UltraShift Plus) Thrushaft use AT mounting
FO-14E310C-VAS (UltraShift Plus)Thrushaft use AT mounting
FO-14E313A-MHP (UltraShift Plus)
FO-14E313A-VHP (UltraShift Plus)
FO-14E318B-MXP (UltraShift Plus)
FO-14E318B-VXP (UltraShift Plus)
FO-16E309ALL-VMS (UltraShift Plus)Thrushaft use BD mounting
FO-16E310C-LAS (UltraShift Plus) Thrushaft use AT mounting
FO-16E310C-VAS (UltraShift Plus) Thrushaft use AT mounting
FO-16E313A-MHP (UltraShift Plus)
FO-16E313A-VHP (UltraShift Plus)
FO-16E318B-MXP (UltraShift Plus)
FO-16E318B-VXP (UltraShift Plus)
FO-16E318B-VXP (UltraShift Plus)

BOTTOM SIDE ONLY

TRANSMISSION GEAR DATA:
BOT 08-BOLT Opening Gear FORWARD of Centerline
47 Teeth - SPUR

PITCH LINE TO APERTURE FACE:
0.8050" (20.4500MM)

RIGHT SIDE ONLY

TRANSMISSION GEAR DATA:
R.S. 06-BOLT Opening Gear FORWARD of Centerline
45 Teeth - SPUR

PITCH LINE TO APERTURE FACE:
1.0850" (27.5600MM)

Caution: Application Approval Required for PTO Output Shaft Speeds Above 2500 RPM

BOTTOM Side PTO Model	Inter. Torq.	Dir. Rot.	Engine % Fwd.	Engine % Rev.	Filler Block	Adapter Assy.	Stud Kit	RIGHT Side PTO Model	Inter. Torq.	Dir. Rot.	Engine % Fwd.	Engine % Rev.	Filler Block	Adapter Assy.	Stud Kit
ONE SPEED - TWO GEAR POWERSHIFT (AIR OR HYDRAULIC)															
282XGAJX-*3	300	Opp	112				Furnished	272XDAJX-*3	300	Opp	90				
282XKAJX-*3	314	Opp	126				Furnished	272XGAJX-*3	300	Opp	108				Furnished
282XMAJX-*3	281	Opp	140				Furnished	272XKAJX-*3	300	Opp	120				Furnished
282XPAJX-*3	252	Opp	157				Furnished	272XMAJX-*3	300	Opp	135				Furnished
282XSAJX-*3	201	Opp	176				Furnished	272XPAJX-*3	300	Opp	150				Furnished
282XTAJX-*3	210	Opp	188				Furnished	272XSAJX-*3	300	Opp	168				Furnished
ONE SPEED - TWO GEAR - POWERSHIFT (AIR)															
230XAAJX-*3	250	Opp	50			328481X	Furnished	230XAAJX-*3	250	Opp	48				Furnished
230XBAJX-*3	250	Opp	66			328481X	Furnished	230XBAJX-*3	250	Opp	63				Furnished
230XDAJX-*3	250	Opp	76			328481X	Furnished	230XDAJX-*3	250	Opp	73				Furnished
230XKAJX-*3	250	Opp	103			328481X	Furnished	230XKAJX-*3	250	Opp	98				Furnished
230XQAJX-*3	250	Opp	136			328481X	Furnished	230XQAJX-*3	250	Opp	131				Furnished
230XUAJX-*3 (9)	155	Opp	218			328481X	Furnished	230XUAJX-*3 (9)	170	Opp	210				Furnished
238XAAHX-*3 (20)	250	Opp	67				Furnished	236XAAHX-*3 (20)	250	Opp	64				Furnished
238XDAHX-*3 (1)	250	Opp	100				Furnished	236XDAHX-*3 (1)	250	Opp	96				Furnished
238XKAHX-*3 (1)	250	Opp	129				Furnished	236XKAHX-*3 (1)	250	Opp	123				Furnished
238XQAHX-*3 (1)	250	Opp	164				Furnished	236XQAHX-*3 (1)	250	Opp	190				Furnished
238XUAHX-*3 (1)	190	Opp	199				Furnished	236XUAHX-*3 (1)	205	Opp	190				Furnished
885XBAHX-*3 (3)	500	Opp	65				Furnished								
885XGAHX-*3 (8)	500	Opp	84				Furnished								
885XJAHX-*3 (5)	500	Opp	99				Furnished								
885XMAHX-*3 (6)	500	Opp	116				Furnished								
ONE SPEED - FORWARD & REVERSE															
348XFAHX-*5 (25)	200	Opp	84	88	8-A-093(T)(30) 8-A-032(P)(30)		Furnished	340XFAHX-*5 (25)	200	Opp	80	84	7-A-140(29)		Furnished
352ZSAHX-*3 (1)	140	Opp	187	241		328564X	Furnished	352XSAHX-*3 (1)	140	Opp	179	231			Furnished
863XBAHX-*5	423	Opp	65	81			Furnished								
GEARED ADAPTERS															
628XAHX-3AH	250	Eng	0		8-A-032		Furnished	626XAHX-3AH	250	Eng	0				Furnished

Continued Next Page

CAUTION: INPUT SIGNAL REQUIRED - The Eaton UltraShift Plus Transmissions must have an input signal from the Power Take-Off when it is active. In this active state, the clutch engagement is controlled when the operator raises the engine speed to engage the clutch and drive the transmission main box countershaft, per EATON spec. "TRIG-2600". INCORRECT or NO PTO interface signal to the transmission will result in uncontrolled engagement of the clutch during PTO operation.

CAUTION: 660/680 SERIES: Applications above 1500 RPM output shaft speed, contact Chelsea Technical Service for approval. DO NOT use Standard Geared Adapters w/660 Series, contact Chelsea Technical Service.

NOTE: All PTO Torque Values Reflect the Higher Torque 750 Ft-lb [1017 Nm] Main Transmission Input Bearing for Intermittent Duty Cycles as Standard from Eaton for the Transmissions Listed for this Page. For Continuous Duty Cycles do not exceed 500 Ft-lb [678 Nm.] . Refer to the Chelsea PTO Torque Limit Chart in the front of this section for complete torque limit information.

NOTE: The Eaton UltraShift Plus Transmission Inertia Brake comes standard and is internal to the transmission.

NOTE: Eaton Automated 13 and 18 speeds cannot accept the Thrushaft Power Take-Offs. The bottom left countershaft opening is used for the splitter cylinder and the top right countershaft opening is used for the range.

NOTE: 6-Bolt PTO will interfere with front mount oil filter. Rear or remote mount filter must be used

NOTE: The 442XBAH must use one of the geared adapters listed on the application page. The direction of rotation shown is the final output shaft rotation w/ geared adapter.

NOTE: Eaton Fuller will provide a dump pump bracket (Eaton Part#4306528) as standard on -VCS,-VMS, and -VXP transmission models for the bottom 8-Bolt opening and optional on -LAS,-MHP, and -MXP model transmissions. Refer to the Chelsea PTO Torque Limit Chart in the front of this section for complete torque limit information.

(1) Input Gear Part No. 5-P-1004
(3) Input Gear Part No. 5-P-1100
(5) Input Gear Part No. 5-P-1102
(6) Input Gear Part No. 5-P-1103
(8) Input Gear Part No. 5-P-1135
(9) Input Gear Part No. 5-P-1144 required
(20) Input Gear Part No. 5-P-1486
(25) Input Gear Part No. 5-P-581
(29) Filler block furnished with P.T.O.
(30) Filler block furnished with P.T.O. but not

Parker Hannifin Corporation
Chelsea Products Division
Olive Branch, MS 38654 USA

F-14E16B-LSE (UltraShift Plus)
F-15E16B-LSE (UltraShift Plus)
F-17E16B-LSE (UltraShift Plus)
FM-15E16B-LSE (UltraShift Plus)
FO-10E309ALL-VMS (UltraShift Plus) Thrushaft use BD mounting
FO-10E310C-VAS (UltraShift Plus)Thrushaft use AT mounting
FO-11E309ALL-VMS (UltraShift Plus) Thrushaft use BD mounting
FO-12E309ALL-VMS (UltraShift Plus) Thrushaft use BD mounting
FO-12E310C-VAS (UltraShift Plus)Thrushaft use AT mounting
FO-14E309ALL-VMS (UltraShift Plus)Thrushaft use BD mounting
FO-14E310C-LAS (UltraShift Plus) Thrushaft use AT mounting
FO-14E310C-VAS (UltraShift Plus)Thrushaft use AT mounting
FO-14E313A-MHP (UltraShift Plus)
FO-14E313A-VHP (UltraShift Plus)
FO-14E318B-MXP (UltraShift Plus)
FO-14E318B-VXP (UltraShift Plus)
FO-16E309ALL-VMS (UltraShift Plus)Thrushaft use BD mounting
FO-16E310C-LAS (UltraShift Plus) Thrushaft use AT mounting
FO-16E310C-VAS (UltraShift Plus) Thrushaft use AT mounting
FO-16E313A-MHP (UltraShift Plus)
FO-16E313A-VHP (UltraShift Plus)
FO-16E318B-MXP (UltraShift Plus)
FO-16E318B-VXP (UltraShift Plus)
FO-16E318B-VXP (UltraShift Plus)

BOTTOM SIDE ONLY

TRANSMISSION GEAR DATA:
BOT 08-BOLT Opening Gear FORWARD of Centerline
47 Teeth - SPUR

PITCH LINE TO APERTURE FACE:
0.8050" (20.4500MM)

RIGHT SIDE ONLY

TRANSMISSION GEAR DATA:
R.S. 06-BOLT Opening Gear FORWARD of Centerline
45 Teeth - SPUR

PITCH LINE TO APERTURE FACE:
1.0850" (27.5600MM)

Caution: Application Approval Required for PTO Output Shaft Speeds Above 2500 RPM

BOTTOM Side PTO Model	Inter. Torq.	Dir. Rot.	Engine %		Filler Block	Adapter Assy.	Stud Kit	RIGHT Side PTO Model	Inter. Torq.	Dir. Rot.	Engine %		Filler Block	Adapter Assy.	Stud Kit
			Fwd.	Rev.							Fwd.	Rev.			

GEARED ADAPTERS

630XAHX-3AH	250	Eng	0		Furnished
645XAHX-3AH	250	Eng	0		Furnished

Continued Next Page

CAUTION: INPUT SIGNAL REQUIRED - The Eaton UltraShift Plus Transmissions must have an input signal from the Power Take-Off when it is active. In this active state, the clutch engagement is controlled when the operator raises the engine speed to engage the clutch and drive the transmission main box countershaft, per EATON spec. "TRIG-2600". INCORRECT or NO PTO interface signal to the transmission will result in uncontrolled engagement of the clutch during PTO operation.

CAUTION: 660/680 SERIES: Applications above 1500 RPM output shaft speed, contact Chelsea Technical Service for approval. DO NOT use Standard Geared Adapters w/660 Series, contact Chelsea Technical Service.

NOTE: All PTO Torque Values Reflect the Higher Torque 750 Ft-lb [1017 Nm] Main Transmission Input Bearing for Intermittent Duty Cycles as Standard from Eaton for the Transmissions Listed for this Page. For Continuous Duty Cycles do not exceed 500 Ft-lb [678 Nm.] . Refer to the Chelsea PTO Torque Limit Chart in the front of this section for complete torque limit information.

NOTE: The Eaton UltraShift Plus Transmission Inertia Brake comes standard and is internal to the transmission.

NOTE: Eaton Automated 13 and 18 speeds cannot accept the Thrushaft Power Take-Offs. The bottom left countershaft opening is used for the splitter cylinder and the top right countershaft opening is used for the range.

NOTE: 6-Bolt PTO will interfere with front mount oil filter. Rear or remote mount filter must be used

NOTE: The 442XBAH must use one of the geared adapters listed on the application page. The direction of rotation shown is the final output shaft rotation w/ geared adapter.

NOTE: Eaton Fuller will provide a dump pump bracket (Eaton Part#4306528) as standard on -VCS,-VMS, and -VXP transmission models for the bottom 8-Bolt opening and optional on -LAS,-MHP, and -MXP model transmissions. Refer to the Chelsea PTO Torque Limit Chart in the front of this section for complete torque limit information.

Parker Hannifin Corporation
Chelsea Products Division
Olive Branch, MS 38654 USA

F-14E16B-LSE (UltraShift Plus)
F-15E16B-LSE (UltraShift Plus)
F-17E16B-LSE (UltraShift Plus)
FM-15E16B-LSE (UltraShift Plus)
FO-10E309ALL-VMS (UltraShift Plus) Thrushaft use BD mounting
FO-10E310C-VAS (UltraShift Plus)Thrushaft use AT mounting
FO-11E309ALL-VMS (UltraShift Plus) Thrushaft use BD mounting
FO-12E309ALL-VMS (UltraShift Plus) Thrushaft use BD mounting
FO-12E310C-VAS (UltraShift Plus)Thrushaft use AT mounting
FO-14E309ALL-VMS (UltraShift Plus)Thrushaft use BD mounting
FO-14E310C-LAS (UltraShift Plus) Thrushaft use AT mounting
FO-14E310C-VAS (UltraShift Plus)Thrushaft use AT mounting
FO-14E313A-MHP (UltraShift Plus)
FO-14E313A-VHP (UltraShift Plus)
FO-14E318B-MXP (UltraShift Plus)
FO-14E318B-VXP (UltraShift Plus)
FO-16E309ALL-VMS (UltraShift Plus)Thrushaft use BD mounting
FO-16E310C-LAS (UltraShift Plus) Thrushaft use AT mounting
FO-16E310C-VAS (UltraShift Plus) Thrushaft use AT mounting
FO-16E313A-MHP (UltraShift Plus)
FO-16E313A-VHP (UltraShift Plus)
FO-16E318B-MXP (UltraShift Plus)
FO-16E318B-VXP (UltraShift Plus)
FO-16E318B-VXP (UltraShift Plus)

REAR SIDE ONLY

TRANSMISSION GEAR DATA:
REAR 00-BOLT Opening

PITCH LINE TO APERTURE FACE:

Caution: Application Approval Required for PTO Output Shaft Speeds Above 2500 RPM

REAR Side PTO Model	Inter. Torq.	Dir. Rot.	Engine % Fwd.	Engine % Rev.	Filler Block	Adapter Assy.	Stud Kit		Inter. Torq.	Dir. Rot.	Engine % Fwd.	Engine % Rev.	Filler Block	Adapter Assy.	Stud Kit
REAR MOUNT - MECHANICAL SHIFT (10 SPEED TRANSMISSIONS)															
541-LAT-*-*	400	Eng	76				Furnished								
541-MAT-*-*	350	Eng	98				Furnished								
541-NAT-*-*	300	Eng	112				Furnished								
REAR MOUNT - MECHANICAL SHIFT (9 SPEED TRANSMISSIONS)															
541-LBD-*-*	400	Eng	76				Furnished								
541-MBD-*-*	350	Eng	98				Furnished								
541-NBD-*-*	300	Eng	112				Furnished								

CAUTION: INPUT SIGNAL REQUIRED - The Eaton UltraShift Plus Transmissions must have an input signal from the Power Take-Off when it is active. In this active state, the clutch engagement is controlled when the operator raises the engine speed to engage the clutch and drive the transmission main box countershaft, per EATON spec. "TRIG-2600". INCORRECT or NO PTO interface signal to the transmission will result in uncontrolled engagement of the clutch during PTO operation.

CAUTION: 660/680 SERIES: Applications above 1500 RPM output shaft speed, contact Chelsea Technical Service for approval. DO NOT use Standard Geared Adapters w/660 Series, contact Chelsea Technical Service.

NOTE: All PTO Torque Values Reflect the Higher Torque 750 Ft-lb [1017 Nm] Main Transmission Input Bearing for Intermittent Duty Cycles as Standard from Eaton for the Transmissions Listed for this Page. For Continuous Duty Cycles do not exceed 500 Ft-lb [678 Nm.] . Refer to the Chelsea PTO Torque Limit Chart in the front of this section for complete torque limit information.

NOTE: The Eaton UltraShift Plus Transmission Inertia Brake comes standard and is internal to the transmission.

NOTE: Eaton Automated 13 and 18 speeds cannot accept the Thrushaft Power Take-Offs. The bottom left countershaft opening is used for the splitter cylinder and the top right countershaft opening is used for the range.

NOTE: 6-Bolt PTO will interfere with front mount oil filter. Rear or remote mount filter must be used

NOTE: The 442XBAH must use one of the geared adapters listed on the application page. The direction of rotation shown is the final output shaft rotation w/ geared adapter.

NOTE: Eaton Fuller will provide a dump pump bracket (Eaton Part#4306528) as standard on -VCS,-VMS, and -VXP transmission models for the bottom 8-Bolt opening and optional on -LAS,-MHP, and -MXP model transmissions. Refer to the Chelsea PTO Torque Limit Chart in the front of this section for complete torque limit information.

Parker Hannifin Corporation
Chelsea Products Division
Olive Branch, MS 38654 USA

FM-14E310B-LAS (UltraShift Plus) Thrushaft use AT mounting
FM-15E310B-LAS (UltraShift Plus) Thrushaft use AT mounting

BOTTOM SIDE ONLY

TRANSMISSION GEAR DATA:
BOT 08-BOLT Opening Gear FORWARD of Centerline
47 Teeth - SPUR

PITCH LINE TO APERTURE FACE:
0.8050" (20.4500MM)

RIGHT SIDE ONLY

TRANSMISSION GEAR DATA:
R.S. 06-BOLT Opening Gear FORWARD of Centerline
45 Teeth - SPUR

PITCH LINE TO APERTURE FACE:
1.0850" (27.5600MM)

Caution: Application Approval Required for PTO Output Shaft Speeds Above 2500 RPM

ONE SPEED - TWO GEAR - MECHANICAL SHIFT

BOTTOM Side PTO Model	Inter. Torq.	Dir. Rot.	Engine % Fwd.	Engine % Rev.	Filler Block	Adapter Assy.	Stud Kit	RIGHT Side PTO Model	Inter. Torq.	Dir. Rot.	Engine % Fwd.	Engine % Rev.	Filler Block	Adapter Assy.	Stud Kit
221ZCAHX-*3	250	Opp	61		7-A-032(P)(29)	328564X	Furnished	221XCAHX-*3	250	Opp	58		7-A-032(29)		Furnished
221ZEAHX-*3	250	Opp	70			328564X	Furnished	221XEAHX-*3	250	Opp	67				Furnished
221ZLAHX-*3	200	Opp	95			328564X	Furnished	221XLAHX-*3	200	Opp	91				Furnished
221ZPAHX-*3	200	Opp	114			328564X	Furnished	221XPAHX-*3	200	Opp	110				Furnished
489XAAHX-*5 (12)	250	Opp	54				Furnished	442XAAHX-*3 (12)	250	Opp	51				Furnished
489XCAHX-*5 (13)	250	Opp	69				Furnished	442XBAHX-*3 (18)	250	Eng	51			REQUIRED	Furnished
489XFAHX-*5 (2)	250	Opp	85				Furnished	442XCAHX-*3 (13)	250	Opp	66				Furnished
489XHAHX-*5 (15)	250	Opp	99				Furnished	442XFAHX-*3 (2)	250	Opp	81				Furnished
489XLAHX-*5 (1)	250	Opp	110				Furnished	442XHAHX-*3 (15)	250	Opp	94				Furnished
489XQAHX-*5 (1)	225	Opp	118				Furnished	442XLAHX-*3 (1)	250	Opp	105				Furnished
489XRAHX-*5 (1)	225	Opp	137				Furnished	442XQAHX-*3 (1)	225	Opp	113				Furnished
489XSAHX-*5 (1)	200	Opp	163				Furnished	442XRAHX-*3 (1)	225	Opp	131				Furnished
489XUAHX-*5 (1)	195	Opp	194				Furnished	442XSAHX-*3 (1)	200	Opp	156				Furnished
489XWAHX-*5 (1)	175	Opp	229				Furnished	442XUAHX-*3 (1)	195	Opp	186				Furnished
489XXAHX-*5 (1)	140	Opp	271				Furnished	442XWAHX-*3 (1)	175	Opp	219				Furnished
680XFAHX-*3 (10)	375	Opp	85				Furnished	442XXAHX-*3 (1)	140	Opp	259				Furnished
680XHAHX-*3 (21)	375	Opp	99				Furnished	660XFAHX-*3 (10)	375	Opp	81				Furnished
680XQAHX-*3 (11)	375	Opp	118				Furnished	660XHAHX-*3 (15)	375	Opp	94				Furnished
680XRAHX-*3 (19)	350	Opp	118				Furnished	660XQAHX-*3 (11)	375	Opp	113				Furnished
680XSAHX-*3 (14)	322	Opp	163				Furnished	660XRAHX-*3 (19)	350	Opp	131				Furnished
823XBAHX-*3 (27)	750	Opp	69				Furnished	660XSAHX-*3 (14)	336	Opp	156				Furnished
823XDAHX-*3 (23)	750	Opp	58				Furnished								
823XGAHX-*3 (28)	705	Opp	74				Furnished								
823XJAHX-*3 (24)	599	Opp	88				Furnished								
823XMAHX-*3 (22)	511	Opp	103				Furnished								
823XRAHX-*3 (26)	370	Opp	142				Furnished								
823XTKTX-*3 (17)	305	Opp	172		8-A-165(29)		Furnished								
880XBAHX-*3 (3)	500	Opp	58				Furnished								
880XDAHX-*3 (4)	500	Opp	69				Furnished								
880XGAHX-*3 (9)	500	Opp	74				Furnished								
880XJAHX-*3 (5)	500	Opp	88				Furnished								
880XMAHX-*3 (6)	500	Opp	103				Furnished								

Continued Next Page

CAUTION: INPUT SIGNAL REQUIRED - The Eaton UltraShift transmission must have an input signal from the Power Take-Off when it is active. In this active state, the clutch engagement is controlled when the operator raises the engine speed to engage the clutch and drive the transmission main box countershaft. Minimum engine/transmission speed required for PTO operation is 1000 RPM, per EATON spec. "TRIG-2600". INCORRECT or NO PTO interface signal to the transmission will result in uncontrolled engagement of the clutch during PTO operation.

CAUTION: 660/680 Series: Applications above 1500 RPM output shaft speed, contact Chelsea Technical Service for approval. DO NOT use Standard Geared Adapters w/660 Series, contact Chelsea Technical Service.

NOTE: All PTO Torque Values Reflect the Higher Torque 750 Ft-lb [1017 Nm] Main Transmission Input Bearing for Intermittent Duty Cycles as Standard from Eaton for the Transmissions Listed for this Page. For Continuous Duty Cycles do not exceed 500 Ft-lb [678 Nm.] refer to the Chelsea PTO Torque Limit Chart in the front of this section for complete torque limit information.

NOTE: Refer to Eaton Installation Guide "TRIG-2600" for proper wiring diagram showing the interface connections between the PTO indicator switch and the terminal connection on the transmission.

NOTE: 630-02 - The Eaton Inertia Brake comes standard mounted on the bottom 8 bolt opening. If the 8 bolt opening is required for a PTO, the Inertia Brake can be relocated to the right side 6 bolt opening. If there is any interference (frame rails, etc.) on the right side when mounting the Inertia Brake, a 630-02 adapter can be used to move the I-Brake away from the interference.

NOTE: The 442XBAH must use one of the geared adapters listed on the application page. The direction of rotation shown is the final output shaft rotation w/ geared adapter.

NOTE: 6-Bolt PTO will interfere with front mount oil filter. Rear or remote mount filter must be used

(1) Input Gear Part No. 5-P-1004
(2) Input Gear Part No. 5-P-1077
(3) Input Gear Part No. 5-P-1100
(4) Input Gear Part No. 5-P-1101
(5) Input Gear Part No. 5-P-1102
(6) Input Gear Part No. 5-P-1103
(9) Input Gear Part No. 5-P-1135
(10) Input Gear Part No. 5-P-1242
(11) Input Gear Part No. 5-P-1246
(12) Input Gear Part No. 5-P-1280
(13) Input Gear Part No. 5-P-1287
(14) Input Gear Part No. 5-P-1322
(15) Input Gear Part No. 5-P-1364
(17) Input Gear Part No. 5-P-1395
(18) Input Gear Part No. 5-P-1418
(19) Input Gear Part No. 5-P-1441
(21) Input Gear Part No. 5-P-1494
(22) Input Gear Part No. 5-P-283
(23) Input Gear Part No. 5-P-285
(24) Input Gear Part No. 5-P-325
(26) Input Gear Part No. 5-P-721
(27) Input Gear Part No. 5-P-971
(28) Input Gear Part No. 5-P-980
(29) Filler block furnished with P.T.O.

Parker Hannifin Corporation
Chelsea Products Division
Olive Branch, MS 38654 USA

FM-14E310B-LAS (UltraShift Plus) Thrushaft use AT mounting
FM-15E310B-LAS (UltraShift Plus) Thrushaft use AT mounting

BOTTOM SIDE ONLY

TRANSMISSION GEAR DATA:
BOT 08-BOLT Opening Gear FORWARD of Centerline
47 Teeth - SPUR

PITCH LINE TO APERTURE FACE:
0.8050" (20.4500MM)

RIGHT SIDE ONLY

TRANSMISSION GEAR DATA:
R.S. 06-BOLT Opening Gear FORWARD of Centerline
45 Teeth - SPUR

PITCH LINE TO APERTURE FACE:
1.0850" (27.5600MM)

Caution: Application Approval Required for PTO Output Shaft Speeds Above 2500 RPM

BOTTOM Side PTO Model	Inter. Torq.	Dir. Rot.	Engine % Fwd.	Engine % Rev.	Filler Block	Adapter Assy.	Stud Kit	RIGHT Side PTO Model	Inter. Torq.	Dir. Rot.	Engine % Fwd.	Engine % Rev.	Filler Block	Adapter Assy.	Stud Kit
ONE SPEED - TWO GEAR - MECHANICAL SHIFT															
880XQAHX-*3 (16)	435	Opp	120				Furnished								
880XRAHX-*3 (7)	370	Opp	142				Furnished								
880XTAHX-*3 (8)	287	Opp	183				Furnished								
ONE SPEED - TWO GEAR POWERSHIFT (AIR OR HYDRAULIC)															
282XBAJX-*3	300	Opp	58				Furnished	272XAAJX-*3	300	Opp	45				Furnished
282XCAJX-*3	300	Opp	70				Furnished	272XBAJX-*3	300	Opp	55				Furnished
282XDAJX-*3	300	Opp	84				Furnished	272XCAJX-*3	300	Opp	67				Furnished
282XGAJX-*3	300	Opp	100				Furnished	272XDAJX-*3	300	Opp	80				Furnished
282XKAJX-*3	300	Opp	111				Furnished	272XGAJX-*3	300	Opp	95				Furnished
282XMAJX-*3	300	Opp	124				Furnished	272XKAJX-*3	300	Opp	107				Furnished
282XPAJX-*3	300	Opp	139				Furnished	272XMAJX-*3	300	Opp	119				Furnished
282XSAJX-*3	300	Opp	156				Furnished	272XPAJX-*3	300	Opp	133				Furnished
282XTAJX-*3	300	Opp	174				Furnished	272XSAJX-*3	300	Opp	149				Furnished
ONE SPEED - TWO GEAR - POWERSHIFT (AIR)															
230XAAJX-*3	250	Opp	45			328481X	Furnished	230XAAJX-*3	250	Opp	43				Furnished
230XBAJX-*3	250	Opp	58			328481X	Furnished	230XBAJX-*3	250	Opp	56				Furnished
230XDAJX-*3	250	Opp	67			328481X	Furnished	230XDAJX-*3	250	Opp	64				Furnished
230XKAJX-*3	250	Opp	91			328481X	Furnished	230XKAJX-*3	250	Opp	87				Furnished
230XQAJX-*3	203	Opp	121			328481X	Furnished	230XQAJX-*3	218	Opp	116				Furnished
230XUAJX-*3	200	Opp	194			328481X	Furnished	230XUAJX-*3	132	Opp	185				Furnished
238XAAHX-*3 (20)	250	Opp	59				Furnished	236XAAHX-*3 (20)	250	Opp	57				Furnished
238XDAHX-*3 (1)	250	Opp	89				Furnished	236XDAHX-*3 (1)	250	Opp	85				Furnished
238XKAHX-*3 (1)	215	Opp	114				Furnished	236XKAHX-*3 (1)	224	Opp	109				Furnished
238XQAHX-*3 (1)	160	Opp	154				Furnished	236XQAHX-*3 (1)	166	Opp	147				Furnished
238XUAHX-*3 (1)	139	Opp	176				Furnished	236XUAHX-*3 (1)	145	Opp	168				Furnished
885XBAHX-*3 (3)	500	Opp	58				Furnished								
885XGAHX-*3 (9)	500	Opp	74				Furnished								
885XJAHX-*3 (5)	500	Opp	88				Furnished								
885XMAHX-*3 (6)	500	Opp	103				Furnished								

Continued Next Page

CAUTION: INPUT SIGNAL REQUIRED - The Eaton UltraShift transmission must have an input signal from the Power Take-Off when it is active. In this active state, the clutch engagement is controlled when the operator raises the engine speed to engage the clutch and drive the transmission main box countershaft. Minimum engine/transmission speed required for PTO operation is 1000 RPM, per EATON spec. "TRIG-2600". INCORRECT or NO PTO interface signal to the transmission will result in uncontrolled engagement of the clutch during PTO operation.

CAUTION: 660/680 Series: Applications above 1500 RPM output shaft speed, contact Chelsea Technical Service for approval. DO NOT use Standard Geared Adapters w/660 Series, contact Chelsea Technical Service.

NOTE: All PTO Torque Values Reflect the Higher Torque 750 Ft-lb [1017 Nm] Main Transmission Input Bearing for Intermittent Duty Cycles as Standard from Eaton for the Transmissions Listed for this Page. For Continuous Duty Cycles do not exceed 500 Ft-lb [678 Nm.] refer to the Chelsea PTO Torque Limit Chart in the front of this section for complete torque limit information.

NOTE: Refer to Eaton Installation Guide "TRIG-2600" for proper wiring diagram showing the interface connections between the PTO indicator switch and the terminal connection on the transmission.

NOTE: 630-02 - The Eaton Inertia Brake comes standard mounted on the bottom 8 bolt opening. If the 8 bolt opening is required for a PTO, the Inertia Brake can be relocated to the right side 6 bolt opening. If there is any interference (frame rails, etc.) on the right side when mounting the Inertia Brake, a 630-02 adapter can be used to move the I-Brake away from the interference.

NOTE: The 442XBAH must use one of the geared adapters listed on the application page. The direction of rotation shown is the final output shaft rotation w/ geared adapter.

NOTE: 6-Bolt PTO will interfere with front mount oil filter. Rear or remote mount filter must be used

(1) Input Gear Part No. 5-P-1004
(3) Input Gear Part No. 5-P-1100
(5) Input Gear Part No. 5-P-1102
(6) Input Gear Part No. 5-P-1103
(7) Input Gear Part No. 5-P-1104
(8) Input Gear Part No. 5-P-1105
(9) Input Gear Part No. 5-P-1135
(16) Input Gear Part No. 5-P-1385
(20) Input Gear Part No. 5-P-1486

Parker Hannifin Corporation
Chelsea Products Division
Olive Branch, MS 38654 USA

FM-14E310B-LAS (UltraShift Plus) Thrushaft use AT mounting
FM-15E310B-LAS (UltraShift Plus) Thrushaft use AT mounting

BOTTOM SIDE ONLY

TRANSMISSION GEAR DATA:
BOT 08-BOLT Opening Gear FORWARD of Centerline
47 Teeth - SPUR

PITCH LINE TO APERTURE FACE:
0.8050" (20.4500MM)

RIGHT SIDE ONLY

TRANSMISSION GEAR DATA:
R.S. 06-BOLT Opening Gear FORWARD of Centerline
45 Teeth - SPUR

PITCH LINE TO APERTURE FACE:
1.0850" (27.5600MM)

Caution: Application Approval Required for PTO Output Shaft Speeds Above 2500 RPM

BOTTOM Side PTO Model	Inter. Torq.	Dir. Rot.	Engine % Fwd.	Engine % Rev.	Filler Block	Adapter Assy.	Stud Kit	RIGHT Side PTO Model	Inter. Torq.	Dir. Rot.	Engine % Fwd.	Engine % Rev.	Filler Block	Adapter Assy.	Stud Kit
ONE SPEED - FORWARD & REVERSE															
348XFAHX-*5 (25)	200	Opp	74	78			Furnished	340XFAHX-*5 (25)	200	Opp	71	75	7-A-140(29)		Furnished
352ZSAHX-*3 (1)	140	Opp	165	214		328564X	Furnished	352XSAHX-*3 (1)	140	Opp	158	205			Furnished
863XBAHX-*5	423	Opp	58	72			Furnished								
GEARED ADAPTERS															
628XAHX-4AH	250	Eng	0		8-A-032		Furnished	626XAHX-3AH	250	Eng	0				Furnished
								630-02	250	Eng	0				Furnished
								630XAHX-3AH	250	Eng	0				Furnished
								645XAHX-3AH	250	Eng	0				Furnished

Continued Next Page

CAUTION: INPUT SIGNAL REQUIRED - The Eaton UltraShift transmission must have an input signal from the Power Take-Off when it is active. In this active state, the clutch engagement is controlled when the operator raises the engine speed to engage the clutch and drive the transmission main box countershaft. Minimum engine/transmission speed required for PTO operation is 1000 RPM, per EATON spec. "TRIG-2600". INCORRECT or NO PTO interface signal to the transmission will result in uncontrolled engagement of the clutch during PTO operation.

CAUTION: 660/680 Series: Applications above 1500 RPM output shaft speed, contact Chelsea Technical Service for approval. DO NOT use Standard Geared Adapters w/660 Series, contact Chelsea Technical Service.

NOTE: All PTO Torque Values Reflect the Higher Torque 750 Ft-lb [1017 Nm] Main Transmission Input Bearing for Intermittent Duty Cycles as Standard from Eaton for the Transmissions Listed for this Page. For Continuous Duty Cycles do not exceed 500 Ft-lb [678 Nm.] refer to the Chelsea PTO Torque Limit Chart in the front of this section for complete torque limit information.

NOTE: Refer to Eaton Installation Guide "TRIG-2600" for proper wiring diagram showing the interface connections between the PTO indicator switch and the terminal connection on the transmission.

NOTE: 630-02 - The Eaton Inertia Brake comes standard mounted on the bottom 8 bolt opening. If the 8 bolt opening is required for a PTO, the Inertia Brake can be relocated to the right side 6 bolt opening. If there is any interference (frame rails, etc.) on the right side when mounting the Inertia Brake, a 630-02 adapter can be used to move the I-Brake away from the interference.

NOTE: The 442XBAH must use one of the geared adapters listed on the application page. The direction of rotation shown is the final output shaft rotation w/ geared adapter.

NOTE: 6-Bolt PTO will interfere with front mount oil filter. Rear or remote mount filter must be used

(1) Input Gear Part No. 5-P-1004
(25) Input Gear Part No. 5-P-581
(29) Filler block furnished with P.T.O.

Parker Hannifin Corporation
Chelsea Products Division
Olive Branch, MS 38654 USA

FM-14E310B-LAS (UltraShift Plus) Thrushaft use AT mounting
FM-15E310B-LAS (UltraShift Plus) Thrushaft use AT mounting

REAR SIDE ONLY

TRANSMISSION GEAR DATA:
REAR 00-BOLT Opening

PITCH LINE TO APERTURE FACE:

Caution: Application Approval Required for PTO Output Shaft Speeds Above 2500 RPM

REAR Side PTO Model	Inter. Torq.	Dir. Rot.	Engine %		Filler Block	Adapter Assy.	Stud Kit		Inter. Torq.	Dir. Rot.	Engine %		Filler Block	Adapter Assy.	Stud Kit
			Fwd.	Rev.							Fwd.	Rev.			

REAR MOUNT - MECHANICAL SHIFT (10 SPEED TRANSMISSIONS)

541-LAT-*-*	400	Eng	67			Furnished									
541-MAT-*-*	350	Eng	87			Furnished									
541-NAT-*-*	300	Eng	99			Furnished									

CAUTION: INPUT SIGNAL REQUIRED - The Eaton UltraShift transmission must have an input signal from the Power Take-Off when it is active. In this active state, the clutch engagement is controlled when the operator raises the engine speed to engage the clutch and drive the transmission main box countershaft. Minimum engine/transmission speed required for PTO operation is 1000 RPM, per EATON spec. "TRIG-2600". INCORRECT or NO PTO interface signal to the transmission will result in uncontrolled engagement of the clutch during PTO operation.

CAUTION: 660/680 Series: Applications above 1500 RPM output shaft speed, contact Chelsea Technical Service for approval. DO NOT use Standard Geared Adapters w/660 Series, contact Chelsea Technical Service.

NOTE: All PTO Torque Values Reflect the Higher Torque 750 Ft-lb [1017 Nm] Main Transmission Input Bearing for Intermittent Duty Cycles as Standard from Eaton for the Transmissions Listed for this Page. For Continuous Duty Cycles do not exceed 500 Ft-lb [678 Nm.] refer to the Chelsea PTO Torque Limit Chart in the front of this section for complete torque limit information.

NOTE: Refer to Eaton Installation Guide "TRIG-2600" for proper wiring diagram showing the interface connections between the PTO indicator switch and the terminal connection on the transmission.

NOTE: 630-02 - The Eaton Inertia Brake comes standard mounted on the bottom 8 bolt opening. If the 8 bolt opening is required for a PTO, the Inertia Brake can be relocated to the right side 6 bolt opening. If there is any interference (frame rails, etc.) on the right side when mounting the Inertia Brake, a 630-02 adapter can be used to move the I-Brake away from the interference.

NOTE: The 442XBAH must use one of the geared adapters listed on the application page. The direction of rotation shown is the final output shaft rotation w/ geared adapter.

NOTE: 6-Bolt PTO will interfere with front mount oil filter. Rear or remote mount filter must be used

Parker Hannifin Corporation
Chelsea Products Division
Olive Branch, MS 38654 USA

FAO-11810C (Advantage Series)
FAO-12810C (Advantage Series)
FAO-13810C (Advantage Series)
FAO-14810C (Advantage Series)
FAO-15810C (Advantage Series)
FAO-16810C (Advantage Series)
FAO-16810S-EN3 (Advanatge Series Automated)
FAO-16810S-EP3 (Advantage Series Automated)
FAOF-11810C (Advantage Series)
FAOF-12810C (Advantage Series)
FAOF-13810C (Advantage Series)
FAOF-14810C (Advantage Series)
FAOF-15810C (Advantage Series)
FAOF-16810C (Advantage Series)
FAOM-14810C (Advantage Series)
FAOM-14810S-EC3 (Advantage Series Automated)
FAOM-15810C (Advantage Series)
FAOM-15810S-EC3 (Advantage Series Automated)
FAOM-15810S-EN3 (Advantage Series Automated)
FAOM-15810S-EP3 (Advantage Series Automated)
FAOM-16810C (Advantage Series)
FAOMF-14810C (Advantage Series)
FAOMF-15810C (Advantage Series)
FAOMF-16810C (Advantage Series)

BOTTOM SIDE ONLY

TRANSMISSION GEAR DATA:
BOT 08-BOLT Opening Gear FORWARD of Centerline
47 Teeth - SPUR

PITCH LINE TO APERTURE FACE:
0.8050" (20.4500MM)

RIGHT SIDE ONLY

TRANSMISSION GEAR DATA:
R.S. 06-BOLT Opening Gear FORWARD of Centerline
45 Teeth - SPUR

PITCH LINE TO APERTURE FACE:
1.0850" (27.5600MM)

Caution: Application Approval Required for PTO Output Shaft Speeds Above 2500 RPM

ONE SPEED - TWO GEAR - MECHANICAL SHIFT

BOTTOM Side PTO Model	Inter. Torq.	Dir. Rot.	Engine % Fwd.	Engine % Rev.	Filler Block	Adapter Assy.	Stud Kit	RIGHT Side PTO Model	Inter. Torq.	Dir. Rot.	Engine % Fwd.	Engine % Rev.	Filler Block	Adapter Assy.	Stud Kit
489XAAHX-*5 (13)	250	Opp	61				Furnished	221XCAHX-*3	250	Eng	66		7-A-032(P)(30)	329138X	Furnished
489XCAHX-*5 (14)	250	Opp	78				Furnished	221XEAHX-*3	250	Eng	76			329138X	Furnished
489XFAHX-*5 (2)	250	Opp	96				Furnished	221XLAHX-*3	200	Eng	102			329138X	Furnished
489XHAHX-*5 (16)	250	Opp	111				Furnished	221XPAHX-*3	200	Eng	124			329138X	Furnished
489XLAHX-*5 (1)	250	Opp	124				Furnished	442XAAHX-*3 (13)	250	Opp	58				Furnished
489XQAHX-*5 (1)	225	Opp	134				Furnished	442XBAHX-*3 (19)	250	Eng	58			REQUIRED	Furnished
489XRAHX-*5 (1)	225	Opp	155				Furnished	442XCAHX-*3 (14)	250	Opp	74				Furnished
489XSAHX-*5 (1)	200	Opp	184				Furnished	442XFAHX-*3 (2)	250	Opp	92				Furnished
489XUAHX-*5 (1)	195	Opp	219				Furnished	442XHAHX-*3 (16)	250	Opp	107				Furnished
489XWAHX-*5 (1)	175	Opp	258				Furnished	442XLAHX-*3 (1)	250	Opp	119				Furnished
489XXAHX-*5 (1)	140	Opp	164				Furnished	442XQAHX-*3 (1)	225	Opp	128				Furnished
680XFAHX-*3 (11)	375	Opp	96				Furnished	442XRAHX-*3 (1)	225	Opp	148				Furnished
680XHAHX-*3 (22)	375	Opp	111				Furnished	660XFAHX-*3 (11)	375	Opp	92				Furnished
680XQAHX-*3 (12)	375	Opp	134				Furnished	660XHAHX-*3 (16)	375	Opp	107				Furnished
680XRAHX-*3 (20)	350	Opp	155				Furnished	660XQAHX-*3 (12)	375	Opp	128				Furnished
680XSAHX-*3 (15)	322	Opp	184				Furnished	660XRAHX-*3 (20)	350	Opp	148				Furnished
823XBAHX-*3 (24)	750	Opp	65				Furnished								
823XDAHX-*3 (28)	750	Opp	98				Furnished								
823XGAHX-*3 (29)	705	Opp	106				Furnished								
823XJAHX-*3 (25)	599	Opp	99				Furnished								
823XMAHX-*3 (23)	511	Opp	116				Furnished								
823XRAHX-*3 (27)	370	Opp	160				Furnished								
823XTKTX-*3 (18)	305	Opp	194		8-A-165(T)(30)		Furnished								
880XBAHX-*3 (3)	500	Opp	65				Furnished								
880XDAHX-*3 (4)	500	Opp	77				Furnished								
880XGAHX-*3 (9)	500	Opp	84				Furnished								
880XJAHX-*3 (5)	500	Opp	99				Furnished								
880XMAHX-*3 (6)	500	Opp	116				Furnished								
880XQAHX-*3 (17)	435	Opp	136				Furnished								
880XRAHX-*3 (7)	370	Opp	160				Furnished								
880XTAHX-*3 (8)	287	Opp	206				Furnished								

Continued Next Page

CAUTION: INPUT SIGNAL REQUIRED - In any case a PTO is used, regardless of PTO style, the transmission must have an input signal from the PTO when it is active. EATON requires the OEM to provide a "PTO Active" input connection to the transmission ECU. Refer to the Vehicle OEM for wire connection information and to Eaton TRIG2600 for Transmission/PTO Operations.

CAUTION: 660/680 Series: Applications above 1500 RPM output shaft speed, contact Chelsea Technical Service for approval. DO NOT use Standard Geared Adapters w/660 Series, contact Chelsea Technical Service.

NOTE: All PTO Torque Values Reflect the Higher Torque 750 Ft-lb [1017 Nm] Main Transmission Input Bearing for Intermittent Duty Cycles as Standard from Eaton for the Transmissions Listed for this Page. For Continuous Duty Cycles do not exceed 500 Ft-lb [678 Nm.]. Refer to the Chelsea PTO Torque Limit Chart in the front of this section for complete torque limit information.

NOTE: Eaton Automated 13 and 18 speeds cannot accept the Thrushaft Power Take-Offs. The bottom left countershaft opening is used for the splitter cylinder and the top right countershaft opening is used for the range.

NOTE: Optional front mount oil filter will interfere with 6-Bolt P.T.O installations. Rear or remote mount filter must be used.

NOTE: The 442XBAH must use one of the geared adapters listed on the application page. The direction of rotation shown is the final output shaft rotation w/ geared adapter.

(1) Input Gear Part No. 5-P-1004
(2) Input Gear Part No. 5-P-1077
(3) Input Gear Part No. 5-P-1100
(4) Input Gear Part No. 5-P-1101
(5) Input Gear Part No. 5-P-1102
(6) Input Gear Part No. 5-P-1103
(7) Input Gear Part No. 5-P-1104
(8) Input Gear Part No. 5-P-1105
(9) Input Gear Part No. 5-P-1135
(11) Input Gear Part No. 5-P-1242
(12) Input Gear Part No. 5-P-1246
(13) Input Gear Part No. 5-P-1280
(14) Input Gear Part No. 5-P-1287
(15) Input Gear Part No. 5-P-1322
(16) Input Gear Part No. 5-P-1364
(17) Input Gear Part No. 5-P-1385
(18) Input Gear Part No. 5-P-1395
(19) Input Gear Part No. 5-P-1418
(20) Input Gear Part No. 5-P-1441
(22) Input Gear Part No. 5-P-1494
(23) Input Gear Part No. 5-P-283
(24) Input Gear Part No. 5-P-285
(25) Input Gear Part No. 5-P-325
(27) Input Gear Part No. 5-P-721
(28) Input Gear Part No. 5-P-971
(29) Input Gear Part No. 5-P-980
(30) Filler block furnished with P.T.O.

Parker Hannifin Corporation
Chelsea Products Division
Olive Branch, MS 38654 USA

FAO-11810C (Advantage Series)
FAO-12810C (Advantage Series)
FAO-13810C (Advantage Series)
FAO-14810C (Advantage Series)
FAO-15810C (Advantage Series)
FAO-16810C (Advantage Series)
FAO-16810S-EN3 (Advanatge Series Automated)
FAO-16810S-EP3 (Advantage Series Automated)

FAOF-11810C (Advantage Series)
FAOF-12810C (Advantage Series)
FAOF-13810C (Advantage Series)
FAOF-14810C (Advantage Series)
FAOF-15810C (Advantage Series)
FAOF-16810C (Advantage Series)
FAOM-14810C (Advantage Series)
FAOM-14810S-EC3 (Advantage Series Automated)

FAOM-15810C (Advantage Series)
FAOM-15810S-EC3 (Advantage Series Automated)
FAOM-15810S-EN3 (Advantage Series Automated)
FAOM-15810S-EP3 (Advantage Series Automated)
FAOM-16810C (Advantage Series)
FAOMF-14810C (Advantage Series)
FAOMF-15810C (Advantage Series)
FAOMF-16810C (Advantage Series)

BOTTOM SIDE ONLY

TRANSMISSION GEAR DATA:
BOT 08-BOLT Opening Gear FORWARD of Centerline
47 Teeth - SPUR

PITCH LINE TO APERTURE FACE:
0.8050" (20.4500MM)

RIGHT SIDE ONLY

TRANSMISSION GEAR DATA:
R.S. 06-BOLT Opening Gear FORWARD of Centerline
45 Teeth - SPUR

PITCH LINE TO APERTURE FACE:
1.0850" (27.5600MM)

Caution: Application Approval Required for PTO Output Shaft Speeds Above 2500 RPM

BOTTOM Side PTO Model	Inter. Torq.	Dir. Rot.	Engine % Fwd.	Engine % Rev.	Filler Block	Adapter Assy.	Stud Kit	RIGHT Side PTO Model	Inter. Torq.	Dir. Rot.	Engine % Fwd.	Engine % Rev.	Filler Block	Adapter Assy.	Stud Kit
ONE SPEED - TWO GEAR POWERSHIFT (AIR OR HYDRAULIC)															
282XBAJX-*3	300	Opp	65				Furnished	272XAAJX-*3	300	Opp	51				Furnished
282XCAJX-*3	300	Opp	79				Furnished	272XBAJX-*3	300	Opp	63				Furnished
282XDAJX-*3	300	Opp	95				Furnished	272XCAJX-*3	300	Opp	76				Furnished
282XGAJX-*3	300	Opp	112				Furnished	272XDAJX-*3	300	Opp	90				Furnished
282XKAJX-*3	300	Opp	126				Furnished	272XGAJX-*3	300	Opp	108				Furnished
282XMAJX-*3	300	Opp	140				Furnished	272XKAJX-*3	300	Opp	120				Furnished
282XPAJX-*3	300	Opp	157				Furnished	272XMAJX-*3	300	Opp	135				Furnished
282XSAJX-*3	300	Opp	176				Furnished	272XPAJX-*3	300	Opp	150				Furnished
282XTAJX-*3	300	Opp	196				Furnished	272XSAJX-*3	300	Opp	168				Furnished
ONE SPEED - TWO GEAR - POWERSHIFT (AIR)															
230XAAJX-*3	250	Opp	50			328481X	Furnished	230XAAJX-*3	250	Opp	48				Furnished
230XBAJX-*3	250	Opp	66			328481X	Furnished	230XBAJX-*3	250	Opp	63				Furnished
230XDAJX-*3	250	Opp	76			328481X	Furnished	230XDAJX-*3	250	Opp	73				Furnished
230XKAJX-*3	250	Opp	103			328481X	Furnished	230XKAJX-*3	250	Opp	98				Furnished
230XQAJX-*3	250	Opp	136			328481X	Furnished	230XQAJX-*3	250	Opp	131				Furnished
230XUAJX-*3 (10)	155	Opp	218			328481X	Furnished	230XUAJX-*3 (10)	170	Opp	210				Furnished
238XAAHX-*3 (21)	250	Opp	67		(T)		Furnished	236XAAHX-*3 (21)	250	Opp	64				Furnished
238XDAHX-*3 (1)	250	Opp	100				Furnished	236XDAHX-*3 (1)	250	Opp	96				Furnished
238XKAHX-*3 (1)	250	Opp	129				Furnished	236XKAHX-*3 (1)	250	Opp	123				Furnished
238XQAHX-*3 (1)	250	Opp	164				Furnished	236XQAHX-*3 (1)	250	Opp	166				Furnished
885XBAHX-*3 (3)	500	Opp	65				Furnished	236XUAHX-*3 (1)	205	Opp	190				Furnished
885XGAHX-*3 (9)	500	Opp	84				Furnished								
885XJAHX-*3 (5)	500	Opp	99				Furnished								
885XMAHX-*3 (6)	500	Opp	116				Furnished								
ONE SPEED - FORWARD & REVERSE															
348XFAHX-*5 (26)	200	Opp	84	88	8-A-093(T)(31) 8-A-032(P)(31)		Furnished	340XFAHX-*5 (26)	200	Opp	80	84	7-A-140(30)		Furnished
352ZSAHX-*3 (1)	140	Opp	187	241		328564X	Furnished	352XSAHX-*3 (1)	140	Opp	179	231			Furnished
863XBAHX-*5	423	Opp	65	81			Furnished								

Continued Next Page

CAUTION: INPUT SIGNAL REQUIRED - In any case a PTO is used, regardless of PTO style, the transmission must have an input signal from the PTO when it is active. EATON requires the OEM to provide a "PTO Active" input connection to the transmission ECU. Refer to the Vehicle OEM for wire connection information and to Eaton TRIG2600 for Transmission/PTO Operations.

CAUTION: 660/680 Series: Applications above 1500 RPM output shaft speed, contact Chelsea Technical Service for approval. DO NOT use Standard Geared Adapters w/660 Series, contact Chelsea Technical Service.

NOTE: All PTO Torque Values Reflect the Higher Torque 750 Ft-lb [1017 Nm] Main Transmission Input Bearing for Intermittent Duty Cycles as Standard from Eaton for the Transmissions Listed for this Page. For Continuous Duty Cycles do not exceed 500 Ft-lb [678 Nm.]. Refer to the Chelsea PTO Torque Limit Chart in the front of this section for complete torque limit information.

NOTE: Eaton Automated 13 and 18 speeds cannot accept the Thrushaft Power Take-Offs. The bottom left countershaft opening is used for the splitter cylinder and the top right countershaft opening is used for the range.

NOTE: Optional front mount oil filter will interfere with 6-Bolt P.T.O installations. Rear or remote mount filter must be used.

NOTE: The 442XBAH must use one of the geared adapters listed on the application page. The direction of rotation shown is the final output shaft rotation w/ geared adapter.

(1) Input Gear Part No. 5-P-1004
(3) Input Gear Part No. 5-P-1100
(5) Input Gear Part No. 5-P-1102
(6) Input Gear Part No. 5-P-1103
(9) Input Gear Part No. 5-P-1135
(10) Input Gear Part No. 5-P-1144 required
(21) Input Gear Part No. 5-P-1486
(26) Input Gear Part No. 5-P-581
(30) Filler block furnished with P.T.O.
(31) Filler block furnished with P.T.O. but not

Parker Hannifin Corporation
Chelsea Products Division
Olive Branch, MS 38654 USA

FAO-11810C (Advantage Series)
FAO-12810C (Advantage Series)
FAO-13810C (Advantage Series)
FAO-14810C (Advantage Series)
FAO-15810C (Advantage Series)
FAO-16810C (Advantage Series)
FAO-16810S-EN3 (Advanatge Series Automated)
FAO-16810S-EP3 (Advantage Series Automated)
FAOF-11810C (Advantage Series)
FAOF-12810C (Advantage Series)
FAOF-13810C (Advantage Series)
FAOF-14810C (Advantage Series)
FAOF-15810C (Advantage Series)
FAOF-16810C (Advantage Series)
FAOM-14810C (Advantage Series)
FAOM-14810S-EC3 (Advantage Series Automated)
FAOM-15810C (Advantage Series)
FAOM-15810S-EC3 (Advantage Series Automated)
FAOM-15810S-EN3 (Advantage Series Automated)
FAOM-15810S-EP3 (Advantage Series Automated)
FAOM-16810C (Advantage Series)
FAOMF-14810C (Advantage Series)
FAOMF-15810C (Advantage Series)
FAOMF-16810C (Advantage Series)

BOTTOM SIDE ONLY

TRANSMISSION GEAR DATA:
BOT 08-BOLT Opening Gear FORWARD of Centerline
47 Teeth - SPUR

PITCH LINE TO APERTURE FACE:
0.8050" (20.4500MM)

RIGHT SIDE ONLY

TRANSMISSION GEAR DATA:
R.S. 06-BOLT Opening Gear FORWARD of Centerline
45 Teeth - SPUR

PITCH LINE TO APERTURE FACE:
1.0850" (27.5600MM)

Caution: Application Approval Required for PTO Output Shaft Speeds Above 2500 RPM

BOTTOM Side PTO Model	Inter. Torq.	Dir. Rot.	Engine %		Filler Block	Adapter Assy.	Stud Kit	RIGHT Side PTO Model	Inter. Torq.	Dir. Rot.	Engine %		Filler Block	Adapter Assy.	Stud Kit
			Fwd.	Rev.							Fwd.	Rev.			
GEARED ADAPTERS															
628XAHX-3AH	250	Eng	0		8-A-032		Furnished	626XAHX-3AH	250	Eng	0				Furnished
								630XAHX-3AH	250	Eng	0				Furnished
								645XAHX-3AH	250	Eng	0				Furnished

Continued Next Page

CAUTION: INPUT SIGNAL REQUIRED - In any case a PTO is used, regardless of PTO style, the transmission must have an input signal from the PTO when it is active. EATON requires the OEM to provide a "PTO Active" input connection to the transmission ECU. Refer to the Vehicle OEM for wire connection information and to Eaton TRIG2600 for Transmission/PTO Operations.

CAUTION: 660/680 Series: Applications above 1500 RPM output shaft speed, contact Chelsea Technical Service for approval. DO NOT use Standard Geared Adapters w/660 Series, contact Chelsea Technical Service.

NOTE: All PTO Torque Values Reflect the Higher Torque 750 Ft-lb [1017 Nm] Main Transmission Input Bearing for Intermittent Duty Cycles as Standard from Eaton for the Transmissions Listed for this Page. For Continuous Duty Cycles do not exceed 500 Ft-lb [678 Nm.]. Refer to the Chelsea PTO Torque Limit Chart in the front of this section for complete torque limit information.

NOTE: Eaton Automated 13 and 18 speeds cannot accept the Thrushaft Power Take-Offs. The bottom left countershaft opening is used for the splitter cylinder and the top right countershaft opening is used for the range.

NOTE: Optional front mount oil filter will interfere with 6-Bolt P.T.O installations. Rear or remote mount filter must be used.

NOTE: The 442XBAH must use one of the geared adapters listed on the application page. The direction of rotation shown is the final output shaft rotation w/ geared adapter.

Parker Hannifin Corporation
Chelsea Products Division
Olive Branch, MS 38654 USA

FAO-11810C (Advantage Series)
FAO-12810C (Advantage Series)
FAO-13810C (Advantage Series)
FAO-14810C (Advantage Series)
FAO-15810C (Advantage Series)
FAO-16810C (Advantage Series)
FAO-16810S-EN3 (Advanatge Series Automated)
FAO-16810S-EP3 (Advantage Series Automated)

FAOF-11810C (Advantage Series)
FAOF-12810C (Advantage Series)
FAOF-13810C (Advantage Series)
FAOF-14810C (Advantage Series)
FAOF-15810C (Advantage Series)
FAOF-16810C (Advantage Series)
FAOM-14810C (Advantage Series)
FAOM-14810S-EC3 (Advantage Series Automated)

FAOM-15810C (Advantage Series)
FAOM-15810S-EC3 (Advantage Series Automated)
FAOM-15810S-EN3 (Advantage Series Automated)
FAOM-15810S-EP3 (Advantage Series Automated)
FAOM-16810C (Advantage Series)
FAOMF-14810C (Advantage Series)
FAOMF-15810C (Advantage Series)
FAOMF-16810C (Advantage Series)

REAR SIDE ONLY

TRANSMISSION GEAR DATA:
REAR 00-BOLT Opening

PITCH LINE TO APERTURE FACE:

Caution: Application Approval Required for PTO Output Shaft Speeds Above 2500 RPM

REAR Side PTO Model	Inter. Torq.	Dir. Rot.	Engine %		Filler Block	Adapter Assy.	Stud Kit		Inter. Torq.	Dir. Rot.	Engine %		Filler Block	Adapter Assy.	Stud Kit
			Fwd.	Rev.							Fwd.	Rev.			
REAR MOUNT - "BD" MOUNTING OPTION															
541-LBD-*-*	400	Eng	76				Furnished								
541-MBD-*-*	350	Eng	98				Furnished								
541-NBD-*-*	300	Eng	112				Furnished								
REAR MOUNT - MECHANICAL SHIFT (10 SPEED TRANSMISSIONS)															
541-LAT-*-*	400	Eng	76				Furnished								
541-MAT-*-*	350	Eng	98				Furnished								
541-NAT-*-*	300	Eng	112				Furnished								

CAUTION: INPUT SIGNAL REQUIRED - In any case a PTO is used, regardless of PTO style, the transmission must have an input signal from the PTO when it is active. EATON requires the OEM to provide a "PTO Active" input connection to the transmission ECU. Refer to the Vehicle OEM for wire connection information and to Eaton TRIG2600 for Transmission/PTO Operations.

CAUTION: 660/680 Series: Applications above 1500 RPM output shaft speed, contact Chelsea Technical Service for approval. DO NOT use Standard Geared Adapters w/660 Series, contact Chelsea Technical Service.

NOTE: All PTO Torque Values Reflect the Higher Torque 750 Ft-lb [1017 Nm] Main Transmission Input Bearing for Intermittent Duty Cycles as Standard from Eaton for the Transmissions Listed for this Page. For Continuous Duty Cycles do not exceed 500 Ft-lb [678 Nm.]. Refer to the Chelsea PTO Torque Limit Chart in the front of this section for complete torque limit information.

NOTE: Eaton Automated 13 and 18 speeds cannot accept the Thrushaft Power Take-Offs. The bottom left countershaft opening is used for the splitter cylinder and the top right countershaft opening is used for the range.

NOTE: Optional front mount oil filter will interfere with 6-Bolt P.T.O installations. Rear or remote mount filter must be used.

NOTE: The 442XBAH must use one of the geared adapters listed on the application page. The direction of rotation shown is the final output shaft rotation w/ geared adapter.

Parker Hannifin Corporation
Chelsea Products Division
Olive Branch, MS 38654 USA

FO-16D313E-LEP (UltraShift)
FOM-16D313E-LEP (UltraShift)
RTLO-16913L-DM3 (UltraShift)
RTLOM-16913L-DM3 (UltraShift)

RIGHT SIDE ONLY

TRANSMISSION GEAR DATA:
R.S. 06-BOLT Opening Gear FORWARD of Centerline
45 Teeth - SPUR

PITCH LINE TO APERTURE FACE:
1.0850" (27.5600MM)

Caution: Application Approval Required for PTO Output Shaft Speeds Above 2500 RPM

	Inter. Torq.	Dir. Rot.	Engine % Fwd.	Engine % Rev.	Filler Block	Adapter Assy.	Stud Kit	RIGHT Side PTO Model	Inter. Torq.	Dir. Rot.	Engine % Fwd.	Engine % Rev.	Filler Block	Adapter Assy.	Stud Kit
ONE SPEED - TWO GEAR - MECHANICAL SHIFT															
								221XCAHX-*3	250	Eng	66		7-A-032(P)(29)	329138X	Furnished
								221XEAHX-*3	250	Eng	76			329138X	Furnished
								221XLAHX-*3	200	Eng	102			329138X	Furnished
								221XPAHX-*3	200	Eng	124			329138X	Furnished
								442XAAHX-*3 (12)	250	Opp	58				Furnished
								442XBAHX-*3 (18)	250	Eng	58			REQUIRED	Furnished
								442XCAHX-*3 (13)	250	Opp	74				Furnished
								442XFAHX-*3 (2)	250	Opp	92				Furnished
								442XHAHX-*3 (15)	250	Opp	107				Furnished
								442XLAHX-*3 (1)	250	Opp	119				Furnished
								442XQAHX-*3 (1)	225	Opp	128				Furnished
								442XRAHX-*3 (1)	225	Opp	148				Furnished
								660XFAHX-*3 (10)	375	Opp	92				Furnished
								660XHAHX-*3 (15)	330	Opp	107				Furnished
								660XQAHX-*3 (11)	280	Opp	128				Furnished
								660XRAHX-*3 (19)	235	Opp	148				Furnished
ONE SPEED - TWO GEAR POWERSHIFT (AIR OR HYDRAULIC)															
								272XAAJX-*3	300	Opp	51				Furnished
								272XBAJX-*3	300	Opp	63				Furnished
								272XCAJX-*3	300	Opp	76				Furnished
								272XDAJX-*3	300	Opp	90				Furnished
								272XGAJX-*3	300	Opp	108				Furnished
								272XKAJX-*3	300	Opp	120				Furnished
								272XMAJX-*3	300	Opp	135				Furnished
								272XPAJX-*3	300	Opp	150				Furnished
								272XSAJX-*3	300	Opp	168				Furnished
ONE SPEED - TWO GEAR - POWERSHIFT (AIR)															
								230XAAJX-*3	250	Opp	48				Furnished
								230XBAJX-*3	250	Opp	63				Furnished
								230XDAJX-*3	250	Opp	73				Furnished

Continued Next Page

CAUTION: INPUT SIGNAL REQUIRED - The Eaton UltraShift Transmissions must have an input signal from the Power Take-Off when it is active. In this active state, the clutch engagement is controlled when the operator raises the engine speed to engage the clutch and drive the transmission main box countershaft, per EATON spec. "TRIG-2600". INCORRECT or NO PTO interface signal to the transmission will result in uncontrolled engagement of the clutch during PTO operation.

CAUTION: 660 Series: Applications above 1500 RPM output shaft speed, contact Chelsea Technical Service for approval. DO NOT use Standard Geared Adapters w/660 Series, contact Chelsea Technical Service.

NOTE: UltraShift 13-Speeds DM3, LHP & LEP: Inertia brake is installed on the 8-Bolt Opening. Interia brake cannot be moved to the 6-Bolt Opening due to gear interference.

NOTE: Eaton Automated 13 and 18 speeds cannot accept the Thrushaft Power Take-Offs. The bottom left countershaft opening is used for the splitter cylinder and the top right countershaft opening is used for the range.

NOTE: 6-Bolt PTO will interfere with front mount oil filter. Rear or remote mount filter must be used

NOTE: The 422XBAH Must Use One of the Geared Adapters Listed on the Application Page. Direction of Rotation Shown is the Final Output Shaft Rotation w/ Geared Adapter.

(1) Input Gear Part No. 5-P-1004
(2) Input Gear Part No. 5-P-1077
(10) Input Gear Part No. 5-P-1242
(11) Input Gear Part No. 5-P-1246
(12) Input Gear Part No. 5-P-1280
(13) Input Gear Part No. 5-P-1287
(15) Input Gear Part No. 5-P-1364
(18) Input Gear Part No. 5-P-1418
(19) Input Gear Part No. 5-P-1441
(29) Filler block furnished with P.T.O.

Parker Hannifin Corporation
Chelsea Products Division
Olive Branch, MS 38654 USA

FO-16D313E-LEP (UltraShift)
FOM-16D313E-LEP (UltraShift)
RTLO-16913L-DM3 (UltraShift)
RTLOM-16913L-DM3 (UltraShift)

RIGHT SIDE ONLY

TRANSMISSION GEAR DATA:
R.S. 06-BOLT Opening Gear FORWARD of Centerline
45 Teeth - SPUR

PITCH LINE TO APERTURE FACE:
1.0850" (27.5600MM)

Caution: Application Approval Required for PTO Output Shaft Speeds Above 2500 RPM

	Inter. Torq.	Dir. Rot.	Engine % Fwd.	Engine % Rev.	Filler Block	Adapter Assy.	Stud Kit	RIGHT Side PTO Model	Inter. Torq.	Dir. Rot.	Engine % Fwd.	Engine % Rev.	Filler Block	Adapter Assy.	Stud Kit
ONE SPEED - TWO GEAR - POWERSHIFT (AIR)															
								230XKAJX-*3	250	Opp	98				Furnished
								230XQAJX-*3	250	Opp	131				Furnished
								230XUAJX-*3 (9)	170	Opp	210				Furnished
								236XAAHX-*3 (20)	250	Opp	64				Furnished
								236XDAHX-*3 (1)	250	Opp	96				Furnished
								236XKAHX-*3 (1)	250	Opp	123				Furnished
ONE SPEED - FORWARD & REVERSE															
								340XFAHX-*5 (25)	200	Opp	80	84	7-A-140(29)		Furnished
								352XSAHX-*3 (1)	140	Opp	179	231			Furnished
GEARED ADAPTERS															
								626XAHX-3AH	250	Eng	0				Furnished
								630XAHX-3AH	250	Eng	0				Furnished
								645XAHX-3AH	250	Eng	0				Furnished

CAUTION: INPUT SIGNAL REQUIRED - The Eaton UltraShift Transmissions must have an input signal from the Power Take-Off when it is active. In this active state, the clutch engagement is controlled when the operator raises the engine speed to engage the clutch and drive the transmission main box countershaft, per EATON spec. "TRIG-2600". INCORRECT or NO PTO interface signal to the transmission will result in uncontrolled engagement of the clutch during PTO operation.

CAUTION: 660 Series: Applications above 1500 RPM output shaft speed, contact Chelsea Technical Service for approval. DO NOT use Standard Geared Adapters w/660 Series, contact Chelsea Technical Service.

NOTE: UltraShift 13-Speeds DM3, LHP & LEP: Inertia brake is installed on the 8-Bolt Opening. Interia brake cannot be moved to the 6-Bolt Opening due to gear interference.

NOTE: Eaton Automated 13 and 18 speeds cannot accept the Thrushaft Power Take-Offs. The bottom left countershaft opening is used for the splitter cylinder and the top right countershaft opening is used for the range.

NOTE: 6-Bolt PTO will interfere with front mount oil filter. Rear or remote mount filter must be used

NOTE: The 422XBAH Must Use One of the Geared Adapters Listed on the Application Page. Direction of Rotation Shown is the Final Output Shaft Rotation w/ Geared Adapter.

(1) Input Gear Part No. 5-P-1004
(9) Input Gear Part No. 5-P-1144
(20) Input Gear Part No. 5-P-1486
(25) Input Gear Part No. 5-P-581
(29) Filler block furnished with P.T.O.

Parker Hannifin Corporation
Chelsea Products Division
Olive Branch, MS 38654 USA

NOTES



Eaton Fuller

Parker Hannifin Corporation
Chelsea Products Division
Olive Branch, MS 38654 USA

FORD



Parker | Chelsea

ENGINEERING YOUR SUCCESS.

Ford

⚠ WARNING — User Responsibility

FAILURE OR IMPROPER SELECTION OR IMPROPER USE OF THE PRODUCTS DESCRIBED HEREIN OR RELATED ITEMS CAN CAUSE DEATH, PERSONAL INJURY AND PROPERTY DAMAGE.

This document and other information from Parker-Hannifin Corporation, its subsidiaries and authorized distributors provide product or system options for further investigation by users having technical expertise.

The user, through its own analysis and testing, is solely responsible for making the final selection of the system and components and assuring that all performance, endurance, maintenance, safety and warning requirements of the application are met. The user must analyze all aspects of the application, follow applicable industry standards, and follow the information concerning the product in the current product catalog and in any other materials provided from Parker or its subsidiaries or authorized distributors.

To the extent that Parker or its subsidiaries or authorized distributors provide component or system options based upon data or specifications provided by the user, the user is responsible for determining that such data and specifications are suitable and sufficient for all applications and reasonably foreseeable uses of the components or systems.

Offer of Sale

The items described in this document are hereby offered for sale by Parker Hannifin Corporation, its subsidiaries or its authorized distributors. This offer and its acceptance are governed by the provisions stated in the "Offer of Sale".

© Copyright 2016, Parker Hannifin Corporation, All Rights Reserved

Parker Hannifin Corporation
Chelsea Products Division
Olive Branch, MS 38654 USA

Transmission Make and Model	PTO Appl. Number	Number Forward Speeds	Teeth in PTO Driver
5R110WOJ233 (Ford Mexico)	FRD-9	5	L121
TORQSHIFT - 5R110 Model Year 2003-2010 Super Duty Gas or Diesel	FRD-9	5	L121
TORQSHIFT - 5R110 Model Year 2011 and Later Super Duty Gas Only	FRD-9	5	L121
TORQSHIFT 6 (Ford Medium Duty F-650/750 MY2013 and Later - 6.8L Gas Engine)	FRD-11	6	L52
TORQSHIFT 6 (Ford Super Duty MY2011 and Later - 6.7L Diesel Only)	FRD-10	6	L52

IMPORTANT: See Safety Information in Section 1 of the Chelsea Applications catalog HY25-3000/US.

Transmission PTO Driver & Apertures (Viewed from Rear of Transmission)

L-Left Side R-Right Side B-Bottom Side T-Top Side CS-Countershaft

For transmissions not listed, contact your authorized Chelsea Distributor.

Parker Hannifin Corporation
Chelsea Products Division
Olive Branch, MS 38654 USA

5R110WOJ233 (Ford Mexico)
TORQSHIFT - 5R110 Model Year 2003-2010 Super Duty Gas or Diesel
TORQSHIFT - 5R110 Model Year 2011 and Later Super Duty Gas Only

LEFT SIDE ONLY

TRANSMISSION GEAR DATA:
L.S. 06-BOLT Opening Gear REAR of Centerline
121 Teeth - SPUR

PITCH LINE TO APERTURE FACE:
1.3390" (33.7800MM)

Caution: Application Approval Required for PTO Output Shaft Speeds Above 2500 RPM

LEFT Side PTO Model	Inter. Torq.	Dir. Rot.	Engine % Fwd.	Engine % Rev.	Filler Block	Adapter Assy.	Stud Kit		Inter. Torq.	Dir. Rot.	Engine % Fwd.	Engine % Rev.	Filler Block	Adapter Assy.	Stud Kit
ONE SPEED - TWO GEAR - POWERSHIFT (HYDRAULIC)															
247FMKSP-*2 (1)	120	Opp	154				Furnished								
247FMKSP-*4 (1)	120	Opp	154				Furnished								

Chelsea CGP-P11 Series Pump Specifications for 4 x 4 or 4 x 2 Vehicles (3/4" - 11 Tooth Pump Spline)

Order Code w/ PTO (C)	Chelsea Pump Model	Displacement in³/rev	GPM (A)	Pump (A) HP	Torque (A) ft-lbs	Pressure PSI		Max Speed RPM		Max Pump Flow GPM
						Intermittent	Continuous	Pump	Engine (B)	
16	CGP-P11A016-5FC	0.37	2.66	5.6	16.0	3990	3625	4000	2597	6.4
26	CGP-P11A026-5FC	0.61	4.39	9.3	26.4	3990	3625	3600	2338	9.5
37	CGP-P11A037-5FC	0.85	6.12	12.9	36.8	3990	3625	3300	2143	12.1
42	CGP-P11A042-5FC	0.98	7.06	14.9	42.4	3990	3625	3000	1948	12.7
55	CGP-P11A055-5FC	1.28	9.22	18.3	52.1	3480	3410	2800	1818	15.5
61	CGP-P11A061-5FE	1.40	10.08	19.2	54.6	3410	3265	2800	1818	17.0
71	CGP-P11A071-5FE	1.65	11.88	19.1	54.3	2900	2755	2400	1558	17.1
82	CGP-P11A082-5FE	1.89	13.61	19.0	54.0	2465	2395	2300	1494	18.8
87	CGP-P11A087-5FE	2.01	14.47	19.0	54.0	2320	2250	2000	1299	17.4

Chelsea FGP-17 Series Pump Specifications for 4 x 2 Vehicles Only (7/8" - 13 Tooth Pump Spline)

Order Code w/ PTO	Chelsea Pump Model	Displacement in³/rev	GPM (A)	Pump (A) HP	Torque (A) ft-lbs	Pressure PSI		Max Speed RPM		Max Pump Flow GPM
						Intermittent	Continuous	Pump	Engine (B)	
66	FGP-P17A066-2AN	1.53	11.02	23.3	66.2	3625	3625	3100	2013	20.53
87	FGP-P17A087-2AN	2.01	14.47	30.6	87.0	3625	3625	3100	2013	26.97
14	FGP-P17A137-2AN	3.14	22.61	38.3	108.7	2900	2900	2600	1688	35.34

NOTE: FGP-P17 Pumps have a special housing design for mounting to the Ford TorqShift transmission.
(A) GPM & Pump Input HP @ **1200 Engine RPM (1848 PTO Output RPM - 154% Ratio)** & Continuous Pressure Rating with **90% Pump Efficiency** considered.
(B) Max Engine Speed = (Max Pump Speed) / (1.54) for PTO Ratio Increase
(C) For Pump Codes 61, 71, 82 & 86 - 45 degree fittings are required to connect hydraulic hoses for clearance. Order Kit number 329667X

FORMULAS:
GPM = Cu. In. x .004329 = G/Rev x 1848 RPMs x .90 efficiency
HP = (GPM x Max PSI) / 1714
Torque = (HP x 5252) / 1848 RPMs

WARNING: To guarantee full torque capability at the automatic transmission PTO gear, and the PTO, the TorqShift transmission torque converter must be locked (Engine RPM @ 1200 RPM), and hydraulic line pressure to the PTO clutch must be elevated to a minimum of 110 psi. On both Diesel and Gas engines, the Stationary Elevated Idle Control (SEIC) strategy is 1200 RPM. Therefore, for stationary operations, a discrete signal, which is supplied with Chelsea 247 wire harness 329598X, must be used to elevate engine idle to a minimum of 1200 RPM. Battery voltage must be applied to the PTO circuit to begin SEIC strategy for both mobile and stationary applications. Failure to follow these procedures may lead to PTO clutch wear and internal damage to the PTO/Transmission. See Chelsea Owner's/Installation Manual HY25-1715-M1/US or Contact Chelsea Technical Services (662-895-1052) for complete details.

NOTE: Standard Parker PGP-P17 pumps may interfere with the transmission shift lever, order Chelsea FGP-P17 Series pumps to assure shifter clearance.

NOTE: The PTO mounting gasket (22-P-120) is supplied with the PTO. It is the correct thickness and material so that the customer does not have to set backlash. DO NOT use gasket supplied with the transmission under the 6-bolt cover plate.

NOTE: 247FMKSP-*2 -- 4 x 2 applications: all output options and all pumps listed in the pump chart are available.

NOTE: 247FMKSP-*4 -- 4 x 4 applications will only work with a modified PGP-P11 (CGP-P11) pump. Use one of the following output option codes when ordering: 16, 26, 32, 37, 42, 55, 61, 71, 82, 86 (See Pump Chart).

NOTE: Ford provides an option for the use of one of the "Upfitter" Switches to be used as a PTO switch. Chelsea does not recommend the use of the UNPROTECTED switch for PTO function, but if required, contact Chelsea Technical Services for assistance.(662-895-1052)

(1) Input Gear Part No. 5-P-1387

Parker Hannifin Corporation
Chelsea Products Division
Olive Branch, MS 38654 USA

TORQSHIFT 6 (Ford Super Duty MY2011 and Later - 6.7L Diesel Only)

LEFT SIDE ONLY

TRANSMISSION GEAR DATA:
L.S. 06-BOLT Opening Gear FORWARD of Centerline
52 Teeth - SPUR

PITCH LINE TO APERTURE FACE:
3.4550" (87.7640MM)

Caution: Application Approval Required for PTO Output Shaft Speeds Above 2500 RPM

LEFT Side PTO Model	Inter. Torq.	Dir. Rot.	Engine % Fwd.	Engine % Rev.	Filler Block	Adapter Assy.	Stud Kit		Inter. Torq.	Dir. Rot.	Engine % Fwd.	Engine % Rev.	Filler Block	Adapter Assy.	Stud Kit
ONE SPEED - TWO GEAR - POWERSHIFT (HYDRAULIC)															
249FMLLX-*2 (1)	200	Opp	124				Furnished								
249FMLLX-*4 (1)	200	Opp	124				Furnished								
249FMLLX-*V (1)	200	Opp	124				Furnished								

See next page for more pump options.

Continued Next Page

CAUTION: Mobile and Stationary Mode Operations are Supported. The Maximum Load (Torque) Allowable for Mobile Mode is 150 Ft.lbs at the Transmission PTO Gear and 120 Ft.lbs at the PTO Output. If the PTO Feature is Used for Extended Periods of Time Without Vehicle Movement it is Recommended to Switch to Stationary Mode. In Stationary Mode Maximum Load (Torque) is 250 Ft.lbs at the Transmission PTO Gear and 200 Ft.lbs at the PTO Output.

NOTE: Ford provides an option for the use of one of the "Upfitter" Switches to be used as a PTO switch. Chelsea does not recommend the use of the UNPROTECTED switch for PTO function, but if required, contact Chelsea Technical Services for assistance.(662-895-1052)

NOTE: 249FMLLX-*2 -- 4 x 2 applications, all output options and all gear pumps listed in the pump chart are available.

NOTE: 249FMLLX-*4 -- 4 x 4 applications only and will come with a modified PGP-P11 (CGP-P11) gear pump with the PTO from the factory when one of the following output option codes is ordered; 16,26,32,37,42,55,61,71,82,87 (See Pump Chart). Or one of the following output shafts "XD","XP" or "AD".

NOTE: 249FMLLX-*V-- Both 4 x 2 and 4 x 4 applications. 249 Series with integral vane pump options (See Pump Chart).

(1) Input Gear Part No. 5-P-1436

Parker Hannifin Corporation
Chelsea Products Division
Olive Branch, MS 38654 USA

TORQSHIFT 6 (Ford Super Duty MY2011 and Later - 6.7L Diesel Only)

LEFT SIDE ONLY

TRANSMISSION GEAR DATA:
L.S. 06-BOLT Opening Gear FORWARD of Centerline
52 Teeth - SPUR

PITCH LINE TO APERTURE FACE:
3.4550" (87.7640MM)

Caution: Application Approval Required for PTO Output Shaft Speeds Above 2500 RPM

LEFT Side PTO Model	Inter. Torq.	Dir. Rot.	Engine %		Filler Block	Adapter Assy.	Stud Kit		Inter. Torq.	Dir. Rot.	Engine %		Filler Block	Adapter Assy.	Stud Kit
			Fwd.	Rev.							Fwd.	Rev.			

Pump Option Charts

Chelsea CGP-P11 Series Pump Specifications for 4x2 and 4x4 Vehicles (3/4" - 11 Tooth Pump Spline)

Order Code w/ PTO (C)	Chelsea Pump Model	Displacement in³/rev	GPM (A)	Pump (A) HP	Torque (A) ft-lbs	Pressure PSI		Max Speed RPM		Max Pump Flow GPM
						Intermittent	Continuous	Pump	Engine (B)	
16	CGP-P11A016-5GC	0.37	2.15	4.5	16.0	3990	3625	4000	3226	6.41
26	CGP-P11A026-5GC	0.61	3.54	7.5	26.4	3990	3625	3600	2903	9.51
32	CGP-P11A032-5GC	0.73	4.23	9.0	31.6	3990	3625	3500	2823	11.06
37	CGP-P11A037-5GC	0.85	4.93	10.4	36.8	3990	3625	3300	2661	12.14
42	CGP-P11A042-5GC	0.98	5.68	12.0	42.4	3990	3625	3000	2419	12.73
55	CGP-P11A055-5GC	1.28	7.42	14.8	52.1	3480	3410	2800	2258	15.52
61	CGP-P11A061-5GE	1.40	8.12	15.5	54.6	3410	3265	2800	2258	16.97
71	CGP-P11A071-5GE	1.65	9.57	15.4	54.3	2900	2755	2400	1935	17.14
82	CGP-P11A082-5GE	1.89	10.96	15.3	54.0	2465	2395	2300	1855	18.82
87	CGP-P11A087-5GE	2.01	11.65	15.3	54.0	2320	2250	2000	1613	17.40

Chelsea PGP-315 Series Pump Specifications for 4x2 Vehicles Only (3/4" - 11 Tooth Pump Spline)

Order Code w/ PTO	Chelsea Pump Model	Displacement in³/rev	GPM (A)	Pump (A) HP	Torque (A) ft-lbs	Pressure PSI		Max Speed RPM		Max Pump Flow GPM
						Intermittent	Continuous	Pump	Engine (B)	
08	CGP-P31B081-5AG	1.86	10.78	20.8	73.3	3300	3300	3000	2419	24.16
09	CGP-P31B094-5AG	2.17	12.58	21.3	75.1	2900	2900	3000	2419	28.18
11	CGP-P31B107-5AG	2.48	14.38	21.0	74.0	2500	2500	3000	2419	32.21

Chelsea P16 Series Pump Specifications for 4x2 Vehicles Only (7/8" - 13 Tooth Pump Spline)

Order Code w/ PTO	Chelsea Pump Model	Displacement in³/rev	GPM (A)	Pump (A) HP	Torque (A) ft-lbs	Pressure PSI		Max Speed RPM		Max Pump Flow GPM
						Intermittent	Continuous	Pump	Engine (B)	
15	P16-150A-2D1	2.93	16.99	29.7	104.9	3000	3000	2800	2258	35.52

Chelsea 249 "V" Integral Vane Pump Data for 4x2 or 4x4 Vehicles

Order Code w/ PTO	Chelsea Pump Cartridge Number	Displacement in³/rev	GPM (D)	Pump (D) HP	Torque (D) ft-lbs	Pressure PSI		Pump Speed RPM		Max Speed RPM
						Intermittent	Continuous	Min.	Max	Engine (B)
14	380418-14	2.81	17.20	35.1	123.9	4000	3500	400	2800	2258
17	380418-17	3.56	21.79	44.5	157.0	4000	3500	400	2800	2258
20	380418-20	3.89	23.80	48.6	171.6	4000	3500	400	2800	2258
22	380418-22	4.29	26.25	53.6	189.2	4000	3500	400	2800	2258

(A) GPM & Pump Input HP @ **1200 Engine RPM (1488 PTO Output RPM - 124% Ratio)** & Continuous Pressure Rating with **90% efficiency rating** considered.
(B) Max Engine Speed = (Max Pump Speed) / (1.24) for PTO Ratio Increase
(C) For Pump Codes 61, 71, 82 & 87 - 45 degree fittings are required to connect hydraulic hoses for clearance. Order Kit number 329667X
(D) GPM & Pump Input HP @ **1200 Engine RPM (1488 PTO Output RPM - 124% Ratio)** & Continuous Pressure Rating with **94% efficiency rating** considered.

CAUTION: 249 "V" Pump Options: "The PTO drive gear delivers up to 250 Lbs. ft. torque to the aftermarket PTO, and can manage the heat of 40 HP continuously. Higher horsepower can be delivered, but for shorter durations depending on the amount of power required." Ref: Ford Body Builders Manual; TorqShift Automatic Transmission.
NOTE: Refer to Chelsea Owner's Manual HY25-1249-M1/US for complete vane pump information.

FORMULAS:
GPM = Cu. In. x .004329 = G/Rev x 1488 RPMs x .90 efficiency (249V = .94)
HP = (GPM x Max PSI) / 1714
Torque = (HP x 5252) / 1488 RPMs

Parker Hannifin Corporation
Chelsea Products Division
Olive Branch, MS 38654 USA

TORQSHIFT 6 (Ford Medium Duty F-650/750 MY2013 and Later - 6.8L Gas Engine)

LEFT SIDE ONLY

TRANSMISSION GEAR DATA:
L.S. 06-BOLT Opening Gear FORWARD of Centerline
52 Teeth - SPUR

PITCH LINE TO APERTURE FACE:
3.4550" (87.7640MM)

Caution: Application Approval Required for PTO Output Shaft Speeds Above 2500 RPM

LEFT Side PTO Model	Inter. Torq.	Dir. Rot.	Engine % Fwd.	Engine % Rev.	Filler Block	Adapter Assy.	Stud Kit		Inter. Torq.	Dir. Rot.	Engine % Fwd.	Engine % Rev.	Filler Block	Adapter Assy.	Stud Kit
ONE SPEED - TWO GEAR - POWERSHIFT (HYDRAULIC)															
249GMLLX-*2 (1)	200	Opp	124				Furnished								
249GMLLX-*V (1)	200	Opp	124				Furnished								

See next page for more pump options.

Continued Next Page

CAUTION: Only Stationary Mode Operations are Supported. The Maximum Load (Torque) In Stationary Mode is 250 Ft.lbs at the Transmission PTO Gear and 200 Ft.lbs at the PTO Output.

NOTE: Ford Does Not Recommend PTO Operation At or Below 900 rpm for the 6.8L Gas Engine. Minimum Engine Speed 910 rpm and Maximum 2400 rpm. Reference Ford Bulletin Q-215 for Latest Information.

NOTE: For MY2013 Ford F-650 4 x 2 w/Gas engine will come with a 6R140 transmission. This will require a heat shield (329790X) to protect the PTO from the exhaust. Also a new Chelsea wiring harness (329789X) will be required. These are included with the PTO when ordering the 249"G" mounting option.

NOTE: 249GMLLX-*2 -- 4 x 2 applications, all output options and all pumps listed in the pump chart are available.

NOTE: Ford provides an option for the use of one of the "Upfitter" Switches to be used as a PTO switch. Chelsea does not recommend the use of the UNPROTECTED switch for PTO function, but if required, contact Chelsea Technical Services for assistance.(662-895-1052)

(1) Input Gear Part No. 5-P-1436

Parker Hannifin Corporation
Chelsea Products Division
Olive Branch, MS 38654 USA

TORQSHIFT 6 (Ford Medium Duty F-650/750 MY2013 and Later - 6.8L Gas Engine)

LEFT SIDE ONLY

TRANSMISSION GEAR DATA:
L.S. 06-BOLT Opening Gear FORWARD of Centerline
52 Teeth - SPUR

PITCH LINE TO APERTURE FACE:
3.4550" (87.7640MM)

Caution: Application Approval Required for PTO Output Shaft Speeds Above 2500 RPM

LEFT Side PTO Model	Inter. Torq.	Dir. Rot.	Engine %		Filler Block	Adapter Assy.	Stud Kit		Inter. Torq.	Dir. Rot.	Engine %		Filler Block	Adapter Assy.	Stud Kit
			Fwd.	Rev.							Fwd.	Rev.			

Pump Option Charts

Chelsea CGP-P11 Series Pump Specifications for 4x2 and 4x4 Vehicles (3/4" - 11 Tooth Pump Spline)

Order Code w/ PTO (C)	Chelsea Pump Model	Displacement in³/rev	GPM (A)	Pump (A) HP	Torque (A) ft-lbs	Pressure PSI		Max Speed RPM		Max Pump Flow GPM
						Intermittent	Continuous	Pump	Engine (B)	
16	CGP-P11A016-5GC	0.37	2.15	4.5	16.0	3990	3625	4000	3226	6.41
26	CGP-P11A026-5GC	0.61	3.54	7.5	26.4	3990	3625	3600	2903	9.51
32	CGP-P11A032-5GC	0.73	4.23	9.0	31.6	3990	3625	3500	2823	11.06
37	CGP-P11A037-5GC	0.85	4.93	10.4	36.8	3990	3625	3300	2661	12.14
42	CGP-P11A042-5GC	0.98	5.68	12.0	42.4	3990	3625	3000	2419	12.73
55	CGP-P11A055-5GC	1.28	7.42	14.8	52.1	3480	3410	2800	2258	15.52
61	CGP-P11A061-5GE	1.40	8.12	15.5	54.6	3410	3265	2800	2258	16.97
71	CGP-P11A071-5GE	1.65	9.57	15.4	54.3	2900	2755	2400	1935	17.14
82	CGP-P11A082-5GE	1.89	10.96	15.3	54.0	2465	2395	2300	1855	18.82
87	CGP-P11A087-5GE	2.01	11.65	15.3	54.0	2320	2250	2000	1613	17.40

Chelsea PGP-315 Series Pump Specifications for 4x2 Vehicles Only (3/4" - 11 Tooth Pump Spline)

Order Code w/ PTO	Chelsea Pump Model	Displacement in³/rev	GPM (A)	Pump (A) HP	Torque (A) ft-lbs	Pressure PSI		Max Speed RPM		Max Pump Flow GPM
						Intermittent	Continuous	Pump	Engine (B)	
08	CGP-P31B081-5AG	1.86	10.78	20.8	73.3	3300	3300	3000	2419	24.16
09	CGP-P31B094-5AG	2.17	12.58	21.3	75.1	2900	2900	3000	2419	28.18
11	CGP-P31B107-5AG	2.48	14.38	21.0	74.0	2500	2500	3000	2419	32.21

Chelsea P16 Series Pump Specifications for 4x2 Vehicles Only (7/8" - 13 Tooth Pump Spline)

Order Code w/ PTO	Chelsea Pump Model	Displacement in³/rev	GPM (A)	Pump (A) HP	Torque (A) ft-lbs	Pressure PSI		Max Speed RPM		Max Pump Flow GPM
						Intermittent	Continuous	Pump	Engine (B)	
15	P16-150A-2D1	2.93	16.99	29.7	104.9	3000	3000	2800	2258	35.52

Chelsea 249 "V" Integral Vane Pump Data for 4x2 or 4x4 Vehicles

Order Code w/ PTO	Chelsea Pump Cartridge Number	Displacement in³/rev	GPM (D)	Pump (D) HP	Torque (D) ft-lbs	Pressure PSI		Pump Speed RPM		Max Speed RPM
						Intermittent	Continuous	Min.	Max	Engine (B)
14	380418-14	2.81	17.20	35.1	123.9	4000	3500	400	2800	2258
17	380418-17	3.56	21.79	44.5	157.0	4000	3500	400	2800	2258
20	380418-20	3.89	23.80	48.6	171.6	4000	3500	400	2800	2258
22	380418-22	4.29	26.25	53.6	189.2	4000	3500	400	2800	2258

(A) GPM & Pump Input HP @ **1200 Engine RPM (1488 PTO Output RPM - 124% Ratio)** & Continuous Pressure Rating with **90% efficiency rating** considered.
(B) Max Engine Speed = (Max Pump Speed) / (1.24) for PTO Ratio Increase
(C) For Pump Codes 61, 71, 82 & 87 - 45 degree fittings are required to connect hydraulic hoses for clearance. Order Kit number 329667X
(D) GPM & Pump Input HP @ **1200 Engine RPM (1488 PTO Output RPM - 124% Ratio)** & Continuous Pressure Rating with **94% efficiency rating** considered.

CAUTION: 249 "V" Pump Options: "The PTO drive gear delivers up to 250 Lbs. ft. torque to the aftermarket PTO, and can manage the heat of 40 HP continuously. Higher horsepower can be delivered, but for shorter durations depending on the amount of power required." Ref: Ford Body Builders Manual; TorqShift Automatic Transmission.
NOTE: Refer to Chelsea Owner's Manual HY25-1249-M1/US for complete vane pump information.

FORMULAS:
GPM = Cu. In. x .004329 = G/Rev x 1488 RPMs x .90 efficiency (249V = .94)
HP = (GPM x Max PSI) / 1714
Torque = (HP x 5252) / 1488 RPMs

Parker Hannifin Corporation
Chelsea Products Division
Olive Branch, MS 38654 USA

HINO



Parker Chelsea

ENGINEERING YOUR SUCCESS.

Hino

⚠ WARNING — User Responsibility

FAILURE OR IMPROPER SELECTION OR IMPROPER USE OF THE PRODUCTS DESCRIBED HEREIN OR RELATED ITEMS CAN CAUSE DEATH, PERSONAL INJURY AND PROPERTY DAMAGE.

This document and other information from Parker-Hannifin Corporation, its subsidiaries and authorized distributors provide product or system options for further investigation by users having technical expertise.

The user, through its own analysis and testing, is solely responsible for making the final selection of the system and components and assuring that all performance, endurance, maintenance, safety and warning requirements of the application are met. The user must analyze all aspects of the application, follow applicable industry standards, and follow the information concerning the product in the current product catalog and in any other materials provided from Parker or its subsidiaries or authorized distributors.

To the extent that Parker or its subsidiaries or authorized distributors provide component or system options based upon data or specifications provided by the user, the user is responsible for determining that such data and specifications are suitable and sufficient for all applications and reasonably foreseeable uses of the components or systems.

Offer of Sale

The items described in this document are hereby offered for sale by Parker Hannifin Corporation, its subsidiaries or its authorized distributors. This offer and its acceptance are governed by the provisions stated in the "Offer of Sale".

© Copyright 2016, Parker Hannifin Corporation, All Rights Reserved

Parker Hannifin Corporation
Chelsea Products Division
Olive Branch, MS 38654 USA

Transmission Make and Model	PTO Appl. Number	Number Forward Speeds	Teeth in PTO Driver
LF05S (MODEL 1415 & 1715 - AFTER JAN. 1999)	HNO-12	5	L29
LF05S (MODEL 1415 & 1715)	HNO-9	5	L30
LF06S (DG Code)	HNO-4	6	L34
LF06S (DH Code)	HNO-6	6	L33
LF06S (DJ Code)	HNO-6	6	L33
LF06S (MODEL 2218 & 2218LP)	HNO-11	6	L34
MG06S (LK Code)	HNO-5	6	L37
MG06S (LL Code)	HNO-8	6	L39

IMPORTANT: See Safety Information in Section 1 of the Chelsea Applications catalog HY25-3000/US.

Transmission PTO Driver & Apertures (Viewed from Rear of Transmission)

L-Left Side R-Right Side B-Bottom Side T-Top Side CS-Countershaft

For transmissions not listed, contact your authorized Chelsea Distributor.

Parker Hannifin Corporation
Chelsea Products Division
Olive Branch, MS 38654 USA

LF06S (DG Code)

LEFT SIDE ONLY

TRANSMISSION GEAR DATA:
L.S. 08-BOLT Opening Gear NON-STANDARD of Centerline
34 Teeth - R.H. HELIX

PITCH LINE TO APERTURE FACE:
2.5370" (64.4400MM)

Caution: Application Approval Required for PTO Output Shaft Speeds Above 2500 RPM

LEFT Side PTO Model	Inter. Torq.	Dir. Rot.	Engine % Fwd.	Engine % Rev.	Filler Block	Adapter Assy.	Stud Kit		Inter. Torq.	Dir. Rot.	Engine % Fwd.	Engine % Rev.	Filler Block	Adapter Assy.	Stud Kit
ONE SPEED - TWO GEAR - MECHANICAL SHIFT															
221XCAHX-*6	250	Eng	33		7-A-032(6)	328962X	Furnished								
221XEAHX-*6	250	Eng	38			328962X	Furnished								
221XLAHX-*6	200	Eng	51			328962X	Furnished								
442XFAHX-*6 (2)	250	Eng	46			328962X	Furnished								
442XHAHX-*6 (3)	250	Eng	53			328962X	Furnished								
442XLAHX-*6 (1)	250	Eng	59			328962X	Furnished								
442XQAHX-*6 (1)	225	Eng	64			328962X	Furnished								
442XRAHX-*6 (1)	225	Eng	74			328962X	Furnished								
442XSAHX-*6 (1)	200	Eng	88			328962X	Furnished								
442XUAHX-*6 (1)	195	Eng	105			328962X	Furnished								
442XWAHX-*6 (1)	175	Eng	123			328962X	Furnished								
442XXAHX-*6 (1)	140	Eng	146			328962X	Furnished								
660XHAHX-*6 (3)	375	Eng	53			328962X	Furnished								
ONE SPEED - TWO GEAR - POWERSHIFT (AIR)															
236XAAHX-*6 (4)	250	Eng	32			328962X	Furnished								
236XDAHX-*6 (1)	250	Eng	48			328962X	Furnished								
236XKAHX-*6 (1)	250	Eng	62			328962X	Furnished								
236XQAHX-*6 (1)	250	Eng	83			328962X	Furnished								
236XUAHX-*6 (1)	225	Eng	95			328962X	Furnished								
ONE SPEED - FORWARD & REVERSE															
340XFAHX-*4 (5)	200	Eng	40	42	7-A-140(6)	328962X	Furnished								
352XSAHX-*6 (1)	140	Eng	89	115		328962X	Furnished								

NOTE: The "XQ" output flange can only be used in a number "3" arrangement due to interference between the housing and mounting flange in the number "6" arrangement.

(1) Input Gear Part No. 5-P-1004
(2) Input Gear Part No. 5-P-1077
(3) Input Gear Part No. 5-P-1364
(4) Input Gear Part No. 5-P-1486
(5) Input Gear Part No. 5-P-581

(6) Filler block furnished with P.T.O.

Parker Hannifin Corporation
Chelsea Products Division
Olive Branch, MS 38654 USA

MG06S (LK Code)

LEFT SIDE ONLY

TRANSMISSION GEAR DATA:
L.S. 08-BOLT Opening Gear NON-STANDARD of Centerline
37 Teeth - R.H. HELIX

PITCH LINE TO APERTURE FACE:
2.5430" (64.5900MM)

Caution: Application Approval Required for PTO Output Shaft Speeds Above 2500 RPM

LEFT Side PTO Model	Inter. Torq.	Dir. Rot.	Engine % Fwd.	Engine % Rev.	Filler Block	Adapter Assy.	Stud Kit		Inter. Torq.	Dir. Rot.	Engine % Fwd.	Engine % Rev.	Filler Block	Adapter Assy.	Stud Kit
ONE SPEED - TWO GEAR - MECHANICAL SHIFT															
442ZFAHX-*6 (2)	250	Eng	57			328993X	Furnished								
442ZHAHX-*6 (3)	250	Eng	66			328993X	Furnished								
442ZLAHX-*6 (1)	250	Eng	73			328993X	Furnished								
442ZQAHX-*6 (1)	225	Eng	79			328993X	Furnished								
442ZRAHX-*6 (1)	225	Eng	91			328993X	Furnished								
660ZHAHX-*6 (3)	375	Eng	66			328993X	Furnished								
ONE SPEED - TWO GEAR - POWERSHIFT (AIR)															
236ZAAHX-*6 (4)	250	Eng	39			328993X	Furnished								
236ZDAHX-*6 (1)	250	Eng	59			328993X	Furnished								
236ZKAHX-*6 (1)	250	Eng	76			328993X	Furnished								
236ZQAHX-*6 (1)	250	Eng	102			328993X	Furnished								
236ZUAHX-*6 (1)	225	Eng	117			328993X	Furnished								
ONE SPEED - FORWARD & REVERSE															
352ZSAHX-*6 (1)	140	Eng	110	143		328993X	Furnished								

NOTE: Shiftable input gear PTO models will not mount on this adapter because sliding input gear will hit the 19-tooth cluster gear. Also 442 S, U, W and X ratios will not mount to the adapter due to gear interference.

(1) Input Gear Part No. 5-P-1004
(2) Input Gear Part No. 5-P-1077
(3) Input Gear Part No. 5-P-1364
(4) Input Gear Part No. 5-P-1486

Parker Hannifin Corporation
Chelsea Products Division
Olive Branch, MS 38654 USA

LF06S (DH Code)
LF06S (DJ Code)

LEFT SIDE ONLY

TRANSMISSION GEAR DATA:
L.S. 08-BOLT Opening Gear NON-STANDARD of Centerline
33 Teeth - R.H. HELIX

PITCH LINE TO APERTURE FACE:
2.6480" (67.2592MM)

Caution: Application Approval Required for PTO Output Shaft Speeds Above 2500 RPM

LEFT Side PTO Model	Inter. Torq.	Dir. Rot.	Engine % Fwd.	Engine % Rev.	Filler Block	Adapter Assy.	Stud Kit		Inter. Torq.	Dir. Rot.	Engine % Fwd.	Engine % Rev.	Filler Block	Adapter Assy.	Stud Kit
ONE SPEED - TWO GEAR - MECHANICAL SHIFT															
221XCAHX-*6	250	Eng	34		7-A-032(6) 329293X(T)	329007X	Furnished								
221XEAHX-*6	250	Eng	39		329293X(T)	329007X	Furnished								
221XLAHX-*6	200	Eng	53		329293X(T)	329007X	Furnished								
442XFAHX-*6 (2)	250	Eng	47		329293X(T)	329007X	Furnished								
442XHAHX-*6 (3)	250	Eng	55		329293X(T)	329007X	Furnished								
442XLAHX-*6 (1)	250	Eng	61		329293X(T)	329007X	Furnished								
442XQAHX-*6 (1)	225	Eng	66		329293X(T)	329007X	Furnished								
442XRAHX-*6 (1)	225	Eng	77		329293X(T)	329007X	Furnished								
442XSAHX-*6 (1)	200	Eng	91		329293X(T)	329007X	Furnished								
442XUAHX-*6 (1)	195	Eng	109		329293X(T)	329007X	Furnished								
442XWAHX-*6 (1)	175	Eng	128		329293X(T)	329007X	Furnished								
442XXAHX-*6 (1)	140	Eng	151		329293X(T)	329007X	Furnished								
660XHAHX-*6 (3)	375	Eng	55		329293X(T)	329007X	Furnished								
ONE SPEED - TWO GEAR - POWERSHIFT (AIR)															
236XAAHX-*6 (4)	250	Eng	33		329293X(T)	329007X	Furnished								
236XDAHX-*6 (1)	250	Eng	49		329293X(T)	329007X	Furnished								
236XKAHX-*6 (1)	250	Eng	64		329293X(T)	329007X	Furnished								
236XQAHX-*6 (1)	250	Eng	86		329293X(T)	329007X	Furnished								
236XUAHX-*6 (1)	225	Eng	98		329293X(T)	329007X	Furnished								
ONE SPEED - FORWARD & REVERSE															
340XFAHX-*4 (5)	200	Eng	41	44	7-A-140(6) 329293X(T)	329007X	Furnished								
352XSAHX-*6 (1)	140	Eng	92	120	329293X(T)	329007X	Furnished								

NOTE: For PTO speeds for DJ transmission, multiply speeds shown by .933.

NOTE: The "XQ" output flange can only be used in the number 3 arrangement due to interference between the housing and mounting flange in the number "6" arrangement.

(1) Input Gear Part No. 5-P-1004
(2) Input Gear Part No. 5-P-1077
(3) Input Gear Part No. 5-P-1364
(4) Input Gear Part No. 5-P-1486
(5) Input Gear Part No. 5-P-581

(6) Filler block furnished with P.T.O. but not required

Parker Hannifin Corporation
Chelsea Products Division
Olive Branch, MS 38654 USA

MG06S (LL Code)

LEFT SIDE ONLY

TRANSMISSION GEAR DATA:
L.S. 08-BOLT Opening Gear NON-STANDARD of Centerline
39 Teeth - R.H. HELIX

PITCH LINE TO APERTURE FACE:
2.3730" (60.2742MM)

Caution: Application Approval Required for PTO Output Shaft Speeds Above 2500 RPM

LEFT Side PTO Model	Inter. Torq.	Dir. Rot.	Engine %		Filler Block	Adapter Assy.	Stud Kit		Inter. Torq.	Dir. Rot.	Engine %		Filler Block	Adapter Assy.	Stud Kit
			Fwd.	Rev.							Fwd.	Rev.			
ONE SPEED - TWO GEAR - MECHANICAL SHIFT															
442ZFAHX-*6 (2)	250	Eng	60		23-P-66-3(T)	328993X	Furnished								
442ZHAHX-*6 (3)	250	Eng	70		23-P-66-3(T)	328993X	Furnished								
442ZLAHX-*6 (1)	250	Eng	77		23-P-66-3(T)	328993X	Furnished								
442ZQAHX-*6 (1)	225	Eng	83		23-P-66-3(T)	328993X	Furnished								
442ZRAHX-*6 (1)	225	Eng	96		23-P-66-3(T)	328993X	Furnished								
660ZHAHX-*6 (3)	375	Eng	70		23-P-66-3(T)	328993X	Furnished								
ONE SPEED - TWO GEAR - POWERSHIFT (AIR)															
236ZAAHX-*6 (4)	250	Eng	41		23-P-66-3(T)	328993X	Furnished								
236ZDAHX-*6 (1)	250	Eng	62		23-P-66-3(T)	328993X	Furnished								
236ZKAHX-*6 (1)	250	Eng	80		23-P-66-3(T)	328993X	Furnished								
ONE SPEED - FORWARD & REVERSE															
352ZSAHX-*6 (1)	140	Eng	116	150	23-P-66-3(T)	328993X	Furnished								

NOTE: Shiftable input gear PTOs along with 442 series in S, U, W, or X ratios will not mount on this adapter. This is due to interference with the cluster gear in the adapter.

(1) Input Gear Part No. 5-P-1004
(2) Input Gear Part No. 5-P-1077
(3) Input Gear Part No. 5-P-1364
(4) Input Gear Part No. 5-P-1486

Parker Hannifin Corporation
Chelsea Products Division
Olive Branch, MS 38654 USA

LF05S (MODEL 1415 & 1715)

LEFT SIDE ONLY

TRANSMISSION GEAR DATA:
L.S. 08-BOLT Opening Gear NON-STANDARD of Centerline
30 Teeth - R.H. HELIX

PITCH LINE TO APERTURE FACE:
2.8730" (72.9700MM)

Caution: Application Approval Required for PTO Output Shaft Speeds Above 2500 RPM

LEFT Side PTO Model	Inter. Torq.	Dir. Rot.	Engine % Fwd.	Engine % Rev.	Filler Block	Adapter Assy.	Stud Kit		Inter. Torq.	Dir. Rot.	Engine % Fwd.	Engine % Rev.	Filler Block	Adapter Assy.	Stud Kit
ONE SPEED - TWO GEAR - MECHANICAL SHIFT															
442XFAHX-*6 (2)	250	Eng	35		329293X(T)	329095X	Furnished								
442XHAHX-*6 (3)	250	Eng	41		329293X(T)	329095X	Furnished								
442XLAHX-*6 (1)	250	Eng	46		329293X(T)	329095X	Furnished								
442XQAHX-*6 (1)	225	Eng	49		329293X(T)	329095X	Furnished								
442XRAHX-*6 (1)	225	Eng	57		329293X(T)	329095X	Furnished								
442XSAHX-*6 (1)	200	Eng	68		329293X(T)	329095X	Furnished								
660XHAHX-*6 (3)	375	Eng	41		329293X(T)	329095X	Furnished								
ONE SPEED - TWO GEAR - POWERSHIFT (AIR)															
236XAAHX-*6 (4)	250	Eng	25		329293X(T)	329095X	Furnished								
236XDAHX-*6 (1)	250	Eng	37		329293X(T)	329095X	Furnished								
236XKAHX-*6 (1)	250	Eng	47		329293X(T)	329095X	Furnished								
236XQAHX-*6 (1)	250	Eng	64		329293X(T)	329095X	Furnished								
236XUAHX-*6 (1)	225	Eng	73		329293X(T)	329095X	Furnished								
ONE SPEED - FORWARD & REVERSE															
340XFAHX-*4 (5)	200	Eng	31	33	7-A-140(6) 329293X	329095X	Furnished								
352XSAHX-*6 (1)	140	Eng	69	89	329293X(T)	329095X	Furnished								

NOTE: Shiftable input gear PTOs along with 442 Series in U, W, or X ratios will not mount on this adapter. This is due to interference with the cluster gear in the adapter.

(1) Input Gear Part No. 5-P-1004
(2) Input Gear Part No. 5-P-1077
(3) Input Gear Part No. 5-P-1364
(4) Input Gear Part No. 5-P-1486
(5) Input Gear Part No. 5-P-581

(6) Filler block furnished with P.T.O. but not required

Parker Hannifin Corporation
Chelsea Products Division
Olive Branch, MS 38654 USA

LF06S (MODEL 2218 & 2218LP)

LEFT SIDE ONLY

TRANSMISSION GEAR DATA:
L.S. 08-BOLT Opening Gear NON-STANDARD of Centerline
34 Teeth - R.H. HELIX

PITCH LINE TO APERTURE FACE:
2.5370" (64.4440MM)

Caution: Application Approval Required for PTO Output Shaft Speeds Above 2500 RPM

LEFT Side PTO Model	Inter. Torq.	Dir. Rot.	Engine % Fwd.	Engine % Rev.	Filler Block	Adapter Assy.	Stud Kit		Inter. Torq.	Dir. Rot.	Engine % Fwd.	Engine % Rev.	Filler Block	Adapter Assy.	Stud Kit
ONE SPEED - TWO GEAR - MECHANICAL SHIFT															
221XCAHX-*6	250	Eng	44		7-A-032(6)	328962X	Furnished								
221XEAHX-*6	250	Eng	51			328962X	Furnished								
221XLAHX-*6	200	Eng	68			328962X	Furnished								
221XPAHX-*6	200	Eng	83			328962X	Furnished								
442XFAHX-*6 (2)	250	Eng	61			328962X	Furnished								
442XHAHX-*6 (3)	250	Eng	71			328962X	Furnished								
442XLAHX-*6 (1)	250	Eng	79			328962X	Furnished								
442XQAHX-*6 (1)	225	Eng	86			328962X	Furnished								
442XRAHX-*6 (1)	225	Eng	99			328962X	Furnished								
442XSAHX-*6 (1)	200	Eng	118			328962X	Furnished								
660XHAHX-*6 (3)	375	Eng	71			328962X	Furnished								
ONE SPEED - TWO GEAR - POWERSHIFT (AIR)															
236XAAHX-*6 (4)	250	Eng	43			328962X	Furnished								
236XDAHX-*6 (1)	250	Eng	64			328962X	Furnished								
236XKAHX-*6 (1)	250	Eng	82			328962X	Furnished								
236XQAHX-*6 (1)	250	Eng	111			328962X	Furnished								
236XUAHX-*6 (1)	225	Eng	127			328962X	Furnished								
ONE SPEED - FORWARD & REVERSE															
340XFAHX-*4 (5)	200	Eng	54	56	7-A-140(6)	328962X	Furnished								
352XSAHX-*6 (1)	140	Eng	119	155		328962X	Furnished								

NOTE: The "XQ" output flange can only be used in a number 3 arrangement due to interference between the housing and mounting flange in the number 6 arrangement.

NOTE: Shiftable input gear PTOs along with 442 Series in U, W, or X ratios will not mount on this adapter. This is due to interference with the cluster gear in the adapter.

(1) Input Gear Part No. 5-P-1004
(2) Input Gear Part No. 5-P-1077
(3) Input Gear Part No. 5-P-1364
(4) Input Gear Part No. 5-P-1486
(5) Input Gear Part No. 5-P-581
(6) Filler block furnished with P.T.O.

Parker Hannifin Corporation
Chelsea Products Division
Olive Branch, MS 38654 USA

LF05S (MODEL 1415 & 1715 - AFTER JAN. 1999)

LEFT SIDE ONLY

TRANSMISSION GEAR DATA:
L.S. 08-BOLT Opening Gear FORWARD of Centerline
29 Teeth - R.H. HELIX

PITCH LINE TO APERTURE FACE:
2.8730" (72.9742MM)

Caution: Application Approval Required for PTO Output Shaft Speeds Above 2500 RPM

LEFT Side PTO Model	Inter. Torq.	Dir. Rot.	Engine % Fwd.	Engine % Rev.	Filler Block	Adapter Assy.	Stud Kit		Inter. Torq.	Dir. Rot.	Engine % Fwd.	Engine % Rev.	Filler Block	Adapter Assy.	Stud Kit
ONE SPEED - TWO GEAR - MECHANICAL SHIFT															
442XFAHX-*6 (2)	250	Eng	37			329095X	Furnished								
442XHAHX-*6 (3)	250	Eng	43			329095X	Furnished								
442XLAHX-*6 (1)	250	Eng	48			329095X	Furnished								
442XQAHX-*6 (1)	225	Eng	51			329095X	Furnished								
442XRAHX-*6 (1)	225	Eng	59			329095X	Furnished								
442XSAHX-*6 (1)	200	Eng	71			329095X	Furnished								
660XHAHX-*6 (3)	375	Eng	43			329095X	Furnished								
ONE SPEED - TWO GEAR - POWERSHIFT (AIR)															
236XAAHX-*6 (4)	250	Eng	26			329095X	Furnished								
236XDAHX-*6 (1)	250	Eng	39			329095X	Furnished								
236XKAHX-*6 (1)	250	Eng	49			329095X	Furnished								
236XQAHX-*6 (1)	250	Eng	66			329095X	Furnished								
236XUAHX-*6 (1)	225	Eng	76			329095X	Furnished								
ONE SPEED - FORWARD & REVERSE															
340XFAHX-*4 (5)	200	Eng	32	34	7-A-140(6)	329095X	Furnished								
352XSAHX-*6 (1)	140	Eng	71	92		329095X	Furnished								

NOTE: Shiftable input gear PTOs along with 442 Series in U, W, or X ratios will not mount on this adapter. This is due to interference with the cluster gear in the adapter.

(1) Input Gear Part No. 5-P-1004
(2) Input Gear Part No. 5-P-1077
(3) Input Gear Part No. 5-P-1364
(4) Input Gear Part No. 5-P-1486
(5) Input Gear Part No. 5-P-581

(6) Filler block furnished with P.T.O.

Parker Hannifin Corporation
Chelsea Products Division
Olive Branch, MS 38654 USA

ISUZU



Parker | Chelsea

ENGINEERING YOUR SUCCESS.

Isuzu

⚠ WARNING — User Responsibility

FAILURE OR IMPROPER SELECTION OR IMPROPER USE OF THE PRODUCTS DESCRIBED HEREIN OR RELATED ITEMS CAN CAUSE DEATH, PERSONAL INJURY AND PROPERTY DAMAGE.

This document and other information from Parker-Hannifin Corporation, its subsidiaries and authorized distributors provide product or system options for further investigation by users having technical expertise.

The user, through its own analysis and testing, is solely responsible for making the final selection of the system and components and assuring that all performance, endurance, maintenance, safety and warning requirements of the application are met. The user must analyze all aspects of the application, follow applicable industry standards, and follow the information concerning the product in the current product catalog and in any other materials provided from Parker or its subsidiaries or authorized distributors.

To the extent that Parker or its subsidiaries or authorized distributors provide component or system options based upon data or specifications provided by the user, the user is responsible for determining that such data and specifications are suitable and sufficient for all applications and reasonably foreseeable uses of the components or systems.

Offer of Sale

The items described in this document are hereby offered for sale by Parker Hannifin Corporation, its subsidiaries or its authorized distributors. This offer and its acceptance are governed by the provisions stated in the "Offer of Sale".

© Copyright 2016, Parker Hannifin Corporation, All Rights Reserved

Parker Hannifin Corporation
Chelsea Products Division
Olive Branch, MS 38654 USA

Transmission Make and Model	PTO Appl. Number	Number Forward Speeds	Teeth in PTO Driver
450-43LE (Case Serial # 8D3394 and Later)	IZU-12	4	L58
A450-43L	IZU-12	5	L58
A450-43LE	IZU-12	4	L58
MBP-6P	IZU-13	6	L28
MLD-6C	IZU-6	6	L33
MLD-6E	IZU-5	6	L34
MLD-6F	IZU-10	6	L35
MLD-6Q	IZU-11	6	L36
MLH-5G	IZU-3	5	L40
MZZ-6U (Replaced the MSA5D beginning in 2002)	IZU-17	6	L37

IMPORTANT: See Safety Information in Section I of the Chelsea Applications catalog HY25-3000/US.

Transmission PTO Driver & Apertures (Viewed from Rear of Transmission)

L-Left Side R-Right Side B-Bottom Side T-Top Side CS-Countershaft

For transmissions not listed, contact your authorized Chelsea Distributor.

Parker Hannifin Corporation
Chelsea Products Division
Olive Branch, MS 38654 USA

MLH-5G

LEFT SIDE ONLY

TRANSMISSION GEAR DATA:
L.S. 08-BOLT Opening Gear NON-STANDARD of Centerline
40 Teeth - R.H. HELIX

PITCH LINE TO APERTURE FACE:
2.3040" (58.5200MM)

Caution: Application Approval Required for PTO Output Shaft Speeds Above 2500 RPM

LEFT Side PTO Model	Inter. Torq.	Dir. Rot.	Engine % Fwd.	Engine % Rev.	Filler Block	Adapter Assy.	Stud Kit		Inter. Torq.	Dir. Rot.	Engine % Fwd.	Engine % Rev.	Filler Block	Adapter Assy.	Stud Kit
ONE SPEED - TWO GEAR - MECHANICAL SHIFT															
221XCAHX-*5	250	Eng	43		7-A-032(P)(6)	328983X	Furnished								
221XEAHX-*5	250	Eng	50			328983X	Furnished								
221XLAHX-*5	200	Eng	67			328983X	Furnished								
221XPAHX-*5	200	Eng	81			328983X	Furnished								
442XFAHX-*5 (2)	250	Eng	60			328983X	Furnished								
442XHAHX-*5 (3)	250	Eng	70			328983X	Furnished								
442XLAHX-*5 (1)	250	Eng	78			328983X	Furnished								
442XQAHX-*5 (1)	225	Eng	84			328983X	Furnished								
442XRAHX-*5 (1)	225	Eng	97			328983X	Furnished								
442XSAHX-*5 (1)	200	Eng	115			328983X	Furnished								
442XUAHX-*5 (1)	195	Eng	137			328983X	Furnished								
442XWAHX-*5 (1)	175	Eng	162			328983X	Furnished								
442XXAHX-*5 (1)	140	Eng	191			328983X	Furnished								
660XHAHX-*5 (3)	375	Eng	70			328983X	Furnished								
ONE SPEED - TWO GEAR - POWERSHIFT (AIR)															
236XAAHX-*5 (4)	250	Eng	42			328983X	Furnished								
236XDAHX-*5 (1)	250	Eng	63			328983X	Furnished								
236XKAHX-*5 (1)	250	Eng	81			328983X	Furnished								
236XQAHX-*5 (1)	250	Eng	109			328983X	Furnished								
236XUAHX-*5 (1)	225	Eng	124			328983X	Furnished								
ONE SPEED - FORWARD & REVERSE															
340XFAHX-*5 (5)	200	Eng	52	55	7-A-140(P)(6)	328983X	Furnished								
352XSAHX-*5 (1)	140	Eng	117	151		328983X	Furnished								

(1) Input Gear Part No. 5-P-1004
(2) Input Gear Part No. 5-P-1077
(3) Input Gear Part No. 5-P-1364
(4) Input Gear Part No. 5-P-1486
(5) Input Gear Part No. 5-P-581

(6) Filler block furnished with P.T.O.

Parker Hannifin Corporation
Chelsea Products Division
Olive Branch, MS 38654 USA

MLD-6E

LEFT SIDE ONLY

TRANSMISSION GEAR DATA:
L.S. 06-BOLT Opening Gear FORWARD of Centerline
34 Teeth - R.H. HELIX

PITCH LINE TO APERTURE FACE:
3.0650" (77.8510MM)

Caution: Application Approval Required for PTO Output Shaft Speeds Above 2500 RPM

LEFT Side PTO Model	Inter. Torq.	Dir. Rot.	Engine % Fwd.	Engine % Rev.	Filler Block	Adapter Assy.	Stud Kit		Inter. Torq.	Dir. Rot.	Engine % Fwd.	Engine % Rev.	Filler Block	Adapter Assy.	Stud Kit
ONE SPEED - TWO GEAR - MECHANICAL SHIFT															
221XCAHX-*6	250	Eng	35		7-A-032(P)(6) 23-P-65-1(T)	328985X	Furnished								
221XEAHX-*6	250	Eng	40		23-P-65-1(T)	328985X	Furnished								
221XLAHX-*6	200	Eng	54		23-P-65-1(T)	328985X	Furnished								
221XPAHX-*6	200	Eng	66		23-P-65-1(T)	328985X	Furnished								
442XFAHX-*6 (2)	250	Eng	49		23-P-65-1(T)	328985X	Furnished								
442XHAHX-*6 (3)	250	Eng	57		23-P-65-1(T)	328985X	Furnished								
442XLAHX-*6 (1)	250	Eng	63		23-P-65-1(T)	328985X	Furnished								
442XQAHX-*6 (1)	225	Eng	68		23-P-65-1(T)	328985X	Furnished								
442XRAHX-*6 (1)	225	Eng	79		23-P-65-1(T)	328985X	Furnished								
442XSAHX-*6 (1)	200	Eng	94		23-P-65-1(T)	328985X	Furnished								
442XUAHX-*6 (1)	195	Eng	112		23-P-65-1(T)	328985X	Furnished								
442XWAHX-*6 (1)	175	Eng	131		23-P-65-1(T)	328985X	Furnished								
442XXAHX-*6 (1)	140	Eng	155		23-P-65-1(T)	328985X	Furnished								
660XHAHX-*6 (3)	375	Eng	57		23-P-65-1(T)	328985X	Furnished								
ONE SPEED - TWO GEAR - POWERSHIFT (AIR)															
236XAAHX-*6 (4)	250	Eng	34		23-P-65-1(T)	328985X	Furnished								
236XDAHX-*6 (1)	250	Eng	51		23-P-65-1(T)	328985X	Furnished								
236XKAHX-*6 (1)	250	Eng	66		23-P-65-1(T)	328985X	Furnished								
236XQAHX-*6 (1)	250	Eng	88		23-P-65-1(T)	328985X	Furnished								
236XUAHX-*6 (1)	225	Eng	101		23-P-65-1(T)	328985X	Furnished								
ONE SPEED - FORWARD & REVERSE															
340XFAHX-*4 (5)	200	Eng	43	45	7-A-140(P)(6) 23-P-65-1(T)	328985X	Furnished								
352XSAHX-*6 (1)	140	Eng	95	123	23-P-65-1(T)	328985X	Furnished								

NOTE: Adapter 328985X is required to mount a PTO on this transmission, and may be mounted with the SAE 6-Bolt pad in either direction.

(1) Input Gear Part No. 5-P-1004
(2) Input Gear Part No. 5-P-1077
(3) Input Gear Part No. 5-P-1364
(4) Input Gear Part No. 5-P-1486
(5) Input Gear Part No. 5-P-581

(6) Filler block furnished with P.T.O.

Parker Hannifin Corporation
Chelsea Products Division
Olive Branch, MS 38654 USA

MLD-6C

LEFT SIDE ONLY

TRANSMISSION GEAR DATA:
L.S. 06-BOLT Opening Gear FORWARD of Centerline
33 Teeth - R.H. HELIX

PITCH LINE TO APERTURE FACE:
3.1412" (79.7864MM)

Caution: Application Approval Required for PTO Output Shaft Speeds Above 2500 RPM

LEFT Side PTO Model	Inter. Torq.	Dir. Rot.	Engine % Fwd.	Engine % Rev.	Filler Block	Adapter Assy.	Stud Kit		Inter. Torq.	Dir. Rot.	Engine % Fwd.	Engine % Rev.	Filler Block	Adapter Assy.	Stud Kit
ONE SPEED - TWO GEAR - MECHANICAL SHIFT															
221XCAHX-*6	250	Eng	36		7-A-032(P)(6)	328985X	Furnished								
221XEAHX-*6	250	Eng	42			328985X	Furnished								
221XLAHX-*6	200	Eng	56			328985X	Furnished								
221XPAHX-*6	200	Eng	68			328985X	Furnished								
442XFAHX-*6 (2)	250	Eng	51			328985X	Furnished								
442XHAHX-*6 (3)	250	Eng	59			328985X	Furnished								
442XLAHX-*6 (1)	250	Eng	66			328985X	Furnished								
442XQAHX-*6 (1)	225	Eng	71			328985X	Furnished								
442XRAHX-*6 (1)	225	Eng	82			328985X	Furnished								
442XSAHX-*6 (1)	200	Eng	97			328985X	Furnished								
442XUAHX-*6 (1)	195	Eng	116			328985X	Furnished								
442XWAHX-*6 (1)	175	Eng	136			328985X	Furnished								
442XXAHX-*6 (1)	140	Eng	161			328985X	Furnished								
660XHAHX-*6 (3)	375	Eng	59			328985X	Furnished								
ONE SPEED - TWO GEAR - POWERSHIFT (AIR)															
236XAAHX-*6 (4)	250	Eng	35			328985X	Furnished								
236XDAHX-*6 (1)	250	Eng	53			328985X	Furnished								
236XKAHX-*6 (1)	250	Eng	68			328985X	Furnished								
236XQAHX-*6 (1)	250	Eng	91			328985X	Furnished								
236XUAHX-*6 (1)	225	Eng	105			328985X	Furnished								
ONE SPEED - FORWARD & REVERSE															
340XFAHX-*4 (5)	200	Eng	44	46	7-A-140(P)(6)	328985X	Furnished								
352XSAHX-*6 (1)	140	Eng	99	128		328985X	Furnished								

NOTE: Adapter 328985X is required to mount a PTO on this transmission, and may be mounted with the SAE 6-Bolt pad in either direction.

(1) Input Gear Part No. 5-P-1004
(2) Input Gear Part No. 5-P-1077
(3) Input Gear Part No. 5-P-1364
(4) Input Gear Part No. 5-P-1486
(5) Input Gear Part No. 5-P-581

(6) Filler block furnished with P.T.O.

Parker Hannifin Corporation
Chelsea Products Division
Olive Branch, MS 38654 USA

MLD-6F

LEFT SIDE ONLY

TRANSMISSION GEAR DATA:
L.S. 06-BOLT Opening Gear FORWARD of Centerline
35 Teeth - R.H. HELIX

PITCH LINE TO APERTURE FACE:
2.9900" (75.9460MM)

Caution: Application Approval Required for PTO Output Shaft Speeds Above 2500 RPM

LEFT Side PTO Model	Inter. Torq.	Dir. Rot.	Engine % Fwd.	Engine % Rev.	Filler Block	Adapter Assy.	Stud Kit		Inter. Torq.	Dir. Rot.	Engine % Fwd.	Engine % Rev.	Filler Block	Adapter Assy.	Stud Kit
ONE SPEED - TWO GEAR - MECHANICAL SHIFT															
221XCAHX-*6	250	Eng	36		7-A-032(P)(6) 23-P-65-2(T)	328985X	Furnished								
221XEAHX-*6	250	Eng	42		23-P-65-2(T)	328985X	Furnished								
221XLAHX-*6	200	Eng	56		23-P-65-2(T)	328985X	Furnished								
221XPAHX-*6	200	Eng	68		23-P-65-2(T)	328985X	Furnished								
442XFAHX-*6 (2)	250	Eng	50		23-P-65-2(T)	328985X	Furnished								
442XHAHX-*6 (3)	250	Eng	58		23-P-65-2(T)	328985X	Furnished								
442XLAHX-*6 (1)	250	Eng	65		23-P-65-2(T)	328985X	Furnished								
442XQAHX-*6 (1)	225	Eng	70		23-P-65-2(T)	328985X	Furnished								
442XRAHX-*6 (1)	225	Eng	81		23-P-65-2(T)	328985X	Furnished								
442XSAHX-*6 (1)	200	Eng	96		23-P-65-2(T)	328985X	Furnished								
442XUAHX-*6 (1)	195	Eng	115		23-P-65-2(T)	328985X	Furnished								
442XWAHX-*6 (1)	175	Eng	135		23-P-65-2(T)	328985X	Furnished								
442XXAHX-*6 (1)	140	Eng	160		23-P-65-2(T)	328985X	Furnished								
660XHAHX-*6 (3)	375	Eng	58		23-P-65-2(T)	328985X	Furnished								
ONE SPEED - TWO GEAR - POWERSHIFT (AIR)															
236XAAHX-*6 (4)	250	Eng	35		23-P-65-2(T)	328985X	Furnished								
236XDAHX-*6 (1)	250	Eng	53		23-P-65-2(T)	328985X	Furnished								
236XKAHX-*6 (1)	250	Eng	67		23-P-65-2(T)	328985X	Furnished								
236XQAHX-*6 (1)	250	Eng	91		23-P-65-2(T)	328985X	Furnished								
236XUAHX-*6 (1)	225	Eng	104		23-P-65-2(T)	328985X	Furnished								
ONE SPEED - FORWARD & REVERSE															
340XFAHX-*4 (5)	200	Eng	44	46	7-A-140(P)(6) 23-P-62-2(T)	328985X	Furnished								
352XSAHX-*6 (1)	140	Eng	98	126	23-P-65-2(T)	328985X	Furnished								

NOTE: Adapter 328985X is required to mount a PTO on this transmission, and may be mounted with the 6-Bolt pad in either direction.

(1) Input Gear Part No. 5-P-1004
(2) Input Gear Part No. 5-P-1077
(3) Input Gear Part No. 5-P-1364
(4) Input Gear Part No. 5-P-1486
(5) Input Gear Part No. 5-P-581

(6) Filler block furnished with P.T.O.

Parker Hannifin Corporation
Chelsea Products Division
Olive Branch, MS 38654 USA

MLD-6Q

LEFT SIDE ONLY

TRANSMISSION GEAR DATA:
L.S. 08-BOLT Opening Gear NON-STANDARD of Centerline
36 Teeth - R.H. HELIX

PITCH LINE TO APERTURE FACE:
2.7150" (68.9610MM)

Caution: Application Approval Required for PTO Output Shaft Speeds Above 2500 RPM

LEFT Side PTO Model	Inter. Torq.	Dir. Rot.	Engine % Fwd.	Engine % Rev.	Filler Block	Adapter Assy.	Stud Kit		Inter. Torq.	Dir. Rot.	Engine % Fwd.	Engine % Rev.	Filler Block	Adapter Assy.	Stud Kit
ONE SPEED - TWO GEAR - MECHANICAL SHIFT															
221XCAHX-*6	250	Eng	45		7-A-032(P)(6) 329308X(T)	328985X	328170-202X								
221XEAHX-*6	250	Eng	52		329308X(T)	328985X	328170-202X								
221XLAHX-*6	200	Eng	70		329308X(T)	328985X	328170-202X								
221XPAHX-*6	200	Eng	85		329308X(T)	328985X	328170-202X								
442XFAHX-*6 (2)	250	Eng	63		329308X(T)	328985X	328170-202X								
442XHAHX-*6 (3)	250	Eng	73		329308X(T)	328985X	328170-202X								
442XLAHX-*6 (1)	250	Eng	81		329308X(T)	328985X	328170-202X								
442XQAHX-*6 (1)	225	Eng	88		329308X(T)	328985X	328170-202X								
442XRAHX-*6 (1)	225	Eng	101		329308X(T)	328985X	328170-202X								
442XSAHX-*6 (1)	200	Eng	121		329308X(T)	328985X	328170-202X								
442XUAHX-*6 (1)	195	Eng	144		329308X(T)	328985X	328170-202X								
442XWAHX-*6 (1)	175	Eng	169		329308X(T)	328985X	328170-202X								
442XXAHX-*6 (1)	140	Eng	200		329308X(T)	328985X	328170-202X								
660XHAHX-*6 (3)	375	Eng	73		329308X(T)	328985X	328170-202X								
ONE SPEED - TWO GEAR - POWERSHIFT (AIR)															
236XAAHX-*6 (4)	250	Eng	44		329308X(T)	328985X	328170-202X								
236XDAHX-*6 (1)	250	Eng	66		329308X(T)	328985X	328170-202X								
236XKAHX-*6 (1)	250	Eng	84		329308X(T)	328985X	328170-202X								
236XQAHX-*6 (1)	250	Eng	113		329308X(T)	328985X	328170-202X								
236XUAHX-*6 (1)	225	Eng	130		329308X(T)	328985X	328170-202X								
ONE SPEED - FORWARD & REVERSE															
340XFAHX-*4 (5)	200	Eng	55	58	7-A-140(P)(6) 329308X(T)	328985X	328170-202X								
352XSAHX-*6 (1)	140	Eng	122	158	329308X(T)	328985X	328170-202X								

NOTE: Adapter 328985X is required to a PTO on this transmission, and may be mounted with the SAE 6-Bolt pad in either direction.

(1) Input Gear Part No. 5-P-1004
(2) Input Gear Part No. 5-P-1077
(3) Input Gear Part No. 5-P-1364
(4) Input Gear Part No. 5-P-1486
(5) Input Gear Part No. 5-P-581

(6) Filler block furnished with P.T.O.

Parker Hannifin Corporation
Chelsea Products Division
Olive Branch, MS 38654 USA

450-43LE (Case Serial # 8D3394 and Later)
A450-43L

LEFT SIDE ONLY

TRANSMISSION GEAR DATA:
L.S. 06-BOLT Opening Gear FORWARD of Centerline
58 Teeth - SPUR

PITCH LINE TO APERTURE FACE:
1.0880" (27.6352MM)

Caution: Application Approval Required for PTO Output Shaft Speeds Above 2500 RPM

LEFT Side PTO Model	Inter. Torq.	Dir. Rot.	Engine %		Filler Block	Adapter Assy.	Stud Kit		Inter. Torq.	Dir. Rot.	Engine %		Filler Block	Adapter Assy.	Stud Kit
			Fwd.	Rev.							Fwd.	Rev.			
ONE SPEED - TWO GEAR - POWERSHIFT (HYDRAULIC)															
270AAKUP-*5 (1)	210	Eng	55				Furnished								
270ABKUP-*5 (2)	163	Eng	71				Furnished								
270ADKUP-*5 (3)	139	Eng	82				Furnished								
270AKKUP-*5 (4)	104	Eng	111				Furnished								
270AQKUP-*5 (5)	78	Eng	148				Furnished								

NOTE: When ordering the 270 "A", the hose kit 329246X and metric stud kit 328170-205X are furnished with the PTO. The hose kit and metric stud kit are required for completing the 270A Series installation. The 329246X kit supplies hoses for the low pressure lube, high pressure oil, and drain back oil.

NOTE: The torque ratings shown for the 270 Series are based on the maximum allowable torque capacity of the PTO drive gear in the transmission.

NOTE: The PTOs shown on this application page will fit Isuzu NQR model trucks with serial number X7901741 and later only.

NOTE: The PTOs shown on this application page will fit Isuzu NPR model trucks with wheel bases of 109" or 132" and a serial number of X7006763 and later.

NOTE: The PTOs shown on this application page will also fit the same NPR model trucks with wheel bases of 150" and 176" after August of 1998 and serial number of X7006763 and later.

NOTE: The serial number is the last eight digits found on the VIN plate which is located in the cab behind the driver.

(1) Input Gear Part No. 5-P-1353
(2) Input Gear Part No. 5-P-1354
(3) Input Gear Part No. 5-P-1355
(4) Input Gear Part No. 5-P-1356
(5) Input Gear Part No. 5-P-1359

Parker Hannifin Corporation
Chelsea Products Division
Olive Branch, MS 38654 USA

MBP-6P

LEFT SIDE ONLY

TRANSMISSION GEAR DATA:
L.S. 08-BOLT Opening Gear CENTER of Centerline
28 Teeth - R.H. HELIX

PITCH LINE TO APERTURE FACE:
1.8560" (47.1424MM)

Caution: Application Approval Required for PTO Output Shaft Speeds Above 2500 RPM

LEFT Side PTO Model	Inter. Torq.	Dir. Rot.	Engine % Fwd.	Engine % Rev.	Filler Block	Adapter Assy.	Stud Kit		Inter. Torq.	Dir. Rot.	Engine % Fwd.	Engine % Rev.	Filler Block	Adapter Assy.	Stud Kit
ONE SPEED - TWO GEAR - MECHANICAL SHIFT															
447XQEVX-*6 (1)	225	Eng	36			329244X	Furnished								
447XREVX-*6 (2)	225	Eng	42			329244X	Furnished								
447XSJXX-*6 (3)	200	Eng	50			329244X	Furnished								
447XUJXX-*6 (4)	195	Eng	60			329244X	Furnished								

NOTE: This is a non-standard 8 bolt opening. The 329244X adapter converts the opening to a standard SAE 6 bolt opening. The gears in the adapter are 43-P-162 and 43-P-163.

NOTE: The old 447XSEVX with a 5-P-1206, the 447XUEVX with a 5-P-1207, and the 447XWEVX with a 5-P-1208, will not mount on this transmission due to interference between the hub of the PTO input gear and the outside diameter of the adapter gear 43-P-163.

(1) Input Gear Part No. 5-P-1205
(2) Input Gear Part No. 5-P-1219
(3) Input Gear Part No. 5-P-1270
(4) Input Gear Part No. 5-P-1271

Isuzu

Parker Hannifin Corporation
Chelsea Products Division
Olive Branch, MS 38654 USA

MZZ-6U (Replaced the MSA5D beginning in 2002)

LEFT SIDE ONLY

TRANSMISSION GEAR DATA:
L.S. 08-BOLT Opening Gear FORWARD of Centerline
37 Teeth - R.H. HELIX

PITCH LINE TO APERTURE FACE:
1.2850" (32.6390MM)

Caution: Application Approval Required for PTO Output Shaft Speeds Above 2500 RPM

LEFT Side PTO Model	Inter. Torq.	Dir. Rot.	Engine % Fwd.	Engine % Rev.	Filler Block	Adapter Assy.	Stud Kit		Inter. Torq.	Dir. Rot.	Engine % Fwd.	Engine % Rev.	Filler Block	Adapter Assy.	Stud Kit
ONE SPEED - TWO GEAR - MECHANICAL SHIFT															
442XFAHX-*6 (2)	250	Eng	42			328960-3X	Furnished								
442XHAHX-*6 (3)	250	Eng	49			328960-3X	Furnished								
442XLAHX-*6 (1)	250	Eng	54			328960-3X	Furnished								
442XQAHX-*6 (1)	225	Eng	58			328960-3X	Furnished								
442XRAHX-*6 (1)	225	Eng	68			328960-3X	Furnished								
442XSAHX-*6 (1)	200	Eng	80			328960-3X	Furnished								
442XUAHX-*6 (1)	195	Eng	96			328960-3X	Furnished								
442XWAHX-*6 (1)	175	Eng	113			328960-3X	Furnished								
442XXAHX-*6 (1)	140	Eng	127			328960-3X	Furnished								
660XHAHX-*6 (3)	375	Eng	49			328960-3X	Furnished								
ONE SPEED - FORWARD & REVERSE															
352XSAHX-*6 (1)	140	Eng	81	105		328960-3X	Furnished								

(1) Input Gear Part No. 5-P-1004
(2) Input Gear Part No. 5-P-1077
(3) Input Gear Part No. 5-P-1364

Parker Hannifin Corporation
Chelsea Products Division
Olive Branch, MS 38654 USA

NOTES



Isuzu

Parker Hannifin Corporation
Chelsea Products Division
Olive Branch, MS 38654 USA

MACK



Parker | Chelsea

ENGINEERING YOUR SUCCESS.

Mack

⚠ WARNING — User Responsibility

FAILURE OR IMPROPER SELECTION OR IMPROPER USE OF THE PRODUCTS DESCRIBED HEREIN OR RELATED ITEMS CAN CAUSE DEATH, PERSONAL INJURY AND PROPERTY DAMAGE.

This document and other information from Parker-Hannifin Corporation, its subsidiaries and authorized distributors provide product or system options for further investigation by users having technical expertise.

The user, through its own analysis and testing, is solely responsible for making the final selection of the system and components and assuring that all performance, endurance, maintenance, safety and warning requirements of the application are met. The user must analyze all aspects of the application, follow applicable industry standards, and follow the information concerning the product in the current product catalog and in any other materials provided from Parker or its subsidiaries or authorized distributors.

To the extent that Parker or its subsidiaries or authorized distributors provide component or system options based upon data or specifications provided by the user, the user is responsible for determining that such data and specifications are suitable and sufficient for all applications and reasonably foreseeable uses of the components or systems.

Offer of Sale

The items described in this document are hereby offered for sale by Parker Hannifin Corporation, its subsidiaries or its authorized distributors. This offer and its acceptance are governed by the provisions stated in the "Offer of Sale".

© Copyright 2016, Parker Hannifin Corporation, All Rights Reserved

Parker Hannifin Corporation
Chelsea Products Division
Olive Branch, MS 38654 USA

Transmission Make and Model	PTO Appl. Number	Number Forward Speeds	Teeth in PTO Driver
D107	MAK-18	10	L37-R37
D1070	MAK-19	10	L37-R37
DX1070	MAK-16	6	L34-R34
DX1071	MAK-16	6	L34-R34
DX1078	MAK-16	6	L34-R34
DX10780	MAK-16	6	L34-R34
DX10781	MAK-16	6	L34-R34
G1070	MAK-19	7	L37-R37
QL7220	MAK-17	20	L38-R38
T107	MAK-18	6	L37-R37
T1070	MAK-19	12	L37-R37
T1070-B	MAK-19	12	L37-R37
T2050	MAK-25	5	L54-R54
T2050-C	MAK-29	5	L48-R48
T2060	MAK-25	6	L54-R54
T2060-A	MAK-30	6	L40-R40
T2060-C	MAK-29	6	L48-R48
T2070	MAK-25	7	L54-R54
T2070-A (Front Box)	MAK-25	7	L54-R54
T2070-A (Rear Box)	MAK-26	7	L49-R49
T2070-B (Front Box)	MAK-25	7	L54-R54
T2070-B (Rear Box)	MAK-26	7	L49-R49
T2070-C	MAK-29	7	L48-R48
T2070-D (Front Box)	MAK-29	7	L48-R48
T2070-D (Rear Box)	MAK-26	7	L49-R49
T2070-F	MAK-25	7	L54-R54
T2080	MAK-25	8	L54-R54
T2080-B (Front Box)	MAK-25	8	L54-R54
T2080-B (Rear Box)	MAK-26	8	L49-R49
T2080-C	MAK-29	8	L48-R48
T2080-D (Front Box)	MAK-29	8	L48-R48
T2080-D (Rear Box)	MAK-26	8	L49-R49
T2090	MAK-23	9	L54-R54
T2090-L	MAK-23	9	L54-R54
T2100	MAK-24	10	L54-R54
T2110-B (FRONT BOX FOR T2110B)	MAK-24	11	L54-R54

IMPORTANT: See Safety Information in Section I of the Chelsea Applications catalog HY25-3000/US.

Transmission PTO Driver & Apertures (Viewed from Rear of Transmission)

L-Left Side R-Right Side B-Bottom Side T-Top Side CS-Countershaft

For transmissions not listed, contact your authorized Chelsea Distributor.

Parker Hannifin Corporation
Chelsea Products Division
Olive Branch, MS 38654 USA

MACK TRANSMISSION INDEX

Transmission Make and Model	PTO Appl. Number	Number Forward Speeds	Teeth in PTO Driver
T2110-B (REAR BOX FOR T2110B)	MAK-31	11	L49-R49
T2130 (Front Box)	MAK-23	13	L54-R54
T2130 (Rear Box)	MAK-28	13	L49-R49
T2130-B (Front Box)	MAK-23	13	L54-R54
T2130-B (Rear Box)	MAK-28	12	L49-R49
T2180 (Front Box)	MAK-23	18	L54-R54
T2180 (Rear Box)	MAK-27	18	L49-R49
T2180-B (Front Box)	MAK-23	18	L54-R54
T2180-B (Rear Box)	MAK-27	18	L49-R49
T305	MAK-25	5	L54-R54
T306	MAK-25	6	L54-R54
T306G	MAK-30	6	L40-R40
T307	MAK-25	7	L54-R54
T307M (Front Box)	MAK-25	7	L54-R54
T307M (Rear Box)	MAK-26	7	L49-R49
T308	MAK-25	8	L54-R54
T308M (Front Box)	MAK-25	8	L54-R54
T308M (Rear Box)	MAK-26	8	L49-R49
T309	MAK-23	9	L54-R54
T309L	MAK-23	9	L54-R54
T309LR	MAK-23	9	L54-R54
T310 (T310 is a standard 10 speed with no rear box)	MAK-32	10	L53-R53
T310-M (Front Box)	MAK-32	13	L53-R53
T310-M (Rear Box)	MAK-27	13	L49-R49
T310ME (Front box, same as T-310M, output flange extended for rear mount PTO)	MAK-32	10	L53-R53
T310ME (Rear box, same as T310M, output flange extended for rear mount PTO)	MAK-27	10	L49-R49
T310-MLR (Front Box)	MAK-23	13	L54-R54
T310-MLR (Rear Box)	MAK-27	13	L49-R49
T313H (Front Box)	MAK-23	13	L54-R54
T313H (Rear Box)	MAK-28	13	L49-R49
T313L (Front Box)	MAK-23	13	L54-R54
T313L (Rear Box)	MAK-28	13	L49-R49
T313L21 (Front Box)	MAK-23	13	L54-R54
T313L21 (Rear Box)	MAK-28	13	L49-R49
T313LR (Front Box)	MAK-23	13	L54-R54
T313LR (Rear Box)	MAK-28	13	L49-R49

IMPORTANT: See Safety Information in Section 1 of the Chelsea Applications catalog HY25-3000/US.

Transmission PTO Driver & Apertures (Viewed from Rear of Transmission)

L-Left Side R-Right Side B-Bottom Side T-Top Side CS-Countershaft

For transmissions not listed, contact your authorized Chelsea Distributor.

Parker Hannifin Corporation
Chelsea Products Division
Olive Branch, MS 38654 USA

Transmission Make and Model	PTO Appl. Number	Number Forward Speeds	Teeth in PTO Driver
T313LR21 (Front Box)	MAK-23	13	L54-R54
T313LR21 (Rear Box)	MAK-28	13	L49-R49
T318 (Front Box)	MAK-23	18	L54-R54
T318 (Rear Box)	MAK-27	18	L49-R49
T318L (Front Box)	MAK-23	18	L54-R54
T318L (Rear Box)	MAK-27	18	L49-R49
T318L21 (Front Box)	MAK-23	18	L54-R54
T318L21 (Rear Box)	MAK-27	18	L49-R49
T318LR (Front Box)	MAK-23	18	L54-R54
T318LR (Rear Box)	MAK-27	18	L49-R49
T318LR21 (Front Box)	MAK-23	18	L54-R54
T318LR21 (Rear Box)	MAK-27	18	L49-R49
TM308	MAK-33	8	L54-R54
TM308M (Front box)	MAK-23	8	L54-R54
TM308M (Rear Box)	MAK-26	8	L49-R49
TM309	MAK-33	9	L54-R54
TM309M (Front Box)	MAK-23	9	L54-R54
TM309M (Rear Box)	MAK-26	9	L49-R49
TMD12AD (MDrive)	MAK-34	12	CS
TMD12AO (MDrive)	MAK-35	12	CS
TR720-7220	MAK-17	5	L38-R38
TRD7250	MAK-17	10	L38-R38
TRDL107	MAK-18	10	L37-R37
TRDL1070	MAK-19	10	L37-R37
TRDL720-7220	MAK-17	10	L38-R38
TRDLG1070	MAK-19	7	L37-R37
TRDX720-7220	MAK-17	10	L38-R38
TRDXL107	MAK-16	6	L34-R34
TRDXL1070	MAK-16	6	L34-R34
TRDXL1071	MAK-16	6	L34-R34
TRDXL1078	MAK-16	6	L34-R34
TRDXL10780	MAK-16	6	L34-R34
TRDXL10781	MAK-16	6	L34-R34
TRDXT720-7220	MAK-17	10	L38-R38
TRL107	MAK-22	5	L34-R34
TRL1076	MAK-16	5	L34-R34

IMPORTANT: See Safety Information in Section I of the Chelsea Applications catalog HY25-3000/US.

Transmission PTO Driver & Apertures (Viewed from Rear of Transmission)

L-Left Side R-Right Side B-Bottom Side T-Top Side CS-Countershaft

For transmissions not listed, contact your authorized Chelsea Distributor.

Parker Hannifin Corporation
Chelsea Products Division
Olive Branch, MS 38654 USA

MACK TRANSMISSION INDEX

Transmission Make and Model	PTO Appl. Number	Number Forward Speeds	Teeth in PTO Driver
TRL10760	MAK-20	5	L34-R34
TRL1078	MAK-16	5	L34-R34
TRL10780	MAK-20	5	L34-R34
TRQL7220	MAK-17	20	L38-R38
TRT720-7220	MAK-17	15	L38-R38
TRTL720-7220	MAK-17	15	L38-R38
TRTXL107	MAK-18	12	L37-R37
TRTXL1070	MAK-19	12	L37-R37
TRTXL1070-B	MAK-19	12	L37-R37
TRXL107	MAK-18	6	L37-R37
TRXL1070	MAK-21	6	L37-R37
TRXL1070-A	MAK-21	6	L37-R37
TRXL1071	MAK-18	6	L37-R37
TRXL10710	MAK-21	6	L37-R37
TRXL1071-A	MAK-18	6	L37-R37
TRXL1076	MAK-16	6	L34-R34
TRXL107-A	MAK-18	6	L37-R37
TX2060	MAK-25	7	L54-R54
X107	MAK-18	5	L37-R37
X1070	MAK-21	6	L37-R37
X1070-A	MAK-21	6	L37-R37
X1071	MAK-18	5	L37-R37
X10710	MAK-21	6	L37-R37
X10710-A	MAK-21	6	L37-R37
X1071-A	MAK-18	6	L37-R37
X107-A	MAK-18	6	L37-R37
X2060	MAK-25	7	L54-R54

IMPORTANT: See Safety Information in Section 1 of the Chelsea Applications catalog HY25-3000/US.

Transmission PTO Driver & Apertures (Viewed from Rear of Transmission)

L-Left Side R-Right Side B-Bottom Side T-Top Side CS-Countershaft

For transmissions not listed, contact your authorized Chelsea Distributor.

Parker Hannifin Corporation
Chelsea Products Division
Olive Branch, MS 38654 USA

DX1070
DX1071
DX1078
DX10780
DX10781
TRDXL107
TRDXL1070
TRDXL1071
TRDXL1078
TRDXL10780
TRDXL10781
TRL1076
TRL1078
TRXL1076

LEFT SIDE ONLY

TRANSMISSION GEAR DATA:
L.S. 08-BOLT Opening Gear FORWARD of Centerline
34 Teeth - SPUR

PITCH LINE TO APERTURE FACE:
0.8050" (20.4500MM)

RIGHT SIDE ONLY

TRANSMISSION GEAR DATA:
R.S. 06-BOLT Opening Gear FORWARD of Centerline
34 Teeth - SPUR

PITCH LINE TO APERTURE FACE:
3.0850" (78.3600MM)

Caution: Application Approval Required for PTO Output Shaft Speeds Above 2500 RPM

LEFT Side PTO Model	Inter. Torq.	Dir. Rot.	Engine % Fwd.	Engine % Rev.	Filler Block	Adapter Assy.	Stud Kit	RIGHT Side PTO Model	Inter. Torq.	Dir. Rot.	Engine % Fwd.	Engine % Rev.	Filler Block	Adapter Assy.	Stud Kit
ONE SPEED - TWO GEAR - MECHANICAL SHIFT															
221ZCAHX-*5	250	Opp	32		7-A-032(29)	328564X	Furnished	221XCAHX-*3	250	Eng	32		7-A-032(29)	328530-1X	328170-83X
221ZEAHX-*5	250	Opp	37			328564X	Furnished	221XEAHX-*3	250	Eng	37			328530-1X	328170-83X
221ZLAHX-*5	200	Opp	50			328564X	Furnished	221XLAHX-*3	200	Eng	50			328530-1X	328170-83X
221ZPAHX-*5	200	Opp	60			328564X	Furnished	221XPAHX-*3	200	Eng	60			328530-1X	328170-83X
489XAAHX-*5 (12)	250	Opp	28				Furnished	442KFAHX-*3 (2)	250	Eng	45			328530-1X	7170-16X
489XCAHX-*5 (13)	250	Opp	36				Furnished	442KHAHX-*3 (15)	250	Eng	52			328530-1X	7170-16X
489XFAHX-*5 (2)	250	Opp	45				Furnished	442KLAHX-*3 (1)	250	Eng	58			328530-1X	7170-16X
489XHAHX-*5 (15)	250	Opp	52				Furnished	442KQAHX-*3 (1)	225	Eng	62			328530-1X	7170-16X
489XLAHX-*5 (1)	250	Opp	58				Furnished	442KRAHX-*3 (1)	225	Eng	72			328530-1X	7170-16X
489XQAHX-*5 (1)	225	Opp	62				Furnished	442KSAHX-*3 (1)	200	Eng	86			328530-1X	7170-16X
489XRAHX-*5 (1)	225	Opp	72				Furnished	442KUAHX-*3 (1)	195	Eng	102			328530-1X	7170-16X
489XSAHX-*5 (1)	200	Opp	86				Furnished	442KWAHX-*3 (1)	175	Eng	121			328530-1X	7170-16X
489XUAHX-*5 (1)	195	Opp	102				Furnished	442KXAHX-*3 (1)	140	Eng	143			328530-1X	7170-16X
489XWAHX-*5 (1)	175	Opp	121				Furnished	660KHAHX-*3 (15)	375	Eng	52			328530-1X	7170-16X
489XXAHX-*5 (1)	140	Opp	143				Furnished								
680XFAHX-*5 (10)	375	Opp	45				Furnished								
680XHAHX-*5 (20)	375	Opp	52				Furnished								
680XQAHX-*5 (11)	375	Opp	62				Furnished								
680XRAHX-*5 (18)	350	Opp	72				Furnished								
680XSAHX-*5 (14)	325	Opp	86				Furnished								
823XBAHX-*3 (22)	500	Opp	30				Furnished								
823XDAHX-*3 (26)	500	Opp	36				Furnished								
823XGAHX-*3 (27)	500	Opp	36				Furnished								
823XJAHX-*3 (23)	500	Opp	46				Furnished								
823XMAHX-*3 (21)	500	Opp	54				Furnished								
823XRAHX-*3 (25)	400	Opp	75				Furnished								
823XTKTX-*3 (17)	372	Opp	90		8-A-165		7170-116X								
880XBAHX-*3 (3)	500	Opp	30				Furnished								
880XDAHX-*3 (4)	500	Opp	36				Furnished								
880XGAHX-*3 (9)	500	Opp	39				Furnished								
880XJAHX-*3 (5)	500	Opp	46				Furnished								
880XMAHX-*3 (6)	500	Opp	54				Furnished								

Continued Next Page

CAUTION: Do not use geared adapters with 442 "A" and "C" ratios.

CAUTION: 660/680 Series: Applications above 1500 RPM, contact Chelsea Technical Service for approval.

NOTE: With gear selector lever in low range for the front portion of compound transmissions, multiply speeds shown by the factor listed for the transmission: TRDXL-107, DX-107 multiply by .595; TRDXL-1071, DX-1071 multiply by .350. This feature can cause insufficient PTO speed, particularly in spreading applications.

NOTE: With gear selector lever in high range for the front portion of compound transmissions, multiply speed shown by the factor listed for the transmission: TRDXL-1070, DX-1070, TRDXL-10780, DX-10780 multiply by 1.62. This feature can cause excessive PTO speeds.

NOTE: The AK & XK output flanges can not be used with the "A" & "C" ratios on the 489 Series PTOs due to mounting stud interference. Use a RA or RB rotatable flange for the XK and the RA for the AK flange.

NOTE: 272/282 Series stated torque values on this page are for Intermittent and Continuous Duty Applications.

(1) Input Gear Part No. 5-P-1004
(2) Input Gear Part No. 5-P-1077
(3) Input Gear Part No. 5-P-1100
(4) Input Gear Part No. 5-P-1101
(5) Input Gear Part No. 5-P-1102
(6) Input Gear Part No. 5-P-1103
(9) Input Gear Part No. 5-P-1135
(10) Input Gear Part No. 5-P-1242
(11) Input Gear Part No. 5-P-1246
(12) Input Gear Part No. 5-P-1280
(13) Input Gear Part No. 5-P-1287
(14) Input Gear Part No. 5-P-1322
(15) Input Gear Part No. 5-P-1364
(17) Input Gear Part No. 5-P-1395
(18) Input Gear Part No. 5-P-1441
(20) Input Gear Part No. 5-P-1494
(21) Input Gear Part No. 5-P-283
(22) Input Gear Part No. 5-P-285
(23) Input Gear Part No. 5-P-325
(25) Input Gear Part No. 5-P-721
(26) Input Gear Part No. 5-P-971
(27) Input Gear Part No. 5-P-980
(29) Filler block furnished with P.T.O. but not required

Parker Hannifin Corporation
Chelsea Products Division
Olive Branch, MS 38654 USA

DX1070
DX1071
DX1078
DX10780
DX10781
TRDXL107
TRDXL1070
TRDXL1071
TRDXL1078
TRDXL10780
TRDXL10781
TRL1076
TRL1078
TRXL1076

LEFT SIDE ONLY

TRANSMISSION GEAR DATA:
L.S. 08-BOLT Opening Gear FORWARD of Centerline
34 Teeth - SPUR

PITCH LINE TO APERTURE FACE:
0.8050" (20.4500MM)

RIGHT SIDE ONLY

TRANSMISSION GEAR DATA:
R.S. 06-BOLT Opening Gear FORWARD of Centerline
34 Teeth - SPUR

PITCH LINE TO APERTURE FACE:
3.0850" (78.3600MM)

Caution: Application Approval Required for PTO Output Shaft Speeds Above 2500 RPM

LEFT Side PTO Model	Inter. Torq.	Dir. Rot.	Engine % Fwd.	Engine % Rev.	Filler Block	Adapter Assy.	Stud Kit	RIGHT Side PTO Model	Inter. Torq.	Dir. Rot.	Engine % Fwd.	Engine % Rev.	Filler Block	Adapter Assy.	Stud Kit
ONE SPEED - TWO GEAR - MECHANICAL SHIFT															
880XQAHX-*3 (16)	450	Opp	64				Furnished								
880XRAHX-*3 (7)	400	Opp	75				Furnished								
880XTAHX-*3 (8)	350	Opp	96				Furnished								
ONE SPEED - TWO GEAR POWERSHIFT (AIR OR HYDRAULIC)															
282XBAJX-*5	300	Opp	31				Furnished	272KAAJX-*3	300	Eng	25			328530-1X	7170-16X
282XCAJX-*5	300	Opp	37				Furnished	272KBAJX-*3	300	Eng	31			328530-1X	7170-16X
282XDAJX-*5	300	Opp	44				Furnished	272KCAJX-*3	300	Eng	37			328530-1X	7170-16X
282XGAJX-*5	300	Opp	52				Furnished	272KDAJX-*3	325	Eng	42			328530-1X	7170-16X
282XKAJX-*5	300	Opp	59				Furnished	272KGAJX-*3	300	Eng	52			328530-1X	7170-16X
282XMAJX-*5	300	Opp	66				Furnished	272KKAJX-*3	300	Eng	59			328530-1X	7170-16X
282XPAJX-*5	300	Opp	73				Furnished	272KMAJX-*3	300	Eng	66			328530-1X	7170-16X
282XSAJX-*5	300	Opp	82				Furnished	272KPAJX-*3	300	Eng	73			328530-1X	7170-16X
282XTAJX-*5	300	Opp	92				Furnished	272KSAJX-*3	300	Eng	82			328530-1X	7170-16X
ONE SPEED - TWO GEAR - POWERSHIFT (AIR)															
230XAAJX-*3	250	Opp	24			328481X	Furnished	236KAAHX-*3 (19)	250	Eng	31			328530-1X	7170-16X
230XBAJX-*3	250	Opp	31			328481X	Furnished	236KDAHX-*3 (1)	250	Eng	47			328530-1X	7170-16X
230XDAJX-*3	250	Opp	35			328481X	Furnished	236KKAHX-*3 (1)	250	Eng	60			328530-1X	7170-16X
230XKAJX-*3	250	Opp	48			328481X	Furnished	236KQAHX-*3 (1)	250	Eng	81			328530-1X	7170-16X
230XQAJX-*3	250	Opp	64			328481X	Furnished	236KUAHX-*3 (1)	225	Eng	93			328530-1X	7170-16X
230XUAJX-*3	225	Opp	102			328481X	Furnished								
238XAAHX-*5 (19)	250	Opp	31				Furnished								
238XDAHX-*5 (1)	250	Opp	47				Furnished								
238XKAHX-*5 (1)	250	Opp	60				Furnished								
238XQAHX-*5 (1)	250	Opp	81				Furnished								
238XUAHX-*5 (1)	225	Opp	93				Furnished								
885XBAHX-*3 (3)	500	Opp	30				Furnished								
885XGAHX-*3 (9)	500	Opp	39				Furnished								
885XJAHX-*3 (5)	500	Opp	46				Furnished								
885XMAHX-*3 (6)	500	Opp	54				Furnished								

Continued Next Page

CAUTION: Do not use geared adapters with 442 "A" and "C" ratios.

CAUTION: 660/680 Series: Applications above 1500 RPM, contact Chelsea Technical Service for approval.

NOTE: With gear selector lever in low range for the front portion of compound transmissions, multiply speeds shown by the factor listed for the transmission: TRDXL-107, DX-107 multiply by .595; TRDXL-1071, DX-1071 multiply by .350. This feature can cause insufficient PTO speed, particularly in spreading applications.

NOTE: With gear selector lever in high range for the front portion of compound transmissions, multiply speed shown by the factor listed for the transmission: TRDXL-1070, DX-1070, TRDXL-10780, DX-10780 multiply by 1.62. This feature can cause excessive PTO speeds.

NOTE: The AK & XK output flanges can not be used with the "A" & "C" ratios on the 489 Series PTOs due to mounting stud interference. Use a RA or RB rotatable flange for the XK and the RA for the AK flange.

NOTE: 272/282 Series stated torque values on this page are for Intermittent and Continuous Duty Applications.

(1) Input Gear Part No. 5-P-1004
(3) Input Gear Part No. 5-P-1100
(5) Input Gear Part No. 5-P-1102
(6) Input Gear Part No. 5-P-1103
(7) Input Gear Part No. 5-P-1104
(8) Input Gear Part No. 5-P-1105
(9) Input Gear Part No. 5-P-1135
(16) Input Gear Part No. 5-P-1385
(19) Input Gear Part No. 5-P-1486

Parker Hannifin Corporation
Chelsea Products Division
Olive Branch, MS 38654 USA

DX1070
DX1071
DX1078
DX10780
DX10781
TRDXL107
TRDXL1070
TRDXL1071
TRDXL1078
TRDXL10780
TRDXL10781
TRL1076
TRL1078
TRXL1076

LEFT SIDE ONLY

TRANSMISSION GEAR DATA:
L.S. 08-BOLT Opening Gear FORWARD of Centerline
34 Teeth - SPUR

PITCH LINE TO APERTURE FACE:
0.8050" (20.4500MM)

RIGHT SIDE ONLY

TRANSMISSION GEAR DATA:
R.S. 06-BOLT Opening Gear FORWARD of Centerline
34 Teeth - SPUR

PITCH LINE TO APERTURE FACE:
3.0850" (78.3600MM)

Caution: Application Approval Required for PTO Output Shaft Speeds Above 2500 RPM

LEFT Side PTO Model	Inter. Torq.	Dir. Rot.	Engine %		Filler Block	Adapter Assy.	Stud Kit	RIGHT Side PTO Model	Inter. Torq.	Dir. Rot.	Engine %		Filler Block	Adapter Assy.	Stud Kit
			Fwd.	Rev.							Fwd.	Rev.			
ONE SPEED - FORWARD & REVERSE															
348ZFAHX-*5 (24)	200	Opp	39	41	8-A-093(T) 8-A-032(P)		Furnished	340XFAHX-*5 (24)	200	Eng	39	41	7-A-140(P)(28)	328530-1X	7170-16X
352ZSAHX-*5 (1)	140	Opp	87	113		328564X	Furnished	352XSAHX-*3 (1)	140	Eng	87	113		328530-1X	7170-16X
863XBAHX-*5	500	Opp	30	38			Furnished								
GEARED ADAPTERS															
628XAHX-3AH	250	Eng	0				Furnished								

CAUTION: Do not use geared adapters with 442 "A" and "C" ratios.

CAUTION: 660/680 Series: Applications above 1500 RPM, contact Chelsea Technical Service for approval.

NOTE: With gear selector lever in low range for the front portion of compound transmissions, multiply speeds shown by the factor listed for the transmission: TRDXL-107, DX-107 multiply by .595; TRDXL-1071, DX-1071 multiply by .350. This feature can cause insufficient PTO speed, particularly in spreading applications.

NOTE: With gear selector lever in high range for the front portion of compound transmissions, multiply speed shown by the factor listed for the transmission: TRDXL-1070, DX-1070, TRDXL-10780, DX-10780 multiply by 1.62. This feature can cause excessive PTO speeds.

NOTE: The AK & XK output flanges can not be used with the "A" & "C" ratios on the 489 Series PTOs due to mounting stud interference. Use a RA or RB rotatable flange for the XK and the RA for the AK flange.

NOTE: 272/282 Series stated torque values on this page are for Intermittent and Continuous Duty Applications.

(1) Input Gear Part No. 5-P-1004
(24) Input Gear Part No. 5-P-581
(28) Filler block furnished with P.T.O.

Parker Hannifin Corporation
Chelsea Products Division
Olive Branch, MS 38654 USA

QL7220
TRDL720-7220
TRDXT720-7220
TRDX720-7220
TRD7250
TRQL7220
TRTL720-7220
TRT720-7220
TR720-7220

LEFT SIDE ONLY

TRANSMISSION GEAR DATA:
L.S. 06-BOLT Opening Gear REAR of Centerline
38 Teeth - SPUR

PITCH LINE TO APERTURE FACE:
3.0500" (77.4700MM)

RIGHT SIDE ONLY

TRANSMISSION GEAR DATA:
R.S. 06-BOLT Opening Gear REAR of Centerline
38 Teeth - SPUR

PITCH LINE TO APERTURE FACE:
3.0500" (77.4700MM)

Caution: Application Approval Required for PTO Output Shaft Speeds Above 2500 RPM

LEFT Side PTO Model	Inter. Torq.	Dir. Rot.	Engine % Fwd.	Engine % Rev.	Filler Block	Adapter Assy.	Stud Kit	RIGHT Side PTO Model	Inter. Torq.	Dir. Rot.	Engine % Fwd.	Engine % Rev.	Filler Block	Adapter Assy.	Stud Kit
ONE SPEED - TWO GEAR - MECHANICAL SHIFT															
442KFABX-*6 (2)	250	Eng	75		7-A-032(T)	328530-2X	7170-16X	442KFABX-*4 (2)	250	Eng	75		7-A-032(T)	328530-2X	7170-16X
442KLABX-*6 (1)	250	Eng	97		7-A-032(T)	328530-2X	7170-16X	442KLABX-*4 (1)	250	Eng	97		7-A-032(T)	328530-2X	7170-16X
442KQABX-*6 (1)	225	Eng	104		7-A-032(T)	328530-2X	7170-16X	442KQABX-*4 (1)	225	Eng	104		7-A-032(T)	328530-2X	7170-16X
442KRABX-*6 (1)	225	Eng	121		7-A-032(T)	328530-2X	7170-16X	442KRABX-*4 (1)	225	Eng	121		7-A-032(T)	328530-2X	7170-16X
442KSABX-*6 (1)	200	Eng	144		7-A-032(T)	328530-2X	7170-16X	442KSABX-*4 (1)	200	Eng	144		7-A-032(T)	328530-2X	7170-16X
442KUABX-*6 (1)	195	Eng	172		7-A-032(T)	328530-2X	7170-16X	442KUABX-*4 (1)	195	Eng	172		7-A-032(T)	328530-2X	7170-16X
442KWABX-*6 (1)	175	Eng	202		7-A-032(T)	328530-2X	7170-16X	442KWABX-*4 (1)	175	Eng	202		7-A-032(T)	328530-2X	7170-16X
442KXABX-*6 (1)	140	Eng	239		7-A-032(T)	328530-2X	7170-16X	442KXABX-*4 (1)	140	Eng	239		7-A-032(T)	328530-2X	7170-16X
ONE SPEED - FORWARD & REVERSE															
340XFABX-*4 (3)	200	Eng	68	72	7-A-140(P)(4) 7-A-032(T)	328530-2X	7170-16X	340XFABX-*4 (3)	200	Eng	68	72	7-A-140(P)(4) 7-A-032(T)	328530-2X	7170-16X

(1) Input Gear Part No. 5-P-1001
(2) Input Gear Part No. 5-P-1076
(3) Input Gear Part No. 5-P-579
(4) Filler block furnished with P.T.O.

Parker Hannifin Corporation
Chelsea Products Division
Olive Branch, MS 38654 USA

D107
TRDL107
TRTXL107
TRXL107
TRXL107-A
TRXL1071
TRXL1071-A
T107
X107
X107-A
X1071
X1071-A

LEFT SIDE ONLY

TRANSMISSION GEAR DATA:
L.S. 08-BOLT Opening Gear FORWARD of Centerline
37 Teeth - SPUR

PITCH LINE TO APERTURE FACE:
0.5700" (14.4800MM)

RIGHT SIDE ONLY

TRANSMISSION GEAR DATA:
R.S. 06-BOLT Opening Gear FORWARD of Centerline
37 Teeth - SPUR

PITCH LINE TO APERTURE FACE:
2.8340" (71.9800MM)

Caution: Application Approval Required for PTO Output Shaft Speeds Above 2500 RPM

LEFT Side PTO Model	Inter. Torq.	Dir. Rot.	Engine % Fwd.	Engine % Rev.	Filler Block	Adapter Assy.	Stud Kit	RIGHT Side PTO Model	Inter. Torq.	Dir. Rot.	Engine % Fwd.	Engine % Rev.	Filler Block	Adapter Assy.	Stud Kit
ONE SPEED - TWO GEAR - MECHANICAL SHIFT															
489KAAHX-*5 (12)	250	Opp	64		8-A-062 8-A-093		328170-8X	442KFAHX-*3 (2)	250	Eng	101		7-A-240(T)	328530-1X	328170-168X
489KCAHX-*5 (13)	250	Opp	81		8-A-062 8-A-093		328170-8X	442KHAHX-*3 (15)	250	Eng	117		7-A-240(T)	328530-1X	328170-168X
489KFAHX-*5 (2)	250	Opp	101		8-A-062 8-A-093		328170-8X	442KLAHX-*3 (1)	250	Eng	130		7-A-240(T)	328530-1X	328170-168X
489KHAHX-*5 (15)	250	Opp	117		8-A-062 8-A-093		328170-8X	442KQAHX-*3 (1)	225	Eng	140		7-A-240(T)	328530-1X	328170-168X
489KLAHX-*5 (1)	250	Opp	130		8-A-062 8-A-093		328170-8X	442KRAHX-*3 (1)	225	Eng	162		7-A-240(T)	328530-1X	328170-168X
489KQAHX-*5 (1)	225	Opp	140		8-A-062 8-A-093		328170-8X	442KSAHX-*3 (1)	200	Eng	193		7-A-240(T)	328530-1X	328170-168X
489KRAHX-*5 (1)	225	Opp	162		8-A-062 8-A-093		328170-8X	442KUAHX-*3 (1)	195	Eng	230		7-A-240(T)	328530-1X	328170-168X
489KSAHX-*5 (1)	200	Opp	193		8-A-062 8-A-093		328170-8X	442KWAHX-*3 (1)	175	Eng	271		7-A-240(T)	328530-1X	328170-168X
489KUAHX-*5 (1)	195	Opp	230		8-A-062 8-A-093		328170-8X	442KXAHX-*3 (1)	140	Eng	321		7-A-240(T)	328530-1X	328170-168X
489KWAHX-*5 (1)	175	Opp	271		8-A-062 8-A-093		328170-8X	660KHAHX-*3 (15)	375	Eng	117		7-A-240(T)	328530-1X	328170-168X
489KXAHX-*5 (1)	140	Opp	321		8-A-062 8-A-093		328170-8X								
680KFAHX-*5 (10)	375	Opp	101		8-A-062 8-A-093		328170-8X								
680KHAHX-*5 (19)	375	Opp	117		8-A-062 8-A-093		328170-8X								
680KQAHX-*5 (11)	375	Opp	140		8-A-062 8-A-093		328170-8X								
680KRAHX-*5 (17)	350	Opp	162		8-A-062 8-A-093		328170-8X								
680KSAHX-*5 (14)	325	Opp	193		8-A-062 8-A-093		328170-8X								

Continued Next Page

CAUTION: Do not use geared adapters with 442 "A" and "C" ratios.

CAUTION: 660/680 Series: Applications above 1500 RPM, contact Chelsea Technical Service for approval.

NOTE: All speeds shown are with transmission in 5th speed. For PTO speeds with the main transmission in all other gears, multiply speeds shown by the following: for 1st - .116, 2nd - .200, 3rd - .353, 4th - .603.

NOTE: The 812 Series will not mount. The output shaft interferes with the reverse idler bulge.

NOTE: The AK & XK output flanges can not be used with the "A" & "C" ratios on the 489 Series PTOs due to mounting stud interference. Use a RA or RB rotatable flange for the XK and the RA for the AK flange.

NOTE: 272/282 Series stated torque values on this page are for Intermittent and Continuous Duty Applications.

(1) Input Gear Part No. 5-P-1004
(2) Input Gear Part No. 5-P-1077
(10) Input Gear Part No. 5-P-1242
(11) Input Gear Part No. 5-P-1246
(12) Input Gear Part No. 5-P-1280
(13) Input Gear Part No. 5-P-1287
(14) Input Gear Part No. 5-P-1322
(15) Input Gear Part No. 5-P-1364
(17) Input Gear Part No. 5-P-1441
(19) Input Gear Part No. 5-P-1494

Parker Hannifin Corporation
Chelsea Products Division
Olive Branch, MS 38654 USA

D107
TRDL107
TRTXL107
TRXL107
TRXL107-A
TRXL1071
TRXL1071-A
T107
X107
X107-A
X1071
X1071-A

LEFT SIDE ONLY

TRANSMISSION GEAR DATA:
L.S. 08-BOLT Opening Gear FORWARD of Centerline
37 Teeth - SPUR

PITCH LINE TO APERTURE FACE:
0.5700" (14.4800MM)

RIGHT SIDE ONLY

TRANSMISSION GEAR DATA:
R.S. 06-BOLT Opening Gear FORWARD of Centerline
37 Teeth - SPUR

PITCH LINE TO APERTURE FACE:
2.8340" (71.9800MM)

Caution: Application Approval Required for PTO Output Shaft Speeds Above 2500 RPM

LEFT Side PTO Model	Inter. Torq.	Dir. Rot.	Engine % Fwd.	Engine % Rev.	Filler Block	Adapter Assy.	Stud Kit	RIGHT Side PTO Model	Inter. Torq.	Dir. Rot.	Engine % Fwd.	Engine % Rev.	Filler Block	Adapter Assy.	Stud Kit
ONE SPEED - TWO GEAR - MECHANICAL SHIFT															
823XBAHX-*5 (21)	500	Opp	69		8-A-190		328170-14X								
823XDAHX-*5 (25)	500	Opp	81		8-A-190		328170-14X								
823XGAHX-*5 (26)	500	Opp	88		8-A-190		328170-14X								
823XJAHX-*5 (22)	500	Opp	104		8-A-190		328170-14X								
823XMAHX-*5 (20)	500	Opp	122		8-A-190		328170-14X								
823XRAHX-*5 (24)	400	Opp	168		8-A-190		328170-14X								
880KBAHX-*5 (3)	500	Opp	69		8-A-190		328170-14X								
880KDAHX-*5 (4)	500	Opp	81		8-A-190		328170-14X								
880KGAHX-*5 (9)	500	Opp	88		8-A-190		328170-14X								
880KJAHX-*5 (5)	500	Opp	104		8-A-190		328170-14X								
880KMAHX-*5 (6)	500	Opp	122		8-A-190		328170-14X								
880KQAHX-*5 (16)	450	Opp	142		8-A-190		328170-14X								
880KRAHX-*5 (7)	400	Opp	168		8-A-190		328170-14X								
880KTAHX-*5 (8)	350	Opp	217		8-A-190		328170-14X								
ONE SPEED - TWO GEAR POWERSHIFT (AIR OR HYDRAULIC)															
282KBAJX-*5	300	Opp	69		8-A-093(P) 8-A-062(T)		328170-8X	272KAAJX-*3	300	Eng	56		7-A-240(T)	328530-1X	328170-168X
282KCAJX-*5	300	Opp	83		8-A-093(P) 8-A-062(T)		328170-8X	272KBAJX-*3	300	Eng	69		7-A-240(T)	328530-1X	328170-168X
282KDAJX-*5	300	Opp	99		8-A-093(P) 8-A-062(T)		328170-8X	272KCAJX-*3	300	Eng	83		7-A-240(T)	328530-1X	328170-168X
282KGAJX-*5	300	Opp	118		8-A-093(P) 8-A-062(T)		328170-8X	272KDAJX-*3	325	Eng	94		7-A-240(T)	328530-1X	328170-168X
282KKAJX-*5	300	Opp	132		8-A-093(P) 8-A-062(T)		328170-8X	272KGAJX-*3	300	Eng	118		7-A-240(T)	328530-1X	328170-168X
282KMAJX-*5	300	Opp	148		8-A-093(P) 8-A-062(T)		328170-8X	272KKAJX-*3	300	Eng	132		7-A-240(T)	328530-1X	328170-168X
282KPAJX-*5	300	Opp	165		8-A-093(P) 8-A-062(T)		328170-8X	272KMAJX-*3	300	Eng	148		7-A-240(T)	328530-1X	328170-168X

Continued Next Page

CAUTION: Do not use geared adapters with 442 "A" and "C" ratios.

CAUTION: 660/680 Series: Applications above 1500 RPM, contact Chelsea Technical Service for approval.

NOTE: All speeds shown are with transmission in 5th speed. For PTO speeds with the main transmission in all other gears, multiply speeds shown by the following: for 1st - .116, 2nd - .200, 3rd - .353, 4th - .603.

NOTE: The 812 Series will not mount. The output shaft interferes with the reverse idler bulge.

NOTE: The AK & XK output flanges can not be used with the "A" & "C" ratios on the 489 Series PTOs due to mounting stud interference. Use a RA or RB rotatable flange for the XK and the RA for the AK flange.

NOTE: 272/282 Series stated torque values on this page are for Intermittent and Continuous Duty Applications.

(3) Input Gear Part No. 5-P-1100
(4) Input Gear Part No. 5-P-1101
(5) Input Gear Part No. 5-P-1102
(6) Input Gear Part No. 5-P-1103
(7) Input Gear Part No. 5-P-1104
(8) Input Gear Part No. 5-P-1105
(9) Input Gear Part No. 5-P-1135
(16) Input Gear Part No. 5-P-1385
(20) Input Gear Part No. 5-P-283
(21) Input Gear Part No. 5-P-285
(22) Input Gear Part No. 5-P-325
(24) Input Gear Part No. 5-P-721
(25) Input Gear Part No. 5-P-971
(26) Input Gear Part No. 5-P-980

Parker Hannifin Corporation
Chelsea Products Division
Olive Branch, MS 38654 USA

D107
TRDL107
TRTXL107
TRXL107
TRXL107-A
TRXL1071
TRXL1071-A
T107
X107
X107-A
X1071
X1071-A

LEFT SIDE ONLY

TRANSMISSION GEAR DATA:
L.S. 08-BOLT Opening Gear FORWARD of Centerline
37 Teeth - SPUR

PITCH LINE TO APERTURE FACE:
0.5700" (14.4800MM)

RIGHT SIDE ONLY

TRANSMISSION GEAR DATA:
R.S. 06-BOLT Opening Gear FORWARD of Centerline
37 Teeth - SPUR

PITCH LINE TO APERTURE FACE:
2.8340" (71.9800MM)

Caution: Application Approval Required for PTO Output Shaft Speeds Above 2500 RPM

LEFT Side PTO Model	Inter. Torq.	Dir. Rot.	Engine % Fwd.	Engine % Rev.	Filler Block	Adapter Assy.	Stud Kit	RIGHT Side PTO Model	Inter. Torq.	Dir. Rot.	Engine % Fwd.	Engine % Rev.	Filler Block	Adapter Assy.	Stud Kit
ONE SPEED - TWO GEAR POWERSHIFT (AIR OR HYDRAULIC)															
282KSAJX-*5	271	Opp	184		8-A-093(P) 8-A-062(T)		328170-8X	272KPAJX-*3	300	Eng	165		7-A-240(T)	328530-1X	328170-168X
282KTAJX-*5	242	Opp	206		8-A-093(P) 8-A-062(T)		328170-8X	272KSAJX-*3	271	Eng	184		7-A-240(T)	328530-1X	328170-168X
ONE SPEED - TWO GEAR - POWERSHIFT (AIR)															
230XAAJX-*5	250	Opp	53		7-A-032	310778X	Furnished	236KAAHX-*3 (18)	250	Eng	70		7-A-240(T)	328530-1X	328170-168X
230XBAJX-*5	250	Opp	69		7-A-032	310778X	Furnished	236KDAHX-*3 (1)	250	Eng	105		7-A-240(T)	328530-1X	328170-168X
230XDAJX-*5	250	Opp	80		7-A-032	310778X	Furnished	236KKAHX-*3 (1)	250	Eng	135		7-A-240(T)	328530-1X	328170-168X
230XKAJX-*5	250	Opp	108		7-A-032	310778X	Furnished	236KQAHX-*3 (1)	250	Eng	182		7-A-240(T)	328530-1X	328170-168X
230XQAJX-*5	250	Opp	143		7-A-032	310778X	Furnished	236KUAHX-*3 (1)	225	Eng	209		7-A-240(T)	328530-1X	328170-168X
230XUAJX-*5	225	Opp	229		7-A-032	310778X	Furnished								
238KAAHX-*5 (18)	250	Eng	70		8-A-062 8-A-093		328170-8X								
238KDAHX-*5 (1)	250	Eng	105		8-A-062 8-A-093		328170-8X								
238KKAHX-*5 (1)	250	Opp	135		8-A-062 8-A-093		328170-8X								
238KQAHX-*5 (1)	250	Opp	182		8-A-062 8-A-093		328170-8X								
238KUAHX-*5 (1)	225	Opp	209		8-A-062 8-A-093		328170-8X								
885XBAHX-*5 (3)	500	Opp	69		8-A-190		328170-14X								
885XGAHX-*5 (9)	500	Opp	88		8-A-190		328170-14X								
885XJAHX-*5 (5)	500	Opp	104		8-A-190		328170-14X								
885XMAHX-*5 (6)	500	Opp	122		8-A-190		328170-14X								
ONE SPEED - FORWARD & REVERSE															
348XFAHX-*5 (23)	200	Opp	88	92	8-A-190(T)		328170-8X	340XFAHX-*5 (23)	200	Eng	88	92	7-A-140(P)(27) 7-A-240(T)	328530-1X	328170-168X
352XSAHX-*5 (1)	140	Opp	196	254		328564X	Furnished	352XSAHX-*3 (1)	140	Eng	196	254	7-A-240(T)	328530-1X	328170-168X
863XBAHX-*5	500	Opp	69	85	8-A-190		328170-15X								

Continued Next Page

CAUTION: Do not use geared adapters with 442 "A" and "C" ratios.

CAUTION: 660/680 Series: Applications above 1500 RPM, contact Chelsea Technical Service for approval.

NOTE: All speeds shown are with transmission in 5th speed. For PTO speeds with the main transmission in all other gears, multiply speeds shown by the following: for 1st - .116, 2nd - .200, 3rd - .353, 4th - .603.

NOTE: The 812 Series will not mount. The output shaft interferes with the reverse idler bulge.

NOTE: The AK & XK output flanges can not be used with the "A" & "C" ratios on the 489 Series PTOs due to mounting stud interference. Use a RA or RB rotatable flange for the XK and the RA for the AK flange.

NOTE: 272/282 Series stated torque values on this page are for Intermittent and Continuous Duty Applications.

(1) Input Gear Part No. 5-P-1004
(3) Input Gear Part No. 5-P-1100
(5) Input Gear Part No. 5-P-1102
(6) Input Gear Part No. 5-P-1103
(9) Input Gear Part No. 5-P-1135
(18) Input Gear Part No. 5-P-1486
(23) Input Gear Part No. 5-P-581
(27) Filler block furnished with P.T.O.

Parker Hannifin Corporation
Chelsea Products Division
Olive Branch, MS 38654 USA

D107
TRDL107
TRTXL107
TRXL107
TRXL107-A
TRXL1071
TRXL1071-A
T107
X107
X107-A
X1071
X1071-A

LEFT SIDE ONLY

TRANSMISSION GEAR DATA:
L.S. 08-BOLT Opening Gear FORWARD of Centerline
37 Teeth - SPUR

PITCH LINE TO APERTURE FACE:
0.5700" (14.4800MM)

RIGHT SIDE ONLY

TRANSMISSION GEAR DATA:
R.S. 06-BOLT Opening Gear FORWARD of Centerline
37 Teeth - SPUR

PITCH LINE TO APERTURE FACE:
2.8340" (71.9800MM)

Caution: Application Approval Required for PTO Output Shaft Speeds Above 2500 RPM

LEFT Side PTO Model	Inter. Torq.	Dir. Rot.	Engine %		Filler Block	Adapter Assy.	Stud Kit	RIGHT Side PTO Model	Inter. Torq.	Dir. Rot.	Engine %		Filler Block	Adapter Assy.	Stud Kit
			Fwd.	Rev.							Fwd.	Rev.			
GEARED ADAPTERS															
628XAHX-3AH	250	Eng	0		8-A-190		328170-8X								

CAUTION: Do not use geared adapters with 442 "A" and "C" ratios.

CAUTION: 660/680 Series: Applications above 1500 RPM, contact Chelsea Technical Service for approval.

NOTE: All speeds shown are with transmission in 5th speed. For PTO speeds with the main transmission in all other gears, multiply speeds shown by the following: for 1st - .116, 2nd - .200, 3rd - .353, 4th - .603.

NOTE: The 812 Series will not mount. The output shaft interferes with the reverse idler bulge.

NOTE: The AK & XK output flanges can not be used with the "A" & "C" ratios on the 489 Series PTOs due to mounting stud interference. Use a RA or RB rotatable flange for the XK and the RA for the AK flange.

NOTE: 272/282 Series stated torque values on this page are for Intermittent and Continuous Duty Applications.

Parker Hannifin Corporation
Chelsea Products Division
Olive Branch, MS 38654 USA

D1070
G1070
TRDLG1070
TRDL1070
TRTXL1070
TRTXL1070-B
T1070
T1070-B

LEFT SIDE ONLY

TRANSMISSION GEAR DATA:
L.S. 08-BOLT Opening Gear REAR of Centerline
37 Teeth - SPUR

PITCH LINE TO APERTURE FACE:
0.3750" (9.5200MM)

RIGHT SIDE ONLY

TRANSMISSION GEAR DATA:
R.S. 06-BOLT Opening Gear REAR of Centerline
37 Teeth - SPUR

PITCH LINE TO APERTURE FACE:
2.8340" (71.9800MM)

Caution: Application Approval Required for PTO Output Shaft Speeds Above 2500 RPM

LEFT Side PTO Model	Inter. Torq.	Dir. Rot.	Engine % Fwd.	Engine % Rev.	Filler Block	Adapter Assy.	Stud Kit	RIGHT Side PTO Model	Inter. Torq.	Dir. Rot.	Engine % Fwd.	Engine % Rev.	Filler Block	Adapter Assy.	Stud Kit
ONE SPEED - TWO GEAR - MECHANICAL SHIFT															
489KFAHX-*6 (3)	250	Opp	129		8-A-062 8-A-093	328170-8X		442KFAHX-*4 (3)	250	Eng	129		7-A-240(T)	328530-1X	328170-168X
489KHAHX-*6 (15)	250	Opp	150		8-A-062 8-A-093	328170-8X		442KHAHX-*4 (15)	250	Eng	150		7-A-240(T)	328530-1X	328170-168X
489KLAHX-*6 (2)	250	Opp	168		8-A-062 8-A-093	328170-8X		442KLAHX-*4 (2)	250	Eng	168		7-A-240(T)	328530-1X	328170-168X
489KQAHX-*6 (2)	225	Opp	180		8-A-062 8-A-093	328170-8X		442KQAHX-*4 (2)	225	Eng	180		7-A-240(T)	328530-1X	328170-168X
489KRAHX-*6 (2)	225	Opp	209		8-A-062 8-A-093	328170-8X		442KRAHX-*4 (2)	225	Eng	209		7-A-240(T)	328530-1X	328170-168X
489KSAHX-*6 (2)	200	Opp	249		8-A-062 8-A-093	328170-8X		442KSAHX-*4 (2)	200	Eng	249		7-A-240(T)	328530-1X	328170-168X
489KUAHX-*6 (2)	195	Opp	296		8-A-062 8-A-093	328170-8X		442KUAHX-*4 (2)	195	Eng	296		7-A-240(T)	328530-1X	328170-168X
489KWAHX-*6 (2)	175	Opp	349		8-A-062 8-A-093	328170-8X		442KWAHX-*4 (2)	175	Eng	349		7-A-240(T)	328530-1X	328170-168X
489KXAHX-*6 (2)	140	Opp	412		8-A-062 8-A-093	328170-8X		442KXAHX-*4 (2)	140	Eng	412		7-A-240(T)	328530-1X	328170-168X
680KHAHX-*6 (19)	375	Opp	150		8-A-062 8-A-093	328170-8X		660KHAHX-*4 (15)	375	Eng	150		7-A-240(T)	328530-1X	328170-168X
680XFAHX-*6 (12)	375	Opp	129		8-A-062 8-A-093	328170-8X									
680XQAHX-*6 (13)	375	Opp	180		8-A-062 8-A-093	328170-8X									
680XRAHX-*6 (17)	350	Opp	209		8-A-062 8-A-093	328170-8X									
680XSAHX-*6 (14)	325	Opp	249		8-A-062 8-A-093	328170-8X									
823XBAHX-*6 (21)	500	Opp	88		8-A-190	328170-14X									
823XDAHX-*6 (29)	500	Opp	104		8-A-190	328170-14X									
823XGAHX-*6 (30)	500	Opp	113		8-A-190	328170-14X									
823XJAHX-*6 (22)	500	Opp	133		8-A-190	328170-14X									

Continued Next Page

CAUTION: Do not use geared adapters with 442 "A" and "C" ratios.

CAUTION: 660/680 Series: Applications above 1500 RPM, contact Chelsea Technical Service for approval.

NOTE: All speeds shown are with the transmission in 5th speed. For PTO speeds with the main transmission in all others, multiply speed shown by the following: 1st - .116, 2nd - .200, 3rd - .353,4th - .603.

NOTE: The AK & XK output flanges can not be used with the "A" & "C" ratios on the 489 Series PTOs due to mounting stud interference. Use a RA or RB rotatable flange for the XK and the RA for the AK flange.

NOTE: The 812 Series PTO will not mount on this transmission because the output shaft interferes with the reverse idler buldge.

NOTE: 272/282 Series stated torque values on this page are for Intermittent and Continuous Duty Applications.

(2) Input Gear Part No. 5-P-1004
(3) Input Gear Part No. 5-P-1077
(12) Input Gear Part No. 5-P-1242
(13) Input Gear Part No. 5-P-1246
(14) Input Gear Part No. 5-P-1322
(15) Input Gear Part No. 5-P-1364
(17) Input Gear Part No. 5-P-1441
(19) Input Gear Part No. 5-P-1494
(21) Input Gear Part No. 5-P-285
(22) Input Gear Part No. 5-P-325
(29) Input Gear Part No. 5-P-971
(30) Input Gear Part No. 5-P-980

Parker Hannifin Corporation
Chelsea Products Division
Olive Branch, MS 38654 USA

D1070
G1070
TRDLG1070
TRDL1070
TRTXL1070
TRTXL1070-B
T1070
T1070-B

LEFT SIDE ONLY

TRANSMISSION GEAR DATA:
L.S. 08-BOLT Opening Gear REAR of Centerline
37 Teeth - SPUR

PITCH LINE TO APERTURE FACE:
0.3750" (9.5200MM)

RIGHT SIDE ONLY

TRANSMISSION GEAR DATA:
R.S. 06-BOLT Opening Gear REAR of Centerline
37 Teeth - SPUR

PITCH LINE TO APERTURE FACE:
2.8340" (71.9800MM)

Caution: Application Approval Required for PTO Output Shaft Speeds Above 2500 RPM

LEFT Side PTO Model	Inter. Torq.	Dir. Rot.	Engine % Fwd.	Engine % Rev.	Filler Block	Adapter Assy.	Stud Kit	RIGHT Side PTO Model	Inter. Torq.	Dir. Rot.	Engine % Fwd.	Engine % Rev.	Filler Block	Adapter Assy.	Stud Kit
ONE SPEED - TWO GEAR - MECHANICAL SHIFT															
823XMAHX-*6 (20)	500	Opp	157		8-A-190		328170-14X								
823XRAHX-*6 (26)	400	Opp	216		8-A-190		328170-14X								
880XBAHX-*6 (4)	500	Opp	88		8-A-190		328170-14X								
880XDAHX-*6 (5)	500	Opp	104		8-A-190		328170-14X								
880XGAHX-*6 (10)	500	Opp	113		8-A-190		328170-14X								
880XJAHX-*6 (6)	500	Opp	133		8-A-190		328170-14X								
880XMAHX-*6 (7)	500	Opp	157		8-A-190		328170-14X								
880XQAHX-*6 (16)	450	Opp	183		8-A-190		328170-14X								
880XRAHX-*6 (8)	400	Opp	216		8-A-190		328170-14X								
880XTAHX-*6 (9)	350	Opp	279		8-A-190		328170-14X								
ONE SPEED - TWO GEAR - POWERSHIFT (AIR)															
230XAAJX-*4 (23)	250	Opp	53		7-A-032	310778X	Furnished	236KAAHX-*4 (18)	250	Eng	90		7-A-240(T)	328530-1X	328170-168X
230XBAJX-*4 (1)	250	Opp	69		7-A-032	310778X	Furnished	236KDAHX-*4 (2)	250	Eng	136		7-A-240(T)	328530-1X	328170-168X
230XDAJX-*4 (25)	250	Opp	79		7-A-032	310778X	Furnished	236KKAHX-*4 (2)	250	Eng	174		7-A-240(T)	328530-1X	328170-168X
230XKAJX-*4 (27)	250	Opp	107		7-A-032	310778X	Furnished	236KQAHX-*4 (2)	250	Eng	234		7-A-240(T)	328530-1X	328170-168X
230XQAJX-*4 (28)	250	Opp	143		7-A-032	310778X	Furnished	236KUAHX-*4 (2)	225	Eng	268		7-A-240(T)	328530-1X	328170-168X
230XUAJX-*4 (11)	225	Opp	229		7-A-032	310778X	Furnished								
238KAAHX-*6 (18)	250	Opp	90		8-A-062 8-A-093		328170-8X								
238KDAHX-*6 (2)	250	Opp	136		8-A-062 8-A-093		328170-8X								
238KKAHX-*6 (2)	250	Opp	174		8-A-062 8-A-093		328170-8X								
238KQAHX-*6 (2)	250	Opp	234		8-A-062 8-A-093		328170-8X								
238KUAHX-*6 (2)	225	Opp	268		8-A-062 8-A-093		328170-8X								
885XGAHX-*6 (10)	500	Opp	113		8-A-190		328170-14X								
885XJAHX-*6 (6)	500	Opp	133		8-A-190		328170-14X								
885XMAHX-*6 (7)	500	Opp	157		8-A-190		328170-14X								

Continued Next Page

CAUTION: Do not use geared adapters with 442 "A" and "C" ratios.

CAUTION: 660/680 Series: Applications above 1500 RPM, contact Chelsea Technical Service for approval.

NOTE: All speeds shown are with the transmission in 5th speed. For PTO speeds with the main transmission in all others, multiply speed shown by the following: 1st - .116, 2nd - .200, 3rd - .353,4th - .603.

NOTE: The AK & XK output flanges can not be used with the "A" & "C" ratios on the 489 Series PTOs due to mounting stud interference. Use a RA or RB rotatable flange for the XK and the RA for the AK flange.

NOTE: The 812 Series PTO will not mount on this transmission because the output shaft interferes with the reverse idler buldge.

NOTE: 272/282 Series stated torque values on this page are for Intermittent and Continuous Duty Applications.

(1) Input Gear Part No. 5-P--P-568
(2) Input Gear Part No. 5-P-1004
(4) Input Gear Part No. 5-P-1100
(5) Input Gear Part No. 5-P-1101
(6) Input Gear Part No. 5-P-1102
(7) Input Gear Part No. 5-P-1103
(8) Input Gear Part No. 5-P-1104
(9) Input Gear Part No. 5-P-1105
(10) Input Gear Part No. 5-P-1135
(11) Input Gear Part No. 5-P-1144
(16) Input Gear Part No. 5-P-1385
(18) Input Gear Part No. 5-P-1486
(20) Input Gear Part No. 5-P-283
(23) Input Gear Part No. 5-P-567
(25) Input Gear Part No. 5-P-695
(26) Input Gear Part No. 5-P-721
(27) Input Gear Part No. 5-P-769
(28) Input Gear Part No. 5-P-770

Parker Hannifin Corporation
Chelsea Products Division
Olive Branch, MS 38654 USA

D1070
G1070
TRDLG1070
TRDL1070
TRTXL1070
TRTXL1070-B
T1070
T1070-B

LEFT SIDE ONLY

TRANSMISSION GEAR DATA:
L.S. 08-BOLT Opening Gear REAR of Centerline
37 Teeth - SPUR

PITCH LINE TO APERTURE FACE:
0.3750" (9.5200MM)

RIGHT SIDE ONLY

TRANSMISSION GEAR DATA:
R.S. 06-BOLT Opening Gear REAR of Centerline
37 Teeth - SPUR

PITCH LINE TO APERTURE FACE:
2.8340" (71.9800MM)

Caution: Application Approval Required for PTO Output Shaft Speeds Above 2500 RPM

LEFT Side PTO Model	Inter. Torq.	Dir. Rot.	Engine % Fwd.	Engine % Rev.	Filler Block	Adapter Assy.	Stud Kit	RIGHT Side PTO Model	Inter. Torq.	Dir. Rot.	Engine % Fwd.	Engine % Rev.	Filler Block	Adapter Assy.	Stud Kit
ONE SPEED - FORWARD & REVERSE															
348XFAHX-*4 (24)	200	Opp	113	119	8-A-190(T)		328170-8X	340XFAHX-*4 (24)	200	Eng	113	119	7-A-140(P)(31) 7-A-240(T)	328530-1X	328170-168X
352XSAHX-*6 (2)	140	Opp	252	326		328564X	Furnished	352XSAHX-*4 (2)	140	Eng	252	326	7-A-240(T)	328530-1X	328170-168X
863XBAHX-*4	500	Opp	88	109	8-A-190		328170-15X								
GEARED ADAPTERS															
628XAHX-3AH	250	Eng	0		8-A-190		328170-8X								

CAUTION: Do not use geared adapters with 442 "A" and "C" ratios.

CAUTION: 660/680 Series: Applications above 1500 RPM, contact Chelsea Technical Service for approval.

NOTE: All speeds shown are with the transmission in 5th speed. For PTO speeds with the main transmission in all others, multiply speed shown by the following: 1st - .116, 2nd - .200, 3rd - .353,4th - .603.

NOTE: The AK & XK output flanges can not be used with the "A" & "C" ratios on the 489 Series PTOs due to mounting stud interference. Use a RA or RB rotatable flange for the XK and the RA for the AK flange.

NOTE: The 812 Series PTO will not mount on this transmission because the output shaft interferes with the reverse idler buldge.

NOTE: 272/282 Series stated torque values on this page are for Intermittent and Continuous Duty Applications.

(2) Input Gear Part No. 5-P-1004
(24) Input Gear Part No. 5-P-581
(31) Filler block furnished with P.T.O.

Parker Hannifin Corporation
Chelsea Products Division
Olive Branch, MS 38654 USA

TRL10760
TRL10780

LEFT SIDE ONLY

TRANSMISSION GEAR DATA:
L.S. 08-BOLT Opening Gear FORWARD of Centerline
34 Teeth - SPUR

PITCH LINE TO APERTURE FACE:
0.8050" (20.4500MM)

RIGHT SIDE ONLY

TRANSMISSION GEAR DATA:
R.S. 06-BOLT Opening Gear FORWARD of Centerline
34 Teeth - SPUR

PITCH LINE TO APERTURE FACE:
3.0850" (78.3600MM)

Caution: Application Approval Required for PTO Output Shaft Speeds Above 2500 RPM

LEFT Side PTO Model	Inter. Torq.	Dir. Rot.	Engine % Fwd.	Engine % Rev.	Filler Block	Adapter Assy.	Stud Kit	RIGHT Side PTO Model	Inter. Torq.	Dir. Rot.	Engine % Fwd.	Engine % Rev.	Filler Block	Adapter Assy.	Stud Kit
ONE SPEED - TWO GEAR - MECHANICAL SHIFT															
489XAAHX-*5 (12)	250	Opp	46				Furnished	442KFAHX-*3 (2)	250	Eng	73			328530-1X	7170-16X
489XCAHX-*5 (13)	250	Opp	59				Furnished	442KHAHX-*3 (15)	250	Eng	85			328530-1X	7170-16X
489XFAHX-*5 (2)	250	Opp	73				Furnished	442KLAHX-*3 (1)	250	Eng	95			328530-1X	7170-16X
489XHAHX-*5 (15)	250	Opp	85				Furnished	442KQAHX-*3 (1)	225	Eng	102			328530-1X	7170-16X
489XLAHX-*5 (1)	250	Opp	95				Furnished	442KRAHX-*3 (1)	225	Eng	119			328530-1X	7170-16X
489XQAHX-*5 (1)	225	Opp	102				Furnished	442KSAHX-*3 (1)	200	Eng	141			328530-1X	7170-16X
489XRAHX-*5 (1)	225	Opp	119				Furnished	442KUAHX-*3 (1)	195	Eng	168			328530-1X	7170-16X
489XSAHX-*5 (1)	200	Opp	141				Furnished	442KWAHX-*3 (1)	175	Eng	198			328530-1X	7170-16X
489XUAHX-*5 (1)	195	Opp	168				Furnished	442KXAHX-*3 (1)	140	Eng	234			328530-1X	7170-16X
489XWAHX-*5 (1)	175	Opp	198				Furnished	660KHAHX-*3 (15)	375	Eng	85			328530-1X	7170-16X
489XXAHX-*5 (1)	140	Opp	234				Furnished								
680XFAHX-*5 (10)	375	Opp	73				Furnished								
680XHAHX-*5 (20)	375	Opp	85				Furnished								
680XQAHX-*5 (11)	375	Opp	102				Furnished								
680XRAHX-*5 (18)	350	Opp	119				Furnished								
680XSAHX-*5 (14)	325	Opp	141				Furnished								
823XBAHX-*3 (22)	500	Opp	50				Furnished								
823XDAHX-*3 (26)	500	Opp	60				Furnished								
823XGAHX-*3 (27)	500	Opp	65				Furnished								
823XJAHX-*3 (23)	500	Opp	76				Furnished								
823XMAHX-*3 (21)	500	Opp	89				Furnished								
823XRAHX-*3 (25)	400	Opp	123				Furnished								
823XTKTX-*5 (17)	350	Opp	149		8-A-165(28)		Furnished								
880XBAHX-*5 (3)	500	Opp	50				Furnished								
880XDAHX-*5 (4)	500	Opp	59				Furnished								
880XGAHX-*5 (9)	500	Opp	64				Furnished								
880XJAHX-*5 (5)	500	Opp	76				Furnished								
880XMAHX-*5 (6)	500	Opp	89				Furnished								
880XQAHX-*5 (16)	450	Opp	104				Furnished								
880XRAHX-*5 (7)	400	Opp	123				Furnished								
880XTAHX-*5 (8)	350	Opp	158				Furnished								

Continued Next Page

CAUTION: Do not use geared adapters with 442 "A" and "C" ratios.

CAUTION: 660/680 Series: Applications above 1500 RPM, contact Chelsea Technical Service for approval.

NOTE: The AK & XK output flanges can not be used with the "A" & "C" ratios on the 489 Series PTOs due to mounting stud interference. Use a RA or RB rotatable flange for the XK and the RA for the AK flange.

NOTE: 272/282 Series stated torque values on this page are for Intermittent and Continuous Duty Applications.

(1) Input Gear Part No. 5-P-1004
(2) Input Gear Part No. 5-P-1077
(3) Input Gear Part No. 5-P-1100
(4) Input Gear Part No. 5-P-1101
(5) Input Gear Part No. 5-P-1102
(6) Input Gear Part No. 5-P-1103
(7) Input Gear Part No. 5-P-1104
(8) Input Gear Part No. 5-P-1105
(9) Input Gear Part No. 5-P-1135
(10) Input Gear Part No. 5-P-1242
(11) Input Gear Part No. 5-P-1246
(12) Input Gear Part No. 5-P-1280
(13) Input Gear Part No. 5-P-1287
(14) Input Gear Part No. 5-P-1322
(15) Input Gear Part No. 5-P-1364
(16) Input Gear Part No. 5-P-1385
(17) Input Gear Part No. 5-P-1395
(18) Input Gear Part No. 5-P-1441
(20) Input Gear Part No. 5-P-1494
(21) Input Gear Part No. 5-P-283
(22) Input Gear Part No. 5-P-285
(23) Input Gear Part No. 5-P-325
(25) Input Gear Part No. 5-P-721
(26) Input Gear Part No. 5-P-971
(27) Input Gear Part No. 5-P-980
(28) Filler block furnished with P.T.O.

Parker Hannifin Corporation
Chelsea Products Division
Olive Branch, MS 38654 USA

TRL10760
TRL10780

LEFT SIDE ONLY

TRANSMISSION GEAR DATA:
L.S. 08-BOLT Opening Gear FORWARD of Centerline
34 Teeth - SPUR

PITCH LINE TO APERTURE FACE:
0.8050" (20.4500MM)

RIGHT SIDE ONLY

TRANSMISSION GEAR DATA:
R.S. 06-BOLT Opening Gear FORWARD of Centerline
34 Teeth - SPUR

PITCH LINE TO APERTURE FACE:
3.0850" (78.3600MM)

Caution: Application Approval Required for PTO Output Shaft Speeds Above 2500 RPM

LEFT Side PTO Model	Inter. Torq.	Dir. Rot.	Engine % Fwd.	Engine % Rev.	Filler Block	Adapter Assy.	Stud Kit	RIGHT Side PTO Model	Inter. Torq.	Dir. Rot.	Engine % Fwd.	Engine % Rev.	Filler Block	Adapter Assy.	Stud Kit
ONE SPEED - TWO GEAR POWERSHIFT (AIR OR HYDRAULIC)															
282XBAJX-*5	300	Opp	50				Furnished	272KAAJX-*3	300	Eng	41			328530-1X	7170-16X
282XCAJX-*5	300	Opp	61				Furnished	272KBAJX-*3	300	Eng	50			328530-1X	7170-16X
282XDAJX-*5	300	Opp	72				Furnished	272KCAJX-*3	300	Eng	61			328530-1X	7170-16X
282XGAJX-*5	300	Opp	86				Furnished	272KDAJX-*3	300	Eng	72			328530-1X	7170-16X
282XKAJX-*5	300	Opp	96				Furnished	272KGAJX-*3	300	Eng	86			328530-1X	7170-16X
282XMAJX-*5	300	Opp	108				Furnished	272KKAJX-*3	300	Eng	96			328530-1X	7170-16X
282XPAJX-*5	300	Opp	120				Furnished	272KMAJX-*3	300	Eng	108			328530-1X	7170-16X
282XSAJX-*5	300	Opp	135				Furnished	272KPAJX-*3	300	Eng	120			328530-1X	7170-16X
282XTAJX-*5	300	Opp	151				Furnished	272KSAJX-*3	300	Eng	135			328530-1X	7170-16X
ONE SPEED - TWO GEAR - POWERSHIFT (AIR)															
230XAAJX-*3	250	Opp	39			328481X	Furnished	236KAAHX-*3 (19)	250	Eng	51			328530-1X	7170-16X
230XBAJX-*3	250	Opp	50			328481X	Furnished	236KDAHX-*3 (1)	250	Eng	77			328530-1X	7170-16X
230XDAJX-*3	250	Opp	58			328481X	Furnished	236KKAHX-*3 (1)	250	Eng	99			328530-1X	7170-16X
230XKAJX-*3	250	Opp	79			328481X	Furnished	236KQAHX-*3 (1)	250	Eng	133			328530-1X	7170-16X
230XQAJX-*3	250	Opp	105			328481X	Furnished	236KUAHX-*3 (1)	225	Eng	152			328530-1X	7170-16X
230XUAJX-*3	225	Opp	167			328481X	Furnished								
238XAAHX-*5 (19)	250	Opp	51				Furnished								
238XDAHX-*5 (1)	250	Opp	77				Furnished								
238XKAHX-*5 (1)	250	Opp	99				Furnished								
238XQAHX-*5 (1)	250	Opp	133				Furnished								
238XUAHX-*5 (1)	225	Opp	152				Furnished								
885XBAHX-*3 (3)	500	Opp	50				Furnished								
885XGAHX-*5 (9)	500	Opp	64				Furnished								
885XJAHX-*3 (5)	500	Opp	76				Furnished								
885XMAHX-*3 (6)	500	Opp	89				Furnished								
ONE SPEED - FORWARD & REVERSE															
340SFAHX-*5 (24)	200	Opp	64	67		310778X	Furnished	340XFAHX-*5 (24)	200	Eng	64	67	7-A-140(P)(28)	328530-1X	7170-16X
352ZSAHX-*5 (1)	140	Opp	143	185		328564X	Furnished	352XSAHX-*3 (1)	140	Eng	143	185		328530-1X	7170-16X
863XBAHX-*5	500	Opp	50	62			Furnished								

Continued Next Page

CAUTION: Do not use geared adapters with 442 "A" and "C" ratios.

CAUTION: 660/680 Series: Applications above 1500 RPM, contact Chelsea Technical Service for approval.

NOTE: The AK & XK output flanges can not be used with the "A" & "C" ratios on the 489 Series PTOs due to mounting stud interference. Use a RA or RB rotatable flange for the XK and the RA for the AK flange.

NOTE: 272/282 Series stated torque values on this page are for Intermittent and Continuous Duty Applications.

(1) Input Gear Part No. 5-P-1004
(3) Input Gear Part No. 5-P-1100
(5) Input Gear Part No. 5-P-1102
(6) Input Gear Part No. 5-P-1103
(9) Input Gear Part No. 5-P-1135
(19) Input Gear Part No. 5-P-1486
(24) Input Gear Part No. 5-P-581
(28) Filler block furnished with P.T.O.

Parker Hannifin Corporation
Chelsea Products Division
Olive Branch, MS 38654 USA

TRL10760
TRL10780

LEFT SIDE ONLY

TRANSMISSION GEAR DATA:
L.S. 08-BOLT Opening Gear FORWARD of Centerline
34 Teeth - SPUR

PITCH LINE TO APERTURE FACE:
0.8050" (20.4500MM)

RIGHT SIDE ONLY

TRANSMISSION GEAR DATA:
R.S. 06-BOLT Opening Gear FORWARD of Centerline
34 Teeth - SPUR

PITCH LINE TO APERTURE FACE:
3.0850" (78.3600MM)

Caution: Application Approval Required for PTO Output Shaft Speeds Above 2500 RPM

LEFT Side PTO Model	Inter. Torq.	Dir. Rot.	Engine %		Filler Block	Adapter Assy.	Stud Kit	RIGHT Side PTO Model	Inter. Torq.	Dir. Rot.	Engine %		Filler Block	Adapter Assy.	Stud Kit
			Fwd.	Rev.							Fwd.	Rev.			

GEARED ADAPTERS

628XAHX-4AH	250	Eng	0			Furnished

CAUTION: Do not use geared adapters with 442 "A" and "C" ratios.

CAUTION: 660/680 Series: Applications above 1500 RPM, contact Chelsea Technical Service for approval.

NOTE: The AK & XK output flanges can not be used with the "A" & "C" ratios on the 489 Series PTOs due to mounting stud interference. Use a RA or RB rotatable flange for the XK and the RA for the AK flange.

NOTE: 272/282 Series stated torque values on this page are for Intermittent and Continuous Duty Applications.

Parker Hannifin Corporation
Chelsea Products Division
Olive Branch, MS 38654 USA

TRXL1070
TRXL1070-A
TRXL10710
X1070
X1070-A
X10710
X10710-A

LEFT SIDE ONLY

TRANSMISSION GEAR DATA:
L.S. 08-BOLT Opening Gear FORWARD of Centerline
37 Teeth - SPUR

PITCH LINE TO APERTURE FACE:
0.5700" (14.4800MM)

RIGHT SIDE ONLY

TRANSMISSION GEAR DATA:
R.S. 06-BOLT Opening Gear FORWARD of Centerline
37 Teeth - SPUR

PITCH LINE TO APERTURE FACE:
2.8340" (71.9800MM)

Caution: Application Approval Required for PTO Output Shaft Speeds Above 2500 RPM

LEFT Side PTO Model	Inter. Torq.	Dir. Rot.	Engine % Fwd.	Engine % Rev.	Filler Block	Adapter Assy.	Stud Kit	RIGHT Side PTO Model	Inter. Torq.	Dir. Rot.	Engine % Fwd.	Engine % Rev.	Filler Block	Adapter Assy.	Stud Kit
ONE SPEED - TWO GEAR - MECHANICAL SHIFT															
221XCAHX-*5	250	Opp	72		7-A-032(P)(27)	328564X	Furnished	221XCAHX-*3	250	Eng	72		7-A-032(P)(27) 7-A-240(T)	328530-1X	328170-32X
221XEAHX-*5	250	Opp	84			328564X	Furnished	221XEAHX-*3	250	Eng	84		7-A-240(T)	328530-1X	328170-32X
221XLAHX-*5	200	Opp	112			328564X	Furnished	221XLAHX-*3	200	Eng	112		7-A-240(T)	328530-1X	328170-32X
221XPAHX-*5	200	Opp	136			328564X	Furnished	221XPAHX-*3	200	Eng	136		7-A-240(T)	328530-1X	328170-32X
489KAAHX-*5 (12)	250	Opp	64		8-A-062 8-A-093		328170-8X	442KFAHX-*3 (2)	250	Eng	101		7-A-240(T)	328530-1X	328170-168X
489KCAHX-*5 (13)	250	Opp	81		8-A-062 8-A-093		328170-8X	442KHAHX-*3 (15)	250	Eng	117		7-A-240(T)	328530-1X	328170-168X
489KFAHX-*5 (2)	250	Opp	101		8-A-062 8-A-093		328170-8X	442KLAHX-*3 (1)	250	Eng	130		7-A-240(T)	328530-1X	328170-168X
489KHAHX-*5 (15)	250	Opp	117		8-A-062 8-A-093		328170-8X	442KQAHX-*3 (1)	225	Eng	140		7-A-240(T)	328530-1X	328170-168X
489KLAHX-*5 (1)	250	Opp	130		8-A-062 8-A-093		328170-8X	442KRAHX-*3 (1)	225	Eng	162		7-A-240(T)	328530-1X	328170-168X
489KQAHX-*5 (1)	225	Opp	140		8-A-062 8-A-093		328170-8X	442KSAHX-*3 (1)	200	Eng	193		7-A-240(T)	328530-1X	328170-168X
489KRAHX-*5 (1)	225	Opp	162		8-A-062 8-A-093		328170-8X	442KUAHX-*3 (1)	195	Eng	230		7-A-240(T)	328530-1X	328170-168X
489KSAHX-*5 (1)	200	Opp	193		8-A-062 8-A-093		328170-8X	442KWAHX-*3 (1)	175	Eng	271		7-A-240(T)	328530-1X	328170-168X
489KUAHX-*5 (1)	195	Opp	230		8-A-062 8-A-093		328170-8X	442KXAHX-*3 (1)	140	Eng	321		7-A-240(T)	328530-1X	328170-168X
489KWAHX-*5 (1)	175	Opp	271		8-A-062 8-A-093		328170-8X	660KHAHX-*3 (15)	375	Eng	117		7-A-240(T)	328530-1X	328170-168X
489KXAHX-*5 (1)	140	Opp	321		8-A-062 8-A-093		328170-8X								
680KHAHX-*5 (19)	375	Opp	117		8-A-062 8-A-093		328170-8X								
680XFAHX-*5 (10)	375	Opp	101		8-A-062 8-A-093		328170-8X								

Continued Next Page

CAUTION: Do not use geared adapters with 442 "A" and "C" ratios.

CAUTION: 660/680 Series: Applications above 1500 RPM, contact Chelsea Technical Service for approval.

NOTE: All speeds figured with transmission in 4th speed direct. For PTO speeds in other transmission gears, multiply speeds shown by following: 1st. = .1907, 2nd. = .3282, 3rd. = .5780, 5th. = 1.6744.

NOTE: 489 Series-the AK & XK output flanges can not be used with the "A" & "C" ratios due to mounting stud interference. Use a RA or RB rotatable flange for the XK and the RA for the AK flange.

NOTE: 272/282 Series stated torque values on this page are for Intermittent and Continuous Duty Applications.

(1) Input Gear Part No. 5-P-1004
(2) Input Gear Part No. 5-P-1077
(10) Input Gear Part No. 5-P-1242
(12) Input Gear Part No. 5-P-1280
(13) Input Gear Part No. 5-P-1287
(15) Input Gear Part No. 5-P-1364
(19) Input Gear Part No. 5-P-1494
(27) Filler block furnished with P.T.O.

Parker Hannifin Corporation
Chelsea Products Division
Olive Branch, MS 38654 USA

TRXL1070
TRXL1070-A
TRXL10710
X1070
X1070-A
X10710
X10710-A

LEFT SIDE ONLY

TRANSMISSION GEAR DATA:
L.S. 08-BOLT Opening Gear FORWARD of Centerline
37 Teeth - SPUR

PITCH LINE TO APERTURE FACE:
0.5700" (14.4800MM)

RIGHT SIDE ONLY

TRANSMISSION GEAR DATA:
R.S. 06-BOLT Opening Gear FORWARD of Centerline
37 Teeth - SPUR

PITCH LINE TO APERTURE FACE:
2.8340" (71.9800MM)

Caution: Application Approval Required for PTO Output Shaft Speeds Above 2500 RPM

LEFT Side PTO Model	Inter. Torq.	Dir. Rot.	Engine % Fwd.	Engine % Rev.	Filler Block	Adapter Assy.	Stud Kit	RIGHT Side PTO Model	Inter. Torq.	Dir. Rot.	Engine % Fwd.	Engine % Rev.	Filler Block	Adapter Assy.	Stud Kit
ONE SPEED - TWO GEAR - MECHANICAL SHIFT															
680XQAHX-*5 (11)	375	Opp	140		8-A-062 8-A-093	328170-8X									
680XRAHX-*5 (17)	350	Opp	162		8-A-062 8-A-093	328170-8X									
680XSAHX-*5 (14)	325	Opp	193		8-A-062 8-A-093	328170-8X									
823XBAHX-*3 (21)	500	Opp	69		8-A-190	328170-14X									
823XDAHX-*3 (25)	500	Opp	81		8-A-190	328170-14X									
823XGAHX-*3 (26)	500	Opp	88		8-A-190	328170-14X									
823XJAHX-*3 (22)	500	Opp	104		8-A-190	328170-14X									
823XMAHX-*3 (20)	500	Opp	122		8-A-190	328170-14X									
823XRAHX-*3 (24)	400	Opp	168		8-A-190	328170-14X									
880XBAHX-*3 (3)	500	Opp	69		8-A-190	328170-14X									
880XDAHX-*3 (4)	500	Opp	81		8-A-190	328170-14X									
880XGAHX-*3 (9)	500	Opp	88		8-A-190	328170-14X									
880XJAHX-*3 (5)	500	Opp	104		8-A-190	328170-14X									
880XMAHX-*3 (6)	500	Opp	122		8-A-190	328170-14X									
880XQAHX-*3 (16)	450	Opp	142		8-A-190	328170-14X									
880XRAHX-*3 (7)	400	Opp	168		8-A-190	328170-14X									
880XTAHX-*3 (8)	350	Opp	217		8-A-190	328170-14X									
ONE SPEED - TWO GEAR POWERSHIFT (AIR OR HYDRAULIC)															
282KBAJX-*5	300	Opp	69		8-A-062(T) 8-A-093	328170-8X		272KAAJX-*3	300	Eng	56		7-A-240(T)	328530-1X	328170-168X
282KCAJX-*5	300	Opp	83		8-A-062(T) 8-A-093	328170-8X		272KBAJX-*3	300	Eng	69		7-A-240(T)	328530-1X	328170-168X
282KDAJX-*5	300	Opp	99		8-A-062(T) 8-A-093	328170-8X		272KCAJX-*3	300	Eng	83		7-A-240(T)	328530-1X	328170-168X
282KGAJX-*5	300	Opp	118		8-A-062(T) 8-A-093	328170-8X		272KDAJX-*3	300	Eng	99		7-A-240(T)	328530-1X	328170-168X
282KKAJX-*5	300	Opp	132		8-A-062(T) 8-A-093	328170-8X		272KGAJX-*3	300	Eng	118		7-A-240(T)	328530-1X	328170-168X

Continued Next Page

CAUTION: Do not use geared adapters with 442 "A" and "C" ratios.

CAUTION: 660/680 Series: Applications above 1500 RPM, contact Chelsea Technical Service for approval.

NOTE: All speeds figured with transmission in 4th speed direct. For PTO speeds in other transmission gears, multiply speeds shown by following: 1st. = .1907, 2nd. = .3282, 3rd. = .5780, 5th. = 1.6744.

NOTE: 489 Series-the AK & XK output flanges can not be used with the "A" & "C" ratios due to mounting stud interference. Use a RA or RB rotatable flange for the XK and the RA for the AK flange.

NOTE: 272/282 Series stated torque values on this page are for Intermittent and Continuous Duty Applications.

(3) Input Gear Part No. 5-P-1100
(4) Input Gear Part No. 5-P-1101
(5) Input Gear Part No. 5-P-1102
(6) Input Gear Part No. 5-P-1103
(7) Input Gear Part No. 5-P-1104
(8) Input Gear Part No. 5-P-1105
(9) Input Gear Part No. 5-P-1135
(11) Input Gear Part No. 5-P-1246
(14) Input Gear Part No. 5-P-1322
(16) Input Gear Part No. 5-P-1385
(17) Input Gear Part No. 5-P-1441
(20) Input Gear Part No. 5-P-283
(21) Input Gear Part No. 5-P-285
(22) Input Gear Part No. 5-P-325
(24) Input Gear Part No. 5-P-721
(25) Input Gear Part No. 5-P-971
(26) Input Gear Part No. 5-P-980

Parker Hannifin Corporation
Chelsea Products Division
Olive Branch, MS 38654 USA

TRXL1070
TRXL1070-A
TRXL10710
X1070
X1070-A
X10710
X10710-A

LEFT SIDE ONLY

TRANSMISSION GEAR DATA:
L.S. 08-BOLT Opening Gear FORWARD of Centerline
37 Teeth - SPUR

PITCH LINE TO APERTURE FACE:
0.5700" (14.4800MM)

RIGHT SIDE ONLY

TRANSMISSION GEAR DATA:
R.S. 06-BOLT Opening Gear FORWARD of Centerline
37 Teeth - SPUR

PITCH LINE TO APERTURE FACE:
2.8340" (71.9800MM)

Caution: Application Approval Required for PTO Output Shaft Speeds Above 2500 RPM

LEFT Side PTO Model	Inter. Torq.	Dir. Rot.	Engine % Fwd.	Engine % Rev.	Filler Block	Adapter Assy.	Stud Kit	RIGHT Side PTO Model	Inter. Torq.	Dir. Rot.	Engine % Fwd.	Engine % Rev.	Filler Block	Adapter Assy.	Stud Kit
ONE SPEED - TWO GEAR POWERSHIFT (AIR OR HYDRAULIC)															
282KMAJX-*5	300	Opp	148		8-A-062(T) 8-A-093		328170-8X	272KKAJX-*3	300	Eng	132		7-A-240(T)	328530-1X	328170-168X
282KPAJX-*5	300	Opp	165		8-A-062(T) 8-A-093		328170-8X	272KMAJX-*3	300	Eng	148		7-A-240(T)	328530-1X	328170-168X
282KSAJX-*5	271	Opp	184		8-A-062(T) 8-A-093		328170-8X	272KPAJX-*3	300	Eng	165		7-A-240(T)	328530-1X	328170-168X
282KTAJX-*5	242	Opp	206		8-A-062(T) 8-A-093		328170-8X	272KSAJX-*3	271	Eng	184		7-A-240(T)	328530-1X	328170-168X
ONE SPEED - TWO GEAR - POWERSHIFT (AIR)															
230XAAJX-*5	250	Opp	53		7-A-032(P)	310778X	Furnished	236KAAHX-*3 (18)	250	Eng	70		7-A-240(T)	328530-1X	328170-168X
230XBAJX-*5	250	Opp	69		7-A-032(P)	310778X	Furnished	236KDAHX-*3 (1)	250	Eng	105		7-A-240(T)	328530-1X	328170-168X
230XDAJX-*5	250	Opp	80		7-A-032(P)	310778X	Furnished	236KKAHX-*3 (1)	250	Eng	135		7-A-240(T)	328530-1X	328170-168X
230XKAJX-*5	250	Opp	108		7-A-032(P)	310778X	Furnished	236KQAHX-*3 (1)	250	Eng	182		7-A-240(T)	328530-1X	328170-168X
230XQAJX-*5	250	Opp	143		7-A-032(P)	310778X	Furnished	236KUAHX-*3 (1)	225	Eng	209		7-A-240(T)	328530-1X	328170-168X
230XUAJX-*5	225	Opp	229		7-A-032(P)	310778X	Furnished								
238KAAHX-*5 (18)	250	Opp	70		8-A-062(T) 8-A-093		328170-8X								
238KDAHX-*5 (1)	250	Opp	105		8-A-062(T) 8-A-093		328170-8X								
238KKAHX-*5 (1)	250	Opp	135		8-A-062(T) 8-A-093		328170-8X								
238KQAHX-*5 (1)	250	Opp	182		8-A-062(T) 8-A-093		328170-8X								
238KUAHX-*5 (1)	225	Opp	209		8-A-062(T) 8-A-093		328170-8X								
885XBAHX-*3 (3)	500	Opp	69		8-A-190		328170-14X								
885XGAHX-*3 (9)	500	Opp	88		8-A-190		328170-14X								
885XJAHX-*3 (5)	500	Opp	104		8-A-190		328170-14X								
885XMAHX-*3 (6)	500	Opp	122		8-A-190		328170-14X								

Continued Next Page

CAUTION: Do not use geared adapters with 442 "A" and "C" ratios.

CAUTION: 660/680 Series: Applications above 1500 RPM, contact Chelsea Technical Service for approval.

NOTE: All speeds figured with transmission in 4th speed direct. For PTO speeds in other transmission gears, multiply speeds shown by following: 1st. = .1907, 2nd. = .3282, 3rd. = .5780, 5th. = 1.6744.

NOTE: 489 Series-the AK & XK output flanges can not be used with the "A" & "C" ratios due to mounting stud interference. Use a RA or RB rotatable flange for the XK and the RA for the AK flange.

NOTE: 272/282 Series stated torque values on this page are for Intermittent and Continuous Duty Applications.

(1) Input Gear Part No. 5-P-1004
(3) Input Gear Part No. 5-P-1100
(5) Input Gear Part No. 5-P-1102
(6) Input Gear Part No. 5-P-1103
(9) Input Gear Part No. 5-P-1135
(18) Input Gear Part No. 5-P-1486

Parker Hannifin Corporation
Chelsea Products Division
Olive Branch, MS 38654 USA

TRXL1070
TRXL1070-A
TRXL10710
X1070
X1070-A
X10710
X10710-A

LEFT SIDE ONLY

TRANSMISSION GEAR DATA:
L.S. 08-BOLT Opening Gear FORWARD of Centerline
37 Teeth - SPUR

PITCH LINE TO APERTURE FACE:
0.5700" (14.4800MM)

RIGHT SIDE ONLY

TRANSMISSION GEAR DATA:
R.S. 06-BOLT Opening Gear FORWARD of Centerline
37 Teeth - SPUR

PITCH LINE TO APERTURE FACE:
2.8340" (71.9800MM)

Caution: Application Approval Required for PTO Output Shaft Speeds Above 2500 RPM

LEFT Side PTO Model	Inter. Torq.	Dir. Rot.	Engine % Fwd.	Engine % Rev.	Filler Block	Adapter Assy.	Stud Kit	RIGHT Side PTO Model	Inter. Torq.	Dir. Rot.	Engine % Fwd.	Engine % Rev.	Filler Block	Adapter Assy.	Stud Kit
ONE SPEED - FORWARD & REVERSE															
340XFAHX-*5 (23)	200	Opp	88	92	7-A-140(P)(27)	328564X	Furnished	340XFAHX-*5 (23)	200	Eng	88	92	7-A-140(P)(27) 7-A-240(T)	328530-1X	328170-168X
352XSAHX-*5 (1)	140	Opp	196	254		328564X	Furnished	352XSAHX-*3 (1)	140	Eng	196	254	7-A-240(T)	328530-1X	328170-168X
863XBAHX-*5	500	Opp	69	85	8-A-190		328170-15X								
GEARED ADAPTERS															
628XAHX-4AH	250	Eng	0		8-A-190		328170-8X								

CAUTION: Do not use geared adapters with 442 "A" and "C" ratios.

CAUTION: 660/680 Series: Applications above 1500 RPM, contact Chelsea Technical Service for approval.

NOTE: All speeds figured with transmission in 4th speed direct. For PTO speeds in other transmission gears, multiply speeds shown by following: 1st. = .1907, 2nd. = .3282, 3rd. = .5780, 5th. = 1.6744.

NOTE: 489 Series-the AK & XK output flanges can not be used with the "A" & "C" ratios due to mounting stud interference. Use a RA or RB rotatable flange for the XK and the RA for the AK flange.

NOTE: 272/282 Series stated torque values on this page are for Intermittent and Continuous Duty Applications.

(1) Input Gear Part No. 5-P-1004
(23) Input Gear Part No. 5-P-581
(27) Filler block furnished with P.T.O.

Parker Hannifin Corporation
Chelsea Products Division
Olive Branch, MS 38654 USA

TRL107

LEFT SIDE ONLY

TRANSMISSION GEAR DATA:
L.S. 08-BOLT Opening Gear FORWARD of Centerline
34 Teeth - SPUR

PITCH LINE TO APERTURE FACE:
0.6250" (15.8800MM)

RIGHT SIDE ONLY

TRANSMISSION GEAR DATA:
R.S. 06-BOLT Opening Gear FORWARD of Centerline
34 Teeth - SPUR

PITCH LINE TO APERTURE FACE:
3.0850" (78.3600MM)

Caution: Application Approval Required for PTO Output Shaft Speeds Above 2500 RPM

ONE SPEED - TWO GEAR - MECHANICAL SHIFT

LEFT Side PTO Model	Inter. Torq.	Dir. Rot.	Engine % Fwd.	Engine % Rev.	Filler Block	Adapter Assy.	Stud Kit	RIGHT Side PTO Model	Inter. Torq.	Dir. Rot.	Engine % Fwd.	Engine % Rev.	Filler Block	Adapter Assy.	Stud Kit
221ZCAHX-*5	250	Opp	32		7-A-032(P)(26)	328564X	Furnished	221XCAHX-*3	250	Eng	32		7-A-032(P)(26)	328530-1X	328170-83X
221ZEAHX-*5	250	Opp	37			328564X	Furnished	221XEAHX-*3	250	Eng	37			328530-1X	328170-83X
221ZLAHX-*5	200	Opp	50			328564X	Furnished	221XLAHX-*3	200	Eng	50			328530-1X	328170-83X
221ZPAHX-*5	200	Opp	60			328564X	Furnished	221XPAHX-*3	200	Eng	60			328530-1X	328170-83X
489XAAHX-*5 (10)	250	Opp	28				Furnished	442KFAHX-*3 (2)	250	Eng	45			328530-1X	7170-16X
489XCAHX-*5 (11)	250	Opp	36				Furnished	442KHAHX-*3 (13)	250	Eng	72			328530-1X	7170-16X
489XFAHX-*5 (2)	250	Opp	45				Furnished	442KLAHX-*3 (1)	250	Eng	58			328530-1X	7170-16X
489XHAHX-*5 (13)	250	Opp	72				Furnished	442KQAHX-*3 (1)	225	Eng	62			328530-1X	7170-16X
489XLAHX-*5 (1)	250	Opp	58				Furnished	442KRAHX-*3 (1)	225	Eng	72			328530-1X	7170-16X
489XQAHX-*5 (1)	225	Opp	62				Furnished	442KSAHX-*3 (1)	200	Eng	86			328530-1X	7170-16X
489XRAHX-*5 (1)	225	Opp	72				Furnished	442KUAHX-*3 (1)	195	Eng	102			328530-1X	7170-16X
489XSAHX-*5 (1)	200	Opp	86				Furnished	442KWAHX-*3 (1)	175	Eng	121			328530-1X	7170-16X
489XUAHX-*5 (1)	195	Opp	102				Furnished	442KXAHX-*3 (1)	140	Eng	143			328530-1X	7170-16X
489XWAHX-*5 (1)	175	Opp	121				Furnished	660KHAHX-*3 (13)	375	Eng	72			328530-1X	7170-16X
489XXAHX-*5 (1)	140	Opp	143				Furnished								
680XFAHX-*5 (8)	375	Opp	45				Furnished								
680XHAHX-*5 (18)	375	Opp	72				Furnished								
680XQAHX-*5 (9)	375	Opp	62				Furnished								
680XRAHX-*5 (16)	350	Opp	72				Furnished								
680XSAHX-*5 (12)	325	Opp	86				Furnished								
823XBAHX-*3 (20)	500	Opp	30				Furnished								
823XDAHX-*3 (24)	500	Opp	36				Furnished								
823XGAHX-*3 (25)	500	Opp	39				Furnished								
823XJAHX-*3 (21)	500	Opp	46				Furnished								
823XMAHX-*3 (19)	500	Opp	54				Furnished								
823XRAHX-*3 (23)	400	Opp	75				Furnished								
823XTKTX-*3 (15)	350	Opp	90		8-A-165(26)		Furnished								
880XBAHX-*3 (3)	500	Opp	30				Furnished								
880XJAHX-*3 (4)	500	Opp	46				Furnished								
880XMAHX-*3 (5)	500	Opp	54				Furnished								
880XQAHX-*3 (14)	450	Opp	64				Furnished								

Continued Next Page

CAUTION: 660/680 Series: Applications above 1500 RPM, contact Chelsea Technical Service for approval.

NOTE: The AK & XK output flanges can not be used with the "A" & "C" ratios on the 489 Series PTOs due to mounting stud interference. Use a RA or RB rotatable flange for the XK and the RA for the AK flange.

NOTE: 272/282 Series stated torque values on this page are for Intermittent and Continuous Duty Applications.

(1) Input Gear Part No. 5-P-1004
(2) Input Gear Part No. 5-P-1077
(3) Input Gear Part No. 5-P-1100
(4) Input Gear Part No. 5-P-1102
(5) Input Gear Part No. 5-P-1103
(8) Input Gear Part No. 5-P-1242
(9) Input Gear Part No. 5-P-1246
(10) Input Gear Part No. 5-P-1280
(11) Input Gear Part No. 5-P-1287
(12) Input Gear Part No. 5-P-1322
(13) Input Gear Part No. 5-P-1364
(14) Input Gear Part No. 5-P-1385
(15) Input Gear Part No. 5-P-1395
(16) Input Gear Part No. 5-P-1441
(18) Input Gear Part No. 5-P-1494
(19) Input Gear Part No. 5-P-283
(20) Input Gear Part No. 5-P-285
(21) Input Gear Part No. 5-P-325
(23) Input Gear Part No. 5-P-721
(24) Input Gear Part No. 5-P-971
(25) Input Gear Part No. 5-P-980
(26) Filler block furnished with P.T.O.

Parker Hannifin Corporation
Chelsea Products Division
Olive Branch, MS 38654 USA

TRL107

LEFT SIDE ONLY

TRANSMISSION GEAR DATA:
L.S. 08-BOLT Opening Gear FORWARD of Centerline
34 Teeth - SPUR

PITCH LINE TO APERTURE FACE:
0.6250" (15.8800MM)

RIGHT SIDE ONLY

TRANSMISSION GEAR DATA:
R.S. 06-BOLT Opening Gear FORWARD of Centerline
34 Teeth - SPUR

PITCH LINE TO APERTURE FACE:
3.0850" (78.3600MM)

Caution: Application Approval Required for PTO Output Shaft Speeds Above 2500 RPM

LEFT Side PTO Model	Inter. Torq.	Dir. Rot.	Engine % Fwd.	Engine % Rev.	Filler Block	Adapter Assy.	Stud Kit	RIGHT Side PTO Model	Inter. Torq.	Dir. Rot.	Engine % Fwd.	Engine % Rev.	Filler Block	Adapter Assy.	Stud Kit
ONE SPEED - TWO GEAR - MECHANICAL SHIFT															
880XRAHX-*3 (6)	400	Opp	75				Furnished								
880XTAHX-*3 (7)	350	Opp	96				Furnished								
ONE SPEED - TWO GEAR POWERSHIFT (AIR OR HYDRAULIC)															
282XBAJX-*5	300	Opp	31				Furnished	272KAAJX-*3	300	Eng	25			328530-1X	7170-16X
282XCAJX-*5	300	Opp	37				Furnished	272KBAJX-*3	300	Eng	31			328530-1X	7170-16X
282XDAJX-*5	300	Opp	44				Furnished	272KCAJX-*3	300	Eng	37			328530-1X	7170-16X
282XGAJX-*5	300	Opp	52				Furnished	272KDAJX-*3	300	Eng	44			328530-1X	7170-16X
282XKAJX-*5	300	Opp	59				Furnished	272KGAJX-*3	300	Eng	52			328530-1X	7170-16X
282XMAJX-*5	300	Opp	66				Furnished	272KKAJX-*3	300	Eng	59			328530-1X	7170-16X
282XPAJX-*5	300	Opp	73				Furnished	272KMAJX-*3	300	Eng	66			328530-1X	7170-16X
282XSAJX-*5	300	Opp	82				Furnished	272KPAJX-*3	300	Eng	73			328530-1X	7170-16X
282XTAJX-*5	300	Opp	92				Furnished	272KSAJX-*3	300	Eng	82			328530-1X	7170-16X
ONE SPEED - TWO GEAR - POWERSHIFT (AIR)															
230XAAJX-*3	250	Opp	24			328481X	Furnished	236KAAHX-*3 (17)	250	Eng	31			328530-1X	7170-16X
230XAAJX-*6	250	Eng	33			328764X	Furnished	236KDAHX-*3 (1)	250	Eng	47			328530-1X	7170-16X
230XBAJX-*3	250	Opp	31			328481X	Furnished	236KKAHX-*3 (1)	250	Eng	60			328530-1X	7170-16X
230XBAJX-*6	250	Eng	42			328764X	Furnished	236KQAHX-*3 (1)	250	Eng	81			328530-1X	7170-16X
230XDAJX-*3	250	Opp	35			328481X	Furnished	236KUAHX-*3 (1)	225	Eng	93			328530-1X	7170-16X
230XDAJX-*6	250	Eng	49			328764X	Furnished								
230XKAJX-*3	250	Opp	48			328481X	Furnished								
230XKAJX-*6	250	Eng	67			328764X	Furnished								
230XQAJX-*3	250	Opp	64			328481X	Furnished								
230XQAJX-*6	250	Eng	89			328764X	Furnished								
230XUAJX-*3	225	Opp	102			328481X	Furnished								
230XUAJX-*6	225	Eng	142			328764X	Furnished								
236XAAHX-*6 (17)	250	Eng	43			328764X	Furnished								
236XDAHX-*6 (1)	250	Eng	65			328764X	Furnished								
236XKAHX-*6 (1)	250	Eng	83			328764X	Furnished								
236XQAHX-*6 (1)	250	Eng	112			328764X	Furnished								
236XUAHX-*6 (1)	225	Eng	129			328764X	Furnished								

Continued Next Page

CAUTION: 660/680 Series: Applications above 1500 RPM, contact Chelsea Technical Service for approval.

NOTE: The AK & XK output flanges can not be used with the "A" & "C" ratios on the 489 Series PTOs due to mounting stud interference. Use a RA or RB rotatable flange for the XK and the RA for the AK flange.

NOTE: 272/282 Series stated torque values on this page are for Intermittent and Continuous Duty Applications.

(1) Input Gear Part No. 5-P-1004
(6) Input Gear Part No. 5-P-1104
(7) Input Gear Part No. 5-P-1105
(17) Input Gear Part No. 5-P-1486

Parker Hannifin Corporation
Chelsea Products Division
Olive Branch, MS 38654 USA

TRL107

LEFT SIDE ONLY

TRANSMISSION GEAR DATA:
L.S. 08-BOLT Opening Gear FORWARD of Centerline
34 Teeth - SPUR

PITCH LINE TO APERTURE FACE:
0.6250" (15.8800MM)

RIGHT SIDE ONLY

TRANSMISSION GEAR DATA:
R.S. 06-BOLT Opening Gear FORWARD of Centerline
34 Teeth - SPUR

PITCH LINE TO APERTURE FACE:
3.0850" (78.3600MM)

Caution: Application Approval Required for PTO Output Shaft Speeds Above 2500 RPM

LEFT Side PTO Model	Inter. Torq.	Dir. Rot.	Engine % Fwd.	Engine % Rev.	Filler Block	Adapter Assy.	Stud Kit	RIGHT Side PTO Model	Inter. Torq.	Dir. Rot.	Engine % Fwd.	Engine % Rev.	Filler Block	Adapter Assy.	Stud Kit
ONE SPEED - TWO GEAR - POWERSHIFT (AIR)															
238XAAHX-*6 (17)	250	Opp	43				Furnished								
238XDAHX-*6 (1)	250	Opp	65				Furnished								
238XKAHX-*6 (1)	250	Opp	83				Furnished								
238XQAHX-*6 (1)	250	Opp	112				Furnished								
238XUAHX-*6 (1)	225	Opp	129				Furnished								
885XBAHX-*3 (3)	500	Opp	30				Furnished								
885XJAHX-*3 (4)	500	Opp	46				Furnished								
885XMAHX-*3 (5)	500	Opp	54				Furnished								
ONE SPEED - FORWARD & REVERSE															
340SFAHX-*5 (22)	200	Opp	39	41		310778X	Furnished	340XFAHX-*5 (22)	200	Eng	39	41	7-A-140(P)(26)	328530-1X	7170-16X
352XSAHX-*6 (1)	140	Eng	121	157		328764X	Furnished	352XSAHX-*3 (1)	140	Eng	87	113		328530-1X	7170-16X
352ZSAHX-*5 (1)	140	Opp	87	113		328564X	Furnished								
863XBAHX-*5	500	Opp	30	38			Furnished								
GEARED ADAPTERS															
628XAHX-4AH	250	Eng	0				Furnished								

CAUTION: 660/680 Series: Applications above 1500 RPM, contact Chelsea Technical Service for approval.

NOTE: The AK & XK output flanges can not be used with the "A" & "C" ratios on the 489 Series PTOs due to mounting stud interference. Use a RA or RB rotatable flange for the XK and the RA for the AK flange.

NOTE: 272/282 Series stated torque values on this page are for Intermittent and Continuous Duty Applications.

(1) Input Gear Part No. 5-P-1004
(3) Input Gear Part No. 5-P-1100
(4) Input Gear Part No. 5-P-1102
(5) Input Gear Part No. 5-P-1103
(17) Input Gear Part No. 5-P-1486
(22) Input Gear Part No. 5-P-581
(26) Filler block furnished with P.T.O.

Parker Hannifin Corporation
Chelsea Products Division
Olive Branch, MS 38654 USA

T2090
T2090-L
T2130 (Front Box)
T2130-B (Front Box)
T2180 (Front Box)
T2180-B (Front Box)
T309
T309L
T309LR
T310-MLR (Front Box)
T313H (Front Box)
T313L (Front Box)
T313L21 (Front Box)
T313LR (Front Box)
T313LR21 (Front Box)
T318 (Front Box)
T318L (Front Box)
T318L21 (Front Box)
T318LR (Front Box)
T318LR21 (Front Box)
TM308M (Front box)
TM309M (Front Box)

LEFT SIDE ONLY

TRANSMISSION GEAR DATA:
L.S. 08-BOLT Opening Gear FORWARD of Centerline
54 Teeth - SPUR

PITCH LINE TO APERTURE FACE:
0.8100" (20.5700MM)

RIGHT SIDE ONLY

TRANSMISSION GEAR DATA:
R.S. 06-BOLT Opening Gear FORWARD of Centerline
54 Teeth - SPUR

PITCH LINE TO APERTURE FACE:
1.0850" (27.5600MM)

Caution: Application Approval Required for PTO Output Shaft Speeds Above 2500 RPM

LEFT Side PTO Model	Inter. Torq.	Dir. Rot.	Engine % Fwd.	Engine % Rev.	Filler Block	Adapter Assy.	Stud Kit	RIGHT Side PTO Model	Inter. Torq.	Dir. Rot.	Engine % Fwd.	Engine % Rev.	Filler Block	Adapter Assy.	Stud Kit
ONE SPEED - TWO GEAR - MECHANICAL SHIFT															
221ZCDAX-*5	250	Opp	68			328564X	Furnished	221XCAHX-*3	250	Eng	67		7-A-032(P)(23)	328554-2X	Furnished
221ZEDAX-*5	250	Opp	75			328564X	Furnished	221XCDAX-*3	250	Opp	68				Furnished
221ZLDAX-*5	200	Opp	101			328564X	Furnished	221XEAHX-*3	250	Eng	77			328554-2X	Furnished
221ZPDAX-*5	200	Opp	122			328564X	Furnished	221XEDAX-*3	250	Opp	75				Furnished
489ZADAX-*5 (12)	250	Opp	59				Furnished	221XLAHX-*3	200	Eng	104			328554-2X	Furnished
489ZCDAX-*5 (13)	250	Opp	76				Furnished	221XLDAX-*3	200	Opp	101				Furnished
489ZFDAX-*5 (6)	250	Opp	94				Furnished	221XPAHX-*3	200	Eng	125			328554-2X	Furnished
489ZHDAX-*5 (17)	250	Opp	109				Furnished	221XPDAX-*3	200	Opp	122				Furnished
489ZLDAX-*5 (4)	250	Opp	121				Furnished	442XFAHX-*3 (5)	250	Eng	93			328554-2X	Furnished
489ZQDAX-*5 (4)	225	Opp	130				Furnished	442XHAHX-*3 (17)	250	Eng	109			328554-2X	Furnished
489ZRDAX-*5 (4)	225	Opp	151				Furnished	442XLAHX-*3 (3)	250	Eng	120			328554-2X	Furnished
489ZSDAX-*5 (4)	200	Opp	180				Furnished	442XQAHX-*3 (3)	225	Eng	130			328554-2X	Furnished
489ZUDAX-*5 (4)	195	Opp	214				Furnished	442XRAHX-*3 (3)	225	Eng	150			328554-2X	Furnished
489ZWDAX-*5 (4)	175	Opp	252				Furnished	442XSAHX-*3 (3)	200	Eng	179			328554-2X	Furnished
489ZXDAX-*5 (4)	140	Opp	298				Furnished	442XUAHX-*3 (3)	195	Eng	213			328554-2X	Furnished
680ZFDAX-*5 (14)	375	Opp	94				Furnished	442XWAHX-*3 (3)	175	Eng	250			328554-2X	Furnished
680ZQDAX-*5 (15)	375	Opp	130				Furnished	442XXAHX-*3 (3)	140	Eng	296			328554-2X	Furnished
680ZSDAX-*5 (16)	325	Opp	180				Furnished	442ZADAX-*3 (12)	250	Opp	59		7-A-062		Furnished
823XBDAX-*5 (20)	500	Opp	61				Furnished	442ZCDAX-*3 (13)	250	Opp	76		7-A-062		Furnished
823XMDAX-*5 (21)	500	Opp	108				Furnished	442ZFDAX-*3 (6)	250	Opp	94		7-A-062		Furnished
823XRDAX-*5 (22)	400	Opp	150				Furnished	442ZHDAX-*3 (17)	250	Opp	109		7-A-062		Furnished
880XBDAX-*5 (7)	500	Opp	61				Furnished	442ZLDAX-*3 (4)	250	Opp	121		7-A-062		Furnished
880XGDAX-*5 (11)	500	Opp	78				Furnished	442ZQDAX-*3 (4)	225	Opp	130		7-A-062		Furnished
880XMDAX-*5 (8)	500	Opp	108				Furnished	442ZRDAX-*3 (4)	225	Opp	151		7-A-062		Furnished
880XRDAX-*5 (9)	400	Opp	150				Furnished	442ZSDAX-*3 (4)	200	Opp	180		7-A-062		Furnished
880XTDAX-*5 (10)	350	Opp	193				Furnished	442ZUDAX-*3 (4)	195	Opp	214		7-A-062		Furnished
								442ZWDAX-*3 (4)	175	Opp	252		7-A-062		Furnished
								442ZXDAX-*3 (4)	140	Opp	298		7-A-062		Furnished
								660XHAHX-*3 (17)	375	Eng	109			328554-2X	Furnished
								660ZFDAX-*3 (14)	375	Opp	94		7-A-062		Furnished
								660ZQDAX-*3 (15)	375	Opp	130		7-A-062		Furnished
								660ZSDAX-*3 (16)	325	Opp	180		7-A-062		Furnished

Continued Next Page

CAUTION: Do not use geared adapters with 442 "A" and "C" ratios.

CAUTION: 660/680 Series: Applications above 1500 RPM, contact Chelsea Technical Service for approval.

NOTE: Using the 328554-2X adapter will permit PTO installation on trucks with set back front axle.

NOTE: The 812 Series with a direct mount pump flange or a universal joint larger than the 1000 series will interfere with the reverse idler bulge.

NOTE: The AK & XK output flanges can not be used with the "A" & "C" ratios on the 489 Series PTOs due to mounting stud interference. Use a RA or RB rotatable flange for the XK and the RA for the AK flange.

NOTE: 272/282 Series stated torque values on this page are for Intermittent and Continuous Duty Applications.

(3) Input Gear Part No. 5-P-1004
(4) Input Gear Part No. 5-P-1037
(5) Input Gear Part No. 5-P-1077
(6) Input Gear Part No. 5-P-1085
(7) Input Gear Part No. 5-P-1120
(8) Input Gear Part No. 5-P-1121
(9) Input Gear Part No. 5-P-1122
(10) Input Gear Part No. 5-P-1123
(11) Input Gear Part No. 5-P-1174
(12) Input Gear Part No. 5-P-1284
(13) Input Gear Part No. 5-P-1291
(14) Input Gear Part No. 5-P-1330
(15) Input Gear Part No. 5-P-1331
(16) Input Gear Part No. 5-P-1332
(17) Input Gear Part No. 5-P-1365
(20) Input Gear Part No. 5-P-636
(21) Input Gear Part No. 5-P-637
(22) Input Gear Part No. 5-P-808
(23) Filler block furnished with P.T.O.

Parker Hannifin Corporation
Chelsea Products Division
Olive Branch, MS 38654 USA

T2090
T2090-L
T2130 (Front Box)
T2130-B (Front Box)
T2180 (Front Box)
T2180-B (Front Box)
T309
T309L
T309LR
T310-MLR (Front Box)
T313H (Front Box)
T313L (Front Box)
T313L21 (Front Box)
T313LR (Front Box)
T313LR21 (Front Box)
T318 (Front Box)
T318L (Front Box)
T318L21 (Front Box)
T318LR (Front Box)
T318LR21 (Front Box)
TM308M (Front box)
TM309M (Front Box)

LEFT SIDE ONLY

TRANSMISSION GEAR DATA:
L.S. 08-BOLT Opening Gear FORWARD of Centerline
54 Teeth - SPUR

PITCH LINE TO APERTURE FACE:
0.8100" (20.5700MM)

RIGHT SIDE ONLY

TRANSMISSION GEAR DATA:
R.S. 06-BOLT Opening Gear FORWARD of Centerline
54 Teeth - SPUR

PITCH LINE TO APERTURE FACE:
1.0850" (27.5600MM)

Caution: Application Approval Required for PTO Output Shaft Speeds Above 2500 RPM

LEFT Side PTO Model	Inter. Torq.	Dir. Rot.	Engine % Fwd.	Engine % Rev.	Filler Block	Adapter Assy.	Stud Kit	RIGHT Side PTO Model	Inter. Torq.	Dir. Rot.	Engine % Fwd.	Engine % Rev.	Filler Block	Adapter Assy.	Stud Kit
ONE SPEED - TWO GEAR POWERSHIFT (AIR OR HYDRAULIC)															
282XBDAX-*5	300	Opp	62				Furnished	272XADAX-*3	300	Opp	50				Furnished
282XCDAX-*5	300	Opp	75				Furnished	272XBDAX-*3	300	Opp	62				Furnished
282XDDAX-*5	300	Opp	89				Furnished	272XCDAX-*3	300	Opp	75				Furnished
282XGDAX-*5	300	Opp	106				Furnished	272XDDAX-*3	300	Opp	89				Furnished
282XKDAX-*5	300	Opp	119				Furnished	272XGDAX-*3	300	Opp	106				Furnished
282XMDAX-*5	300	Opp	133				Furnished	272XKDAX-*3	300	Opp	119				Furnished
282XPDAX-*5	300	Opp	148				Furnished	272XMDAX-*3	300	Opp	133				Furnished
282XSDAX-*5	300	Opp	166				Furnished	272XPDAX-*3	300	Opp	148				Furnished
282XTDAX-*5	269	Opp	186				Furnished	272XSDAX-*3	300	Opp	166				Furnished
ONE SPEED - TWO GEAR - POWERSHIFT (AIR)															
230XADAX-*5	250	Opp	48			328481X	Furnished	230XADAX-*3	250	Opp	48				Furnished
230XBDAX-*5	250	Opp	62			328481X	Furnished	230XBDAX-*3	250	Opp	62				Furnished
230XDDAX-*5	250	Opp	72			328481X	Furnished	230XDDAX-*3	250	Opp	72				Furnished
230XKDAX-*5 (1)	250	Opp	97			328481X	Furnished	230XKDAX-*3 (1)	250	Opp	97				Furnished
230XQDAX-*5 (2)	250	Opp	129			328481X	Furnished	230XQDAX-*3 (2)	250	Opp	129				Furnished
238ZADAX-*5 (4)	250	Opp	65				Furnished	236XAAHX-*3 (18)	250	Eng	65			328554-2X	Furnished
238ZDDAX-*5 (4)	250	Opp	98				Furnished	236XDAHX-*3 (3)	250	Eng	97			328554-2X	Furnished
238ZKDAX-*5 (4)	250	Opp	126				Furnished	236XKAHX-*3 (3)	250	Eng	125			328554-2X	Furnished
238ZQDAX-*5 (4)	250	Opp	169				Furnished	236XQAHX-*3 (3)	250	Eng	168			328554-2X	Furnished
238ZUDAX-*5 (4)	225	Opp	194				Furnished	236XUAHX-*3 (3)	225	Eng	192			328554-2X	Furnished
885XBDAX-*5 (7)	500	Opp	61				Furnished								
885XGDAX-*5 (11)	500	Opp	78				Furnished								
885XMDAX-*5 (8)	500	Opp	108				Furnished								
ONE SPEED - FORWARD & REVERSE															
348ZFDAX-*5 (19)	200	Opp	85	90			Furnished	340SFDAX-*5 (19)	200	Opp	85	90			Furnished
863XBDAX-*5	500	Opp	61	75			Furnished	352XSAHX-*3 (3)	140	Eng	181	234		328554-2X	Furnished
GEARED ADAPTERS															
628ZDAX-3DA	250	Eng	0				Furnished	626ZDAX-3DA	250	Eng	0		7-A-062		Furnished

Continued Next Page

CAUTION: Do not use geared adapters with 442 "A" and "C" ratios.

CAUTION: 660/680 Series: Applications above 1500 RPM, contact Chelsea Technical Service for approval.

NOTE: Using the 328554-2X adapter will permit PTO installation on trucks with set back front axle.

NOTE: The 812 Series with a direct mount pump flange or a universal joint larger than the 1000 series will interfere with the reverse idler bulge.

NOTE: The AK & XK output flanges can not be used with the "A" & "C" ratios on the 489 Series PTOs due to mounting stud interference. Use a RA or RB rotatable flange for the XK and the RA for the AK flange.

NOTE: 272/282 Series stated torque values on this page are for Intermittent and Continuous Duty Applications.

(1) Input Gear Part No. 5-P--P-843
(2) Input Gear Part No. 5-P--P-844
(3) Input Gear Part No. 5-P-1004
(4) Input Gear Part No. 5-P-1037
(7) Input Gear Part No. 5-P-1120
(8) Input Gear Part No. 5-P-1121
(11) Input Gear Part No. 5-P-1174
(18) Input Gear Part No. 5-P-1486
(19) Input Gear Part No. 5-P-634

Parker Hannifin Corporation
Chelsea Products Division
Olive Branch, MS 38654 USA

T2090
T2090-L
T2130 (Front Box)
T2130-B (Front Box)
T2180 (Front Box)
T2180-B (Front Box)
T309
T309L
T309LR
T310-MLR (Front Box)
T313H (Front Box)
T313L (Front Box)
T313L21 (Front Box)
T313LR (Front Box)
T313LR21 (Front Box)
T318 (Front Box)
T318L (Front Box)
T318L21 (Front Box)
T318LR (Front Box)
T318LR21 (Front Box)
TM308M (Front box)
TM309M (Front Box)

LEFT SIDE ONLY

TRANSMISSION GEAR DATA:
L.S. 08-BOLT Opening Gear FORWARD of Centerline
54 Teeth - SPUR

PITCH LINE TO APERTURE FACE:
0.8100" (20.5700MM)

RIGHT SIDE ONLY

TRANSMISSION GEAR DATA:
R.S. 06-BOLT Opening Gear FORWARD of Centerline
54 Teeth - SPUR

PITCH LINE TO APERTURE FACE:
1.0850" (27.5600MM)

Caution: Application Approval Required for PTO Output Shaft Speeds Above 2500 RPM

LEFT Side PTO Model	Inter. Torq.	Dir. Rot.	Engine %		Filler Block	Adapter Assy.	Stud Kit	RIGHT Side PTO Model	Inter. Torq.	Dir. Rot.	Engine %		Filler Block	Adapter Assy.	Stud Kit
			Fwd.	Rev.							Fwd.	Rev.			
GEARED ADAPTERS															
								630ZDAX-3DA	250	Eng	0		7-A-062		Furnished
								645ZDAX-3DA	250	Eng	0		7-A-062		Furnished

CAUTION: Do not use geared adapters with 442 "A" and "C" ratios.

CAUTION: 660/680 Series: Applications above 1500 RPM, contact Chelsea Technical Service for approval.

NOTE: Using the 328554-2X adapter will permit PTO installation on trucks with set back front axle.

NOTE: The 812 Series with a direct mount pump flange or a universal joint larger than the 1000 series will interfere with the reverse idler bulge.

NOTE: The AK & XK output flanges can not be used with the "A" & "C" ratios on the 489 Series PTOs due to mounting stud interference. Use a RA or RB rotatable flange for the XK and the RA for the AK flange.

NOTE: 272/282 Series stated torque values on this page are for Intermittent and Continuous Duty Applications.

Parker Hannifin Corporation
Chelsea Products Division
Olive Branch, MS 38654 USA

T2100
T2110-B (FRONT BOX FOR T2110B)

LEFT SIDE ONLY

TRANSMISSION GEAR DATA:
L.S. 08-BOLT Opening Gear FORWARD of Centerline
54 Teeth - SPUR

PITCH LINE TO APERTURE FACE:
0.8100" (20.5700MM)

RIGHT SIDE ONLY

TRANSMISSION GEAR DATA:
R.S. 06-BOLT Opening Gear FORWARD of Centerline
54 Teeth - SPUR

PITCH LINE TO APERTURE FACE:
1.0850" (27.5600MM)

Caution: Application Approval Required for PTO Output Shaft Speeds Above 2500 RPM

ONE SPEED - TWO GEAR - MECHANICAL SHIFT

LEFT Side PTO Model	Inter. Torq.	Dir. Rot.	Engine % Fwd.	Engine % Rev.	Filler Block	Adapter Assy.	Stud Kit	RIGHT Side PTO Model	Inter. Torq.	Dir. Rot.	Engine % Fwd.	Engine % Rev.	Filler Block	Adapter Assy.	Stud Kit
221ZCDAX-*5	250	Opp	63			328564X	Furnished	221XCAHX-*3	250	Eng	62		7-A-032(P)(24)	328554-2X	Furnished
221ZEDAX-*5	250	Opp	70			328564X	Furnished	221XCDAX-*3	250	Opp	63				Furnished
221ZLDAX-*5	200	Opp	94			328564X	Furnished	221XEAHX-*3	250	Eng	72			328554-2X	Furnished
221ZPDAX-*5	200	Opp	113			328564X	Furnished	221XEDAX-*3	250	Opp	70				Furnished
489ZADAX-*5 (12)	250	Opp	55				Furnished	221XLAHX-*3	200	Eng	96			328554-2X	Furnished
489ZCDAX-*5 (13)	250	Opp	70				Furnished	221XLDAX-*3	200	Opp	94				Furnished
489ZFDAX-*5 (6)	250	Opp	87				Furnished	221XPAHX-*3	200	Eng	116			328554-2X	Furnished
489ZHDAX-*5 (17)	250	Opp	101				Furnished	221XPDAX-*3	200	Opp	113				Furnished
489ZLDAX-*5 (4)	250	Opp	113				Furnished	442XFAHX-*3 (5)	250	Eng	86			328554-2X	Furnished
489ZQDAX-*5 (4)	225	Opp	121				Furnished	442XHAHX-*3 (17)	250	Eng	101			328554-2X	Furnished
489ZRDAX-*5 (4)	225	Opp	140				Furnished	442XLAHX-*3 (3)	250	Eng	112			328554-2X	Furnished
489ZSDAX-*5 (4)	200	Opp	167				Furnished	442XQAHX-*3 (3)	225	Eng	120			328554-2X	Furnished
489ZUDAX-*5 (4)	195	Opp	199				Furnished	442XRAHX-*3 (3)	225	Eng	139			328554-2X	Furnished
489ZWDAX-*5 (4)	175	Opp	234				Furnished	442XSAHX-*3 (3)	200	Eng	166			328554-2X	Furnished
489ZXDAX-*5 (4)	140	Opp	277				Furnished	442XUAHX-*3 (3)	195	Eng	198			328554-2X	Furnished
680ZFDAX-*5 (14)	375	Opp	87				Furnished	442XWAHX-*3 (3)	175	Eng	233			328554-2X	Furnished
680ZQDAX-*5 (15)	375	Opp	121				Furnished	442XXAHX-*3 (3)	140	Eng	275			328554-2X	Furnished
680ZSDAX-*5 (16)	325	Opp	167				Furnished	442ZADAX-*3 (12)	250	Opp	55		7-A-062		Furnished
823XBDAX-*5 (21)	500	Opp	57				Furnished	442ZCDAX-*3 (13)	250	Opp	70		7-A-062		Furnished
823XMDAX-*5 (22)	500	Opp	101				Furnished	442ZFDAX-*3 (6)	250	Opp	87		7-A-062		Furnished
823XRDAX-*5 (23)	400	Opp	139				Furnished	442ZHDAX-*3 (17)	250	Opp	101		7-A-062		Furnished
880XBDAX-*5 (7)	500	Opp	57				Furnished	442ZLDAX-*3 (4)	250	Opp	113		7-A-062		Furnished
880XGDAX-*5 (11)	500	Opp	73				Furnished	442ZQDAX-*3 (4)	225	Opp	121		7-A-062		Furnished
880XMDAX-*5 (8)	500	Opp	101				Furnished	442ZRDAX-*3 (4)	225	Opp	140		7-A-062		Furnished
880XRDAX-*5 (9)	400	Opp	139				Furnished	442ZSDAX-*3 (4)	200	Opp	167		7-A-062		Furnished
880XTDAX-*5 (10)	350	Opp	179				Furnished	442ZUDAX-*3 (4)	195	Opp	199		7-A-062		Furnished
								442ZWDAX-*3 (4)	175	Opp	234		7-A-062		Furnished
								442ZXDAX-*3 (4)	140	Opp	277		7-A-062		Furnished
								660XHAHX-*3 (17)	375	Eng	101			328554-2X	Furnished
								660ZFDAX-*3 (14)	375	Opp	87		7-A-062		Furnished
								660ZQDAX-*3 (15)	375	Opp	121		7-A-062		Furnished
								660ZSDAX-*3 (16)	325	Opp	167		7-A-062		Furnished

Continued Next Page

CAUTION: Do not use geared adapters with 442 "A" and "C" ratios.

CAUTION: 660/680 Series: Applications above 1500 RPM, contact Chelsea Technical Service for approval.

NOTE: Using the 328554-2X adapter will permit PTO installation on trucks with set back front axle.

NOTE: The 812 Series with a direct mount pump flange or a universal joint larger than the 1000 series will interfere with the reverse idler bulge.

NOTE: The AK & XK output flanges can not be used with the "A" & "C" ratios on the 489 Series PTOs due to mounting stud interference. Use a RA or RB rotatable flange for the XK and the RA for the AK flange.

NOTE: 272/282 Series stated torque values on this page are for Intermittent and Continuous Duty Applications.

(3) Input Gear Part No. 5-P-1004
(4) Input Gear Part No. 5-P-1037
(5) Input Gear Part No. 5-P-1077
(6) Input Gear Part No. 5-P-1085
(7) Input Gear Part No. 5-P-1120
(8) Input Gear Part No. 5-P-1121
(9) Input Gear Part No. 5-P-1122
(10) Input Gear Part No. 5-P-1123
(11) Input Gear Part No. 5-P-1174
(12) Input Gear Part No. 5-P-1284
(13) Input Gear Part No. 5-P-1291
(14) Input Gear Part No. 5-P-1330
(15) Input Gear Part No. 5-P-1331
(16) Input Gear Part No. 5-P-1332
(17) Input Gear Part No. 5-P-1365
(21) Input Gear Part No. 5-P-636
(22) Input Gear Part No. 5-P-637
(23) Input Gear Part No. 5-P-808
(24) Filler block furnished with P.T.O.

T2100
T2110-B (FRONT BOX FOR T2110B)

LEFT SIDE ONLY

TRANSMISSION GEAR DATA:
L.S. 08-BOLT Opening Gear FORWARD of Centerline
54 Teeth - SPUR

PITCH LINE TO APERTURE FACE:
0.8100" (20.5700MM)

RIGHT SIDE ONLY

TRANSMISSION GEAR DATA:
R.S. 06-BOLT Opening Gear FORWARD of Centerline
54 Teeth - SPUR

PITCH LINE TO APERTURE FACE:
1.0850" (27.5600MM)

Caution: Application Approval Required for PTO Output Shaft Speeds Above 2500 RPM

LEFT Side PTO Model	Inter. Torq.	Dir. Rot.	Engine % Fwd.	Engine % Rev.	Filler Block	Adapter Assy.	Stud Kit	RIGHT Side PTO Model	Inter. Torq.	Dir. Rot.	Engine % Fwd.	Engine % Rev.	Filler Block	Adapter Assy.	Stud Kit
ONE SPEED - TWO GEAR POWERSHIFT (AIR OR HYDRAULIC)															
282XBDAX-*5	300	Opp	57				Furnished	272XADAX-*3	300	Opp	47				Furnished
282XCDAX-*5	300	Opp	69				Furnished	272XBDAX-*3	300	Opp	57				Furnished
282XDDAX-*5	300	Opp	83				Furnished	272XCDAX-*3	300	Opp	69				Furnished
282XGDAX-*5	300	Opp	99				Furnished	272XDDAX-*3	300	Opp	83				Furnished
282XKDAX-*5	300	Opp	110				Furnished	272XGDAX-*3	300	Opp	99				Furnished
282XMDAX-*5	300	Opp	123				Furnished	272XKDAX-*3	300	Opp	110				Furnished
282XPDAX-*5	300	Opp	138				Furnished	272XMDAX-*3	300	Opp	123				Furnished
282XSDAX-*5	300	Opp	154				Furnished	272XPDAX-*3	300	Opp	138				Furnished
282XTDAX-*5	290	Opp	172				Furnished	272XSDAX-*3	300	Opp	154				Furnished
ONE SPEED - TWO GEAR - POWERSHIFT (AIR)															
230XADAX-*5	250	Opp	44			328481X	Furnished	230XADAX-*3	250	Opp	44				Furnished
230XBDAX-*5	250	Opp	58			328481X	Furnished	230XBDAX-*3	250	Opp	58				Furnished
230XDDAX-*5	250	Opp	67			328481X	Furnished	230XDDAX-*3	250	Opp	67				Furnished
230XKDAX-*5 (1)	250	Opp	90			328481X	Furnished	230XKDAX-*3 (1)	250	Opp	90				Furnished
230XQDAX-*5 (2)	250	Opp	120			328481X	Furnished	230XQDAX-*3 (2)	250	Opp	120				Furnished
236ZADAX-*5 (19)	250	Opp	61		7-A-062(P)	328481X	Furnished	236XAAHX-*3 (18)	250	Eng	61			328554-2X	Furnished
238ZADAX-*5 (19)	250	Opp	61				Furnished	236XDAHX-*3 (3)	250	Eng	91			328554-2X	Furnished
238ZDDAX-*5 (4)	250	Opp	92				Furnished	236XKAHX-*3 (3)	250	Eng	116			328554-2X	Furnished
238ZKDAX-*5 (4)	250	Opp	116				Furnished	236XQAHX-*3 (3)	250	Eng	156			328554-2X	Furnished
238ZQDAX-*5 (4)	250	Opp	157				Furnished	236XUAHX-*3 (3)	225	Eng	179			328554-2X	Furnished
238ZUDAX-*5 (4)	225	Opp	180				Furnished	236ZADAX-*3 (19)	250	Opp	61		7-A-062		Furnished
885XBDAX-*5 (7)	500	Opp	57				Furnished	236ZDDAX-*3 (4)	250	Opp	92		7-A-062		Furnished
885XGDAX-*5 (11)	500	Opp	73				Furnished	236ZKDAX-*3 (4)	250	Opp	116		7-A-062		Furnished
885XMDAX-*5 (8)	500	Opp	101				Furnished	236ZQDAX-*3 (4)	250	Opp	157		7-A-062		Furnished
								236ZUDAX-*3 (4)	225	Opp	180		7-A-062		Furnished
ONE SPEED - FORWARD & REVERSE															
348ZFDAX-*5 (20)	200	Opp	79	83			Furnished	340SFDAX-*5 (20)	200	Opp	79	83			Furnished
863XBDAX-*5	500	Opp	57	70			Furnished	352XSAHX-*3 (3)	140	Eng	168	217		328554-2X	Furnished

Continued Next Page

CAUTION: Do not use geared adapters with 442 "A" and "C" ratios.

CAUTION: 660/680 Series: Applications above 1500 RPM, contact Chelsea Technical Service for approval.

NOTE: Using the 328554-2X adapter will permit PTO installation on trucks with set back front axle.

NOTE: The 812 Series with a direct mount pump flange or a universal joint larger than the 1000 series will interfere with the reverse idler bulge.

NOTE: The AK & XK output flanges can not be used with the "A" & "C" ratios on the 489 Series PTOs due to mounting stud interference. Use a RA or RB rotatable flange for the XK and the RA for the AK flange.

NOTE: 272/282 Series stated torque values on this page are for Intermittent and Continuous Duty Applications.

(1) Input Gear Part No. 5-P--P-843
(2) Input Gear Part No. 5-P--P-844
(3) Input Gear Part No. 5-P-1004
(4) Input Gear Part No. 5-P-1037
(7) Input Gear Part No. 5-P-1120
(8) Input Gear Part No. 5-P-1121
(11) Input Gear Part No. 5-P-1174
(18) Input Gear Part No. 5-P-1486
(19) Input Gear Part No. 5-P-1487
(20) Input Gear Part No. 5-P-634

Parker Hannifin Corporation
Chelsea Products Division
Olive Branch, MS 38654 USA

T2100
T2110-B (FRONT BOX FOR T2110B)

LEFT SIDE ONLY

TRANSMISSION GEAR DATA:
L.S. 08-BOLT Opening Gear FORWARD of Centerline
54 Teeth - SPUR

PITCH LINE TO APERTURE FACE:
0.8100" (20.5700MM)

RIGHT SIDE ONLY

TRANSMISSION GEAR DATA:
R.S. 06-BOLT Opening Gear FORWARD of Centerline
54 Teeth - SPUR

PITCH LINE TO APERTURE FACE:
1.0850" (27.5600MM)

Caution: Application Approval Required for PTO Output Shaft Speeds Above 2500 RPM

LEFT Side PTO Model	Inter. Torq.	Dir. Rot.	Engine %		Filler Block	Adapter Assy.	Stud Kit	RIGHT Side PTO Model	Inter. Torq.	Dir. Rot.	Engine %		Filler Block	Adapter Assy.	Stud Kit
			Fwd.	Rev.							Fwd.	Rev.			
GEARED ADAPTERS															
628ZDAX-5DA	250	Eng	0				Furnished	626ZDAX-3DA	250	Eng	0		7-A-062		Furnished
								630ZDAX-3DA	250	Eng	0		7-A-062		Furnished
								645ZDAX-3DA	250	Eng	0		7-A-062		Furnished

CAUTION: Do not use geared adapters with 442 "A" and "C" ratios.

CAUTION: 660/680 Series: Applications above 1500 RPM, contact Chelsea Technical Service for approval.

NOTE: Using the 328554-2X adapter will permit PTO installation on trucks with set back front axle.

NOTE: The 812 Series with a direct mount pump flange or a universal joint larger than the 1000 series will interfere with the reverse idler bulge.

NOTE: The AK & XK output flanges can not be used with the "A" & "C" ratios on the 489 Series PTOs due to mounting stud interference. Use a RA or RB rotatable flange for the XK and the RA for the AK flange.

NOTE: 272/282 Series stated torque values on this page are for Intermittent and Continuous Duty Applications.

Parker Hannifin Corporation
Chelsea Products Division
Olive Branch, MS 38654 USA

T2050	T305
T2060	T306
T2070	T307
T2070-A (Front Box)	T307M (Front Box)
T2070-B (Front Box)	T308
T2070-F	T308M (Front Box)
T2080	TX2060
T2080-B (Front Box)	X2060

LEFT SIDE ONLY

TRANSMISSION GEAR DATA:
L.S. 08-BOLT Opening Gear FORWARD of Centerline
54 Teeth - SPUR

PITCH LINE TO APERTURE FACE:
0.8100" (20.5700MM)

RIGHT SIDE ONLY

TRANSMISSION GEAR DATA:
R.S. 06-BOLT Opening Gear FORWARD of Centerline
54 Teeth - SPUR

PITCH LINE TO APERTURE FACE:
1.0850" (27.5600MM)

Caution: Application Approval Required for PTO Output Shaft Speeds Above 2500 RPM

LEFT Side PTO Model	Inter. Torq.	Dir. Rot.	Engine % Fwd.	Engine % Rev.	Filler Block	Adapter Assy.	Stud Kit	RIGHT Side PTO Model	Inter. Torq.	Dir. Rot.	Engine % Fwd.	Engine % Rev.	Filler Block	Adapter Assy.	Stud Kit
ONE SPEED - TWO GEAR - MECHANICAL SHIFT															
221ZCDAX-*5	250	Opp	81			328564X	Furnished	221XCDAX-*3	250	Opp	81				Furnished
221ZEDAX-*5	250	Opp	90			328564X	Furnished	221XEDAX-*3	250	Opp	90				Furnished
221ZLDAX-*5	200	Opp	121			328564X	Furnished	221XLDAX-*3	200	Opp	121				Furnished
221ZPDAX-*5	200	Opp	146			328564X	Furnished	221XPDAX-*3	200	Opp	146				Furnished
489ZADAX-*5 (9)	250	Opp	71				Furnished	442ZADAX-*3 (9)	250	Opp	71		7-A-062		Furnished
489ZCDAX-*5 (10)	250	Opp	90				Furnished	442ZCDAX-*3 (10)	250	Opp	90		7-A-062		Furnished
489ZFDAX-*5 (3)	250	Opp	112				Furnished	442ZFDAX-*3 (3)	250	Opp	112		7-A-062		Furnished
489ZHDAX-*5 (14)	250	Opp	130				Furnished	442ZHDAX-*3 (14)	250	Opp	130		7-A-062		Furnished
489ZLDAX-*5 (2)	250	Opp	144				Furnished	442ZLDAX-*3 (2)	250	Opp	144		7-A-062		Furnished
489ZQDAX-*5 (2)	225	Opp	156				Furnished	442ZQDAX-*3 (2)	225	Opp	156		7-A-062		Furnished
489ZRDAX-*5 (2)	225	Opp	180				Furnished	442ZRDAX-*3 (2)	225	Opp	180		7-A-062		Furnished
489ZSDAX-*5 (2)	200	Opp	214				Furnished	442ZSDAX-*3 (2)	200	Opp	214		7-A-062		Furnished
489ZUDAX-*5 (2)	195	Opp	255				Furnished	442ZUDAX-*3 (2)	195	Opp	255		7-A-062		Furnished
489ZWDAX-*5 (2)	175	Opp	301				Furnished	442ZWDAX-*3 (2)	175	Opp	301		7-A-062		Furnished
489ZXDAX-*5 (2)	140	Opp	356				Furnished	442ZXDAX-*3 (2)	140	Opp	356		7-A-062		Furnished
680ZFDAX-*5 (11)	375	Opp	112				Furnished	660ZFDAX-*3 (11)	375	Opp	112		7-A-062		Furnished
680ZQDAX-*5 (12)	375	Opp	156				Furnished	660ZQDAX-*3 (12)	375	Opp	156		7-A-062		Furnished
680ZSDAX-*5 (13)	325	Opp	214				Furnished	660ZSDAX-*3 (13)	325	Opp	214		7-A-062		Furnished
823XBDAX-*5 (18)	500	Opp	73				Furnished								
823XMDAX-*5 (19)	500	Opp	129				Furnished								
823XRDAX-*5 (20)	400	Opp	178				Furnished								
880XBDAX-*5 (4)	500	Opp	73				Furnished								
880XGDAX-*5 (8)	500	Opp	94				Furnished								
880XMDAX-*5 (5)	500	Opp	129				Furnished								
880XRDAX-*5 (6)	400	Opp	178				Furnished								
880XTDAX-*5 (7)	350	Opp	230				Furnished								
ONE SPEED - TWO GEAR POWERSHIFT (AIR OR HYDRAULIC)															
282XBDAX-*5	300	Opp	74				Furnished	272XADAX-*3	300	Opp	60				Furnished
282XCDAX-*5	300	Opp	89				Furnished	272XBDAX-*3	300	Opp	74				Furnished
282XDDAX-*5	300	Opp	107				Furnished	272XCDAX-*3	300	Opp	89				Furnished
282XGDAX-*5	300	Opp	127				Furnished	272XDAJX-*3	300	Opp	107				Furnished

Continued Next Page

CAUTION: 272*S Ratio - Contact Chelsea Engineering for Application approval for continuous duty applications.

CAUTION: Do not use geared adapters with 442 "A" and "C" ratios.

CAUTION: 660/680 Series: Applications above 1500 RPM, contact Chelsea Technical Service for approval.

NOTE: Using the 328554-2X adapter will permit PTO installation on trucks with set back front axle.

NOTE: All the applications shown are for the front box.

NOTE: The 812 Series with a direct mount pump flange or a universal joint larger than the 1000 series will interfere with the reverse idler bulge.

NOTE: The AK & XK output flanges can not be used with the "A" & "C" ratios on the 489 Series PTOs due to mounting stud interference. Use a RA or RB rotatable flange for the XK and the RA for the AK flange.

NOTE: 272/282 Series stated torque values on this page are for Intermittent and Continuous Duty Applications.

(2) Input Gear Part No. 5-P-1037
(3) Input Gear Part No. 5-P-1085
(4) Input Gear Part No. 5-P-1120
(5) Input Gear Part No. 5-P-1121
(6) Input Gear Part No. 5-P-1122
(7) Input Gear Part No. 5-P-1123
(8) Input Gear Part No. 5-P-1174
(9) Input Gear Part No. 5-P-1284
(10) Input Gear Part No. 5-P-1291
(11) Input Gear Part No. 5-P-1330
(12) Input Gear Part No. 5-P-1331
(13) Input Gear Part No. 5-P-1332
(14) Input Gear Part No. 5-P-1365
(18) Input Gear Part No. 5-P-636
(19) Input Gear Part No. 5-P-637
(20) Input Gear Part No. 5-P-808

Parker Hannifin Corporation
Chelsea Products Division
Olive Branch, MS 38654 USA

T2050	T305
T2060	T306
T2070	T307
T2070-A (Front Box)	T307M (Front Box)
T2070-B (Front Box)	T308
T2070-F	T308M (Front Box)
T2080	TX2060
T2080-B (Front Box)	X2060

LEFT SIDE ONLY

TRANSMISSION GEAR DATA:
L.S. 08-BOLT Opening Gear FORWARD of Centerline
54 Teeth - SPUR

PITCH LINE TO APERTURE FACE:
0.8100" (20.5700MM)

RIGHT SIDE ONLY

TRANSMISSION GEAR DATA:
R.S. 06-BOLT Opening Gear FORWARD of Centerline
54 Teeth - SPUR

PITCH LINE TO APERTURE FACE:
1.0850" (27.5600MM)

Caution: Application Approval Required for PTO Output Shaft Speeds Above 2500 RPM

LEFT Side PTO Model	Inter. Torq.	Dir. Rot.	Engine % Fwd.	Engine % Rev.	Filler Block	Adapter Assy.	Stud Kit	RIGHT Side PTO Model	Inter. Torq.	Dir. Rot.	Engine % Fwd.	Engine % Rev.	Filler Block	Adapter Assy.	Stud Kit
ONE SPEED - TWO GEAR POWERSHIFT (AIR OR HYDRAULIC)															
282XKDAX-*5	300	Opp	142				Furnished	272XGDAX-*3	300	Opp	127				Furnished
282XMDAX-*5	300	Opp	158				Furnished	272XKDAX-*3	300	Opp	142				Furnished
282XPDAX-*5	283	Opp	177				Furnished	272XMDAX-*3	300	Opp	158				Furnished
282XSDAX-*5	253	Opp	198				Furnished	272XPDAX-*3	283	Opp	177				Furnished
282XTDAX-*5	226	Opp	221				Furnished	272XSDAX-*3	253	Opp	198				Furnished
ONE SPEED - TWO GEAR - POWERSHIFT (AIR)															
230XADAX-*5	250	Opp	57			328481X	Furnished	230XADAX-*3	250	Opp	57				Furnished
230XBDAX-*5	250	Opp	74			328481X	Furnished	230XBDAX-*3	250	Opp	74				Furnished
230XDDAX-*5	250	Opp	86			328481X	Furnished	230XDDAX-*3	250	Opp	86				Furnished
230XKDAX-*5 (21)	250	Opp	116			328481X	Furnished	230XKDAX-*3 (21)	250	Opp	116				Furnished
230XQDAX-*5	250	Opp	154			328481X	Furnished	230XQDAX-*3 (22)	250	Opp	154				Furnished
236ZADAX-*5 (16)	250	Opp	78		7-A-062(P)	328481X	Furnished	236XAAHX-*3 (15)	250	Eng	78			328554-2X	Furnished
238ZADAX-*5 (16)	250	Opp	78				Furnished	236XDAHX-*3 (1)	250	Eng	117			328554-2X	Furnished
238ZDDAX-*5 (2)	250	Opp	117				Furnished	236XKAHX-*3 (1)	250	Eng	149			328554-2X	Furnished
238ZKDAX-*5 (2)	250	Opp	150				Furnished	236XQAHX-*3 (1)	250	Eng	200			328554-2X	Furnished
238ZQDAX-*5 (2)	250	Opp	202				Furnished	236XUAHX-*3 (1)	225	Eng	230			328554-2X	Furnished
238ZUDAX-*5 (2)	225	Opp	231				Furnished								
885XBDAX-*5 (4)	500	Opp	73				Furnished								
885XGDAX-*5 (8)	500	Opp	94				Furnished								
885XMDAX-*5 (5)	500	Opp	129				Furnished								
ONE SPEED - FORWARD & REVERSE															
348ZFDAX-*5 (17)	200	Opp	102	107			Furnished	340SFDAX-*5 (17)	200	Opp	102	107			Furnished
863XBDAX-*5	500	Opp	73	90			Furnished	352XSAHX-*3 (1)	140	Eng	216	279		328554-2X	Furnished
GEARED ADAPTERS															
628ZDAX-5DA	250	Eng	0				Furnished	626ZDAX-3DA	250	Eng	0		7-A-062		Furnished
								630ZDAX-3DA	250	Eng	0		7-A-062		Furnished
								645ZDAX-3DA	250	Eng	0		7-A-062		Furnished

CAUTION: 272*S Ratio - Contact Chelsea Engineering for Application approval for continuous duty applications.

CAUTION: Do not use geared adapters with 442 "A" and "C" ratios.

CAUTION: 660/680 Series: Applications above 1500 RPM, contact Chelsea Technical Service for approval.

NOTE: Using the 328554-2X adapter will permit PTO installation on trucks with set back front axle.

NOTE: All the applications shown are for the front box.

NOTE: The 812 Series with a direct mount pump flange or a universal joint larger than the 1000 series will interfere with the reverse idler bulge.

NOTE: The AK & XK output flanges can not be used with the "A" & "C" ratios on the 489 Series PTOs due to mounting stud interference. Use a RA or RB rotatable flange for the XK and the RA for the AK flange.

NOTE: 272/282 Series stated torque values on this page are for Intermittent and Continuous Duty Applications.

(1) Input Gear Part No. 5-P-1004
(2) Input Gear Part No. 5-P-1037
(4) Input Gear Part No. 5-P-1120
(5) Input Gear Part No. 5-P-1121
(8) Input Gear Part No. 5-P-1174
(15) Input Gear Part No. 5-P-1486
(16) Input Gear Part No. 5-P-1487
(17) Input Gear Part No. 5-P-634
(21) Input Gear Part No. 5-P-843
(22) Input Gear Part No. 5-P-844

Parker Hannifin Corporation
Chelsea Products Division
Olive Branch, MS 38654 USA

T2070-A (Rear Box)
T2070-B (Rear Box)
T2070-D (Rear Box)
T2080-B (Rear Box)
T2080-D (Rear Box)
T307M (Rear Box)
T308M (Rear Box)
TM308M (Rear Box)
TM309M (Rear Box)

LEFT SIDE ONLY

TRANSMISSION GEAR DATA:
L.S. 08-BOLT Opening Gear FORWARD of Centerline
49 Teeth - SPUR

PITCH LINE TO APERTURE FACE:
0.6670" (16.9400MM)

RIGHT SIDE ONLY

TRANSMISSION GEAR DATA:
R.S. 06-BOLT Opening Gear FORWARD of Centerline
49 Teeth - SPUR

PITCH LINE TO APERTURE FACE:
1.0550" (26.8000MM)

Caution: Application Approval Required for PTO Output Shaft Speeds Above 2500 RPM

LEFT Side PTO Model	Inter. Torq.	Dir. Rot.	Engine % Fwd.	Engine % Rev.	Filler Block	Adapter Assy.	Stud Kit	RIGHT Side PTO Model	Inter. Torq.	Dir. Rot.	Engine % Fwd.	Engine % Rev.	Filler Block	Adapter Assy.	Stud Kit
ONE SPEED - TWO GEAR - MECHANICAL SHIFT															
221ZCDAX-*5	250	Opp	90		7-A-062(P)	328564X	Furnished	221XCDAX-*3	250	Opp	90		7-A-032		Furnished
221ZEDAX-*5	250	Opp	100		7-A-062(P)	328564X	Furnished	221XEDAX-*3	250	Opp	100		7-A-032		Furnished
221ZLDAX-*5	200	Opp	134		7-A-062(P)	328564X	Furnished	221XLDAX-*3	200	Opp	134		7-A-032		Furnished
221ZPDAX-*5	200	Opp	162		7-A-062(P)	328564X	Furnished	221XPDAX-*3	200	Opp	162		7-A-032		Furnished
489ZADAX-*5 (9)	250	Opp	78		8-A-062		328170-190X	442ZADAX-*3 (9)	250	Opp	78		7-A-140		Furnished
489ZCDAX-*5 (10)	250	Opp	100		8-A-062		328170-190X	442ZCDAX-*3 (10)	250	Opp	100		7-A-140		Furnished
489ZFDAX-*5 (3)	250	Opp	124		8-A-062		328170-190X	442ZFDAX-*3 (3)	250	Opp	124		7-A-140		Furnished
489ZHDAX-*5 (14)	250	Opp	144		8-A-062		328170-190X	442ZHDAX-*3 (14)	250	Opp	144		7-A-140		Furnished
489ZLDAX-*5 (2)	250	Opp	161		8-A-062		328170-190X	442ZLDAX-*3 (2)	250	Opp	161		7-A-140		Furnished
489ZQDAX-*5 (2)	225	Opp	173		8-A-062		328170-190X	442ZQDAX-*3 (2)	225	Opp	173		7-A-140		Furnished
489ZRDAX-*5 (2)	225	Opp	200		8-A-062		328170-190X	442ZRDAX-*3 (2)	225	Opp	200		7-A-140		Furnished
489ZSDAX-*5 (2)	200	Opp	238		8-A-062		328170-190X	442ZSDAX-*3 (2)	200	Opp	238		7-A-140		Furnished
489ZUDAX-*5 (2)	195	Opp	284		8-A-062		328170-190X	442ZUDAX-*3 (2)	195	Opp	284		7-A-140		Furnished
489ZWDAX-*5 (2)	175	Opp	334		8-A-062		328170-190X	442ZWDAX-*3 (2)	175	Opp	334		7-A-140		Furnished
489ZXDAX-*5 (2)	140	Opp	395		8-A-062		328170-190X	442ZXDAX-*3 (2)	140	Opp	395		7-A-140		Furnished
680ZFDAX-*5 (11)	375	Opp	124		8-A-062		328170-190X	660ZFDAX-*3 (11)	375	Opp	124		7-A-140		Furnished
680ZQDAX-*5 (12)	375	Opp	173		8-A-062		328170-190X	660ZQDAX-*3 (12)	375	Opp	173		7-A-140		Furnished
680ZSDAX-*5 (13)	325	Opp	238		8-A-062		328170-190X	660ZSDAX-*3 (13)	325	Opp	238		7-A-140		Furnished
823XBDAX-*5 (16)	500	Opp	81				Furnished								
823XMDAX-*5 (17)	500	Opp	143				Furnished								
823XRDAX-*5 (18)	400	Opp	198				Furnished								
880XBDAX-*5 (4)	500	Opp	81				Furnished								
880XGDAX-*5 (8)	500	Opp	104				Furnished								
880XMDAX-*5 (5)	500	Opp	143				Furnished								
880XRDAX-*5 (6)	400	Opp	198				Furnished								
880XTDAX-*5 (7)	350	Opp	255				Furnished								
ONE SPEED - TWO GEAR POWERSHIFT (AIR OR HYDRAULIC)															
282XBDAX-*5	300	Opp	82		8-A-062		328170-190X	272XADAX-*3	300	Opp	67		7-A-032		Furnished
282XCDAX-*5	300	Opp	99		8-A-062		328170-190X	272XBDAX-*3	300	Opp	82		7-A-032		Furnished
282XDDAX-*5	300	Opp	118		8-A-062		328170-190X	272XCDAX-*3	300	Opp	99		7-A-032		Furnished
282XGDAX-*5	300	Opp	141		8-A-062		328170-190X	272XGDAX-*3	300	Opp	141		7-A-032		Furnished

Continued Next Page

CAUTION: 272*S Ratio - Contact Chelsea Engineering for application approval for continuous duty applications.

CAUTION: Do not use geared adapters with 442 "A" and "C" ratios.

CAUTION: 660/680 Series: Applications above 1500 RPM, contact Chelsea Technical Service for approval.

NOTE: On the R.H. side the 328554-2X adapter can be used with an "AH" PTO to change rotation.

NOTE: All speeds shown are with the main transmission in 5th speed. For PTO speeds with the main transmission in all other gears, divide the speeds shown by the following percentages: 1st. = 8.76, 2nd. = 5.995, 3rd. = 2.895, 4th. = 1.674, Reverse = 8.99

NOTE: The 812 Series with a direct mount pump flange or a universal joint larger than the 1000 series will interfere with the reverse idler bulge.

NOTE: The AK & XK output flanges can not be used with the "A" & "C" ratios on the 489 Series PTOs due to mounting stud interference. Use a RA or RB rotatable flange for the XK and the RA for the AK flange.

NOTE: 272/282 Series stated torque values on this page are for Intermittent and Continuous Duty Applications.

(2) Input Gear Part No. 5-P-1037
(3) Input Gear Part No. 5-P-1085
(4) Input Gear Part No. 5-P-1120
(5) Input Gear Part No. 5-P-1121
(6) Input Gear Part No. 5-P-1122
(7) Input Gear Part No. 5-P-1123
(8) Input Gear Part No. 5-P-1174
(9) Input Gear Part No. 5-P-1284
(10) Input Gear Part No. 5-P-1291
(11) Input Gear Part No. 5-P-1330
(12) Input Gear Part No. 5-P-1331
(13) Input Gear Part No. 5-P-1332
(14) Input Gear Part No. 5-P-1365
(16) Input Gear Part No. 5-P-636
(17) Input Gear Part No. 5-P-637
(18) Input Gear Part No. 5-P-808

Parker Hannifin Corporation
Chelsea Products Division
Olive Branch, MS 38654 USA

T2070-A (Rear Box)
T2070-B (Rear Box)
T2070-D (Rear Box)
T2080-B (Rear Box)
T2080-D (Rear Box)
T307M (Rear Box)
T308M (Rear Box)
TM308M (Rear Box)
TM309M (Rear Box)

LEFT SIDE ONLY

TRANSMISSION GEAR DATA:
L.S. 08-BOLT Opening Gear FORWARD of Centerline
49 Teeth - SPUR

PITCH LINE TO APERTURE FACE:
0.6670" (16.9400MM)

RIGHT SIDE ONLY

TRANSMISSION GEAR DATA:
R.S. 06-BOLT Opening Gear FORWARD of Centerline
49 Teeth - SPUR

PITCH LINE TO APERTURE FACE:
1.0550" (26.8000MM)

Caution: Application Approval Required for PTO Output Shaft Speeds Above 2500 RPM

LEFT Side PTO Model	Inter. Torq.	Dir. Rot.	Engine % Fwd.	Engine % Rev.	Filler Block	Adapter Assy.	Stud Kit	RIGHT Side PTO Model	Inter. Torq.	Dir. Rot.	Engine % Fwd.	Engine % Rev.	Filler Block	Adapter Assy.	Stud Kit
ONE SPEED - TWO GEAR POWERSHIFT (AIR OR HYDRAULIC)															
282XKDAX-*5	300	Opp	157		8-A-062		328170-190X	272XKDAX-*3	300	Opp	157		7-A-032		Furnished
282XMDAX-*5	284	Opp	176		8-A-062		328170-190X	272XMDAX-*3	284	Opp	176		7-A-032		Furnished
282XPDAX-*5	254	Opp	197		8-A-062		328170-190X	272XPDAX-*3	254	Opp	197		7-A-032		Furnished
282XSDAX-*5	227	Opp	220		8-A-062		328170-190X	272XSDAX-*3	227	Opp	220		7-A-032		Furnished
282XTDAX-*5	203	Opp	246		8-A-062		328170-190X								
ONE SPEED - TWO GEAR - POWERSHIFT (AIR)															
885XBDAX-*5 (4)	500	Opp	81				Furnished								
885XGDAX-*5 (8)	500	Opp	104				Furnished								
885XMDAX-*5 (5)	500	Opp	143				Furnished								
ONE SPEED - FORWARD & REVERSE															
348ZFDAX-*5 (15)	200	Opp	113	119	8-A-062		328170-190X	340SFDAX-*5 (15)	200	Opp	113	119	7-A-062		Furnished
863XBDAX-*5	500	Opp	81	100			Furnished	352XSAHX-*3 (1)	140	Eng	240	310		328554-2X	Furnished
GEARED ADAPTERS															
628ZDAX-5DA	250	Eng	0				Furnished	626ZDAX-3DA	250	Eng	0		7-A-062		Furnished
645ZDAX-3DA	250	Eng	0		7-A-062		Furnished	630ZDAX-3DA	250	Eng	0		7-A-062		Furnished

CAUTION: 272*S Ratio - Contact Chelsea Engineering for application approval for continuous duty applications.

CAUTION: Do not use geared adapters with 442 "A" and "C" ratios.

CAUTION: 660/680 Series: Applications above 1500 RPM, contact Chelsea Technical Service for approval.

NOTE: On the R.H. side the 328554-2X adapter can be used with an "AH" PTO to change rotation.

NOTE: All speeds shown are with the main transmission in 5th speed. For PTO speeds with the main transmission in all other gears, divide the speeds shown by the following percentages: 1st. = 8.76, 2nd. = 5.995, 3rd. = 2.895, 4th. = 1.674, Reverse = 8.99

NOTE: The 812 Series with a direct mount pump flange or a universal joint larger than the 1000 series will interfere with the reverse idler bulge.

NOTE: The AK & XK output flanges can not be used with the "A" & "C" ratios on the 489 Series PTOs due to mounting stud interference. Use a RA or RB rotatable flange for the XK and the RA for the AK flange.

NOTE: 272/282 Series stated torque values on this page are for Intermittent and Continuous Duty Applications.

(1) Input Gear Part No. 5-P-1004
(4) Input Gear Part No. 5-P-1120
(5) Input Gear Part No. 5-P-1121
(8) Input Gear Part No. 5-P-1174
(15) Input Gear Part No. 5-P-634

Parker Hannifin Corporation
Chelsea Products Division
Olive Branch, MS 38654 USA

T2180 (Rear Box)
T2180-B (Rear Box)
T318LR (Rear Box)
T318L (Rear Box)
T318LR21 (Rear Box)
T318L21 (Rear Box)
T310-M (Rear Box)
T310-MLR (Rear Box)
T310ME (Rear box, same as T310M, output flange extended for rear mount PTO)
T318 (Rear Box)

LEFT SIDE ONLY

TRANSMISSION GEAR DATA:
L.S. 08-BOLT Opening Gear FORWARD of Centerline
49 Teeth - SPUR

PITCH LINE TO APERTURE FACE:
0.6670" (16.9400MM)

RIGHT SIDE ONLY

TRANSMISSION GEAR DATA:
R.S. 06-BOLT Opening Gear FORWARD of Centerline
49 Teeth - SPUR

PITCH LINE TO APERTURE FACE:
1.0550" (26.8000MM)

Caution: Application Approval Required for PTO Output Shaft Speeds Above 2500 RPM

LEFT Side PTO Model	Inter. Torq.	Dir. Rot.	Engine % Fwd.	Engine % Rev.	Filler Block	Adapter Assy.	Stud Kit	RIGHT Side PTO Model	Inter. Torq.	Dir. Rot.	Engine % Fwd.	Engine % Rev.	Filler Block	Adapter Assy.	Stud Kit
ONE SPEED - TWO GEAR - MECHANICAL SHIFT															
221ZCDAX-*5	250	Opp	54		7-A-062(P)	328564X	Furnished	221XCDAX-*3	250	Opp	54		7-A-032		Furnished
221ZEDAX-*5	250	Opp	59		7-A-062(P)	328564X	Furnished	221XEDAX-*3	250	Opp	59		7-A-032		Furnished
221ZLDAX-*5	200	Opp	80		7-A-062(P)	328564X	Furnished	221XLDAX-*3	200	Opp	80		7-A-032		Furnished
221ZPDAX-*5	200	Opp	97		7-A-062(P)	328564X	Furnished	221XPDAX-*3	200	Opp	97		7-A-032		Furnished
489ZADAX-*5 (8)	250	Opp	47		8-A-062		328170-190X	442ZADAX-*3 (8)	250	Opp	47		7-A-140		Furnished
489ZCDAX-*5 (9)	250	Opp	60		8-A-062		328170-190X	442ZCDAX-*3 (9)	250	Opp	60		7-A-140		Furnished
489ZFDAX-*5 (2)	250	Opp	74		8-A-062		328170-190X	442ZFDAX-*3 (2)	250	Opp	74		7-A-140		Furnished
489ZHDAX-*5 (13)	250	Opp	86		8-A-062		328170-190X	442ZHDAX-*3 (13)	250	Opp	86		7-A-140		Furnished
489ZLDAX-*5 (1)	250	Opp	96		8-A-062		328170-190X	442ZLDAX-*3 (1)	250	Opp	96		7-A-140		Furnished
489ZQDAX-*5 (1)	225	Opp	103		8-A-062		328170-190X	442ZQDAX-*3 (1)	225	Opp	103		7-A-140		Furnished
489ZRDAX-*5 (1)	225	Opp	120		8-A-062		328170-190X	442ZRDAX-*3 (1)	225	Opp	120		7-A-140		Furnished
489ZSDAX-*5 (1)	200	Opp	142		8-A-062		328170-190X	442ZSDAX-*3 (1)	200	Opp	142		7-A-140		Furnished
489ZUDAX-*5 (1)	195	Opp	169		8-A-062		328170-190X	442ZUDAX-*3 (1)	195	Opp	169		7-A-140		Furnished
489ZWDAX-*5 (1)	175	Opp	199		8-A-062		328170-190X	442ZWDAX-*3 (1)	175	Opp	199		7-A-140		Furnished
489ZXDAX-*5 (1)	140	Opp	236		8-A-062		328170-190X	442ZXDAX-*3 (1)	140	Opp	236		7-A-140		Furnished
680ZFDAX-*5 (10)	375	Opp	74		8-A-062		328170-190X	660ZFDAX-*3 (10)	375	Opp	74		7-A-140		Furnished
680ZQDAX-*5 (11)	375	Opp	103		8-A-062		328170-190X	660ZQDAX-*3 (11)	375	Opp	103		7-A-140		Furnished
680ZSDAX-*5 (12)	325	Opp	142		8-A-062		328170-190X	660ZSDAX-*3 (12)	325	Opp	142		7-A-140		Furnished
823XBDAX-*5	500	Opp	48				Furnished								
823XMDAX-*5 (15)	500	Opp	86				Furnished								
823XRDAX-*5 (16)	400	Opp	118				Furnished								
880XBDAX-*5 (3)	500	Opp	48				Furnished								
880XGDAX-*5 (7)	500	Opp	62				Furnished								
880XMDAX-*5 (4)	500	Opp	86				Furnished								
880XRDAX-*5 (5)	400	Opp	118				Furnished								
880XTDAX-*5 (6)	350	Opp	152				Furnished								
ONE SPEED - TWO GEAR POWERSHIFT (AIR OR HYDRAULIC)															
282XBDAX-*5	300	Opp	49		8-A-062		Furnished	272XADAX-*3	300	Opp	40		7-A-032		Furnished
282XCDAX-*5	300	Opp	59		8-A-062		Furnished	272XBDAX-*3	300	Opp	49		7-A-032		Furnished
282XDDAX-*5	300	Opp	71		8-A-062		Furnished	272XCDAX-*3	300	Opp	59		7-A-032		Furnished
282XGDAX-*5	300	Opp	84		8-A-062		Furnished	272XDAJX-*3	300	Opp	71		7-A-032		Furnished

Continued Next Page

CAUTION: Do not use geared adapters with 442 "A" and "C" ratios.

CAUTION: 660/680 Series: Applications above 1500 RPM, contact Chelsea Technical Service for approval.

CAUTION: Mack Does Not approve PTO operations with the Range Selector in the "HI" position. Damage to the transmission synchronizers may occur. Refer to Mack operator's manual for correct PTO operation.

NOTE: This application is for the rear box only. For front box applications, see application no. MAK-23.

NOTE: With main box in reverse, the direction of rotation on the PTO output shaft will change.

NOTE: The AK & XK output flanges can not be used with the "A" & "C" ratios on the 489 Series PTOs due to mounting stud interference. Use a RA or RB rotatable flange for the XK and the RA for the AK flange.

NOTE: All speeds shown are with the transmission in 7th speed, or direct, and rear box in neutral. For speeds with main box in all the gear positions available, see the PTO speed chart on last MAK-27 page.

NOTE: 272/282 Series stated torque values on this page are for Intermittent and Continuous Duty Applications.

(1) Input Gear Part No. 5-P-1037
(2) Input Gear Part No. 5-P-1085
(3) Input Gear Part No. 5-P-1120
(4) Input Gear Part No. 5-P-1121
(5) Input Gear Part No. 5-P-1122
(6) Input Gear Part No. 5-P-1123
(7) Input Gear Part No. 5-P-1174
(8) Input Gear Part No. 5-P-1284
(9) Input Gear Part No. 5-P-1291
(10) Input Gear Part No. 5-P-1330
(11) Input Gear Part No. 5-P-1331
(12) Input Gear Part No. 5-P-1332
(13) Input Gear Part No. 5-P-1365
(15) Input Gear Part No. 5-P-637
(16) Input Gear Part No. 5-P-808

Parker Hannifin Corporation
Chelsea Products Division
Olive Branch, MS 38654 USA

T2180 (Rear Box)
T2180-B (Rear Box)
T318LR (Rear Box)
T318L (Rear Box)
T318LR21 (Rear Box)
T318L21 (Rear Box)
T310-M (Rear Box)
T310-MLR (Rear Box)
T310ME (Rear box, same as T310M, output flange extended for rear mount PTO)
T318 (Rear Box)

LEFT SIDE ONLY

TRANSMISSION GEAR DATA:
L.S. 08-BOLT Opening Gear FORWARD of Centerline
49 Teeth - SPUR

PITCH LINE TO APERTURE FACE:
0.6670" (16.9400MM)

RIGHT SIDE ONLY

TRANSMISSION GEAR DATA:
R.S. 06-BOLT Opening Gear FORWARD of Centerline
49 Teeth - SPUR

PITCH LINE TO APERTURE FACE:
1.0550" (26.8000MM)

Caution: Application Approval Required for PTO Output Shaft Speeds Above 2500 RPM

LEFT Side PTO Model	Inter. Torq.	Dir. Rot.	Engine % Fwd.	Engine % Rev.	Filler Block	Adapter Assy.	Stud Kit	RIGHT Side PTO Model	Inter. Torq.	Dir. Rot.	Engine % Fwd.	Engine % Rev.	Filler Block	Adapter Assy.	Stud Kit
ONE SPEED - TWO GEAR POWERSHIFT (AIR OR HYDRAULIC)															
282XKDAX-*5	300	Opp	94		8-A-062		Furnished	272XGDAX-*3	300	Opp	84		7-A-032		Furnished
282XMDAX-*5	300	Opp	105		8-A-062		Furnished	272XKDAX-*3	300	Opp	94		7-A-032		Furnished
282XPDAX-*5	300	Opp	117		8-A-062		Furnished	272XMDAX-*3	300	Opp	105		7-A-032		Furnished
282XSDAX-*5	300	Opp	131		8-A-062		Furnished	272XPDAX-*3	300	Opp	117		7-A-032		Furnished
282XTDAX-*5	300	Opp	147		8-A-062		Furnished	272XSDAX-*3	300	Opp	131		7-A-032		Furnished
ONE SPEED - TWO GEAR - POWERSHIFT (AIR)															
885XBDAX-*5 (3)	500	Opp	48				Furnished								
885XGDAX-*5 (7)	500	Opp	62				Furnished								
885XMDAX-*5 (4)	500	Opp	86				Furnished								
ONE SPEED - FORWARD & REVERSE															
348ZFDAX-*5 (14)	200	Opp	68	71	8-A-062		328170-190X	340SFDAX-*5 (14)	200	Opp	68	71	7-A-062		Furnished
863XBDAX-*5	500	Opp	48	60			Furnished								

Continued Next Page

CAUTION: Do not use geared adapters with 442 "A" and "C" ratios.

CAUTION: 660/680 Series: Applications above 1500 RPM, contact Chelsea Technical Service for approval.

CAUTION: Mack Does Not approve PTO operations with the Range Selector in the "HI" position. Damage to the transmission synchronizers may occur. Refer to Mack operator's manual for correct PTO operation.

NOTE: This application is for the rear box only. For front box applications, see application no. MAK-23.

NOTE: With main box in reverse, the direction of rotation on the PTO output shaft will change.

NOTE: The AK & XK output flanges can not be used with the "A" & "C" ratios on the 489 Series PTOs due to mounting stud interference. Use a RA or RB rotatable flange for the XK and the RA for the AK flange.

NOTE: All speeds shown are with the transmission in 7th speed, or direct, and rear box in neutral. For speeds with main box in all the gear positions available, see the PTO speed chart on last MAK-27 page.

NOTE: 272/282 Series stated torque values on this page are for Intermittent and Continuous Duty Applications.

(3) Input Gear Part No. 5-P-1120
(4) Input Gear Part No. 5-P-1121
(7) Input Gear Part No. 5-P-1174
(14) Input Gear Part No. 5-P-634

Parker Hannifin Corporation
Chelsea Products Division
Olive Branch, MS 38654 USA

T2180 (Rear Box)
T2180-B (Rear Box)
T318LR (Rear Box)
T318L (Rear Box)
T318LR21 (Rear Box)
T318L21 (Rear Box)
T310-M (Rear Box)
T310-MLR (Rear Box)
T310ME (Rear box, same as T310M, output flange extended for rear mount PTO)
T318 (Rear Box)

LEFT SIDE ONLY

TRANSMISSION GEAR DATA:
L.S. 08-BOLT Opening Gear FORWARD of Centerline
49 Teeth - SPUR

PITCH LINE TO APERTURE FACE:
0.6670" (16.9400MM)

RIGHT SIDE ONLY

TRANSMISSION GEAR DATA:
R.S. 06-BOLT Opening Gear FORWARD of Centerline
49 Teeth - SPUR

PITCH LINE TO APERTURE FACE:
1.0550" (26.8000MM)

Caution: Application Approval Required for PTO Output Shaft Speeds Above 2500 RPM

GEARED ADAPTERS

LEFT Side PTO Model	Inter. Torq.	Dir. Rot.	Engine % Fwd.	Engine % Rev.	Filler Block	Adapter Assy.	Stud Kit	RIGHT Side PTO Model	Inter. Torq.	Dir. Rot.	Engine % Fwd.	Engine % Rev.	Filler Block	Adapter Assy.	Stud Kit
628ZDAX-5DA	250	Eng	0		8-A-062		328170-190X	626ZDAX-3DA	250	Eng	0		7-A-140		Furnished
								645ZDAX-3DA	250	Eng	0		7-A-140		Furnished

Available PTO Output Shaft Speeds with Rear Box in Neutral

Transmission Shifter & Selection Location			Multiplication Factor	Transmission Shifter & Selection Location			Multiplication Factor
Gear Position (Main Box)	Splitter Position	Range Position		Gear Position (Main Box)	Splitter Position	Range Position	
LO	LO	LO	0.2755	5	HI	HI	0.5146
LO	HI	LO	0.3250	6	LO	HI	0.6097
1	LO	LO	0.4363	6	HI	HI	0.7197
1	HI	LO	0.5146	7	LO	HI	0.8482
2	LO	LO	0.6097	7	HI	HI	1.0000
2	HI	LO	0.7197	8	LO	HI	1.1910
3	LO	LO	0.8482	8	HI	HI	1.4040
3	HI	LO	1.0000	REV	HI	HI	0.1547
4	LO	LO	1.1910	REV	LO	HI	0.1305
4	HI	LO	1.4040	REV	LO	LO	0.1547
5	LO	HI	0.4363	REV	HI	LO	0.1305

EXAMPLE: Main Box in 4 HI LO with 442ZQDAX on Rear Box with output speed of 103% x 1.404 = 144.6%
CAUTION: PTO operations not permitted by Mack in "HI" range position (shaded area).

CAUTION: Do not use geared adapters with 442 "A" and "C" ratios.

CAUTION: 660/680 Series: Applications above 1500 RPM, contact Chelsea Technical Service for approval.

CAUTION: Mack Does Not approve PTO operations with the Range Selector in the "HI" position. Damage to the transmission synchronizers may occur. Refer to Mack operator's manual for correct PTO operation.

NOTE: This application is for the rear box only. For front box applications, see application no. MAK-23.

NOTE: With main box in reverse, the direction of rotation on the PTO output shaft will change.

NOTE: The AK & XK output flanges can not be used with the "A" & "C" ratios on the 489 Series PTOs due to mounting stud interference. Use a RA or RB rotatable flange for the XK and the RA for the AK flange.

NOTE: All speeds shown are with the transmission in 7th speed, or direct, and rear box in neutral. For speeds with main box in all the gear positions available, see the PTO speed chart on last MAK-27 page.

NOTE: 272/282 Series stated torque values on this page are for Intermittent and Continuous Duty Applications.

Parker Hannifin Corporation
Chelsea Products Division
Olive Branch, MS 38654 USA

T2130 (Rear Box)
T2130-B (Rear Box)
T313LR (Rear Box)
T313L (Rear Box)
T313L21 (Rear Box)
T313LR21 (Rear Box)
T313H (Rear Box)

LEFT SIDE ONLY

TRANSMISSION GEAR DATA:
L.S. 08-BOLT Opening Gear FORWARD of Centerline
49 Teeth - SPUR

PITCH LINE TO APERTURE FACE:
0.6670" (16.9400MM)

RIGHT SIDE ONLY

TRANSMISSION GEAR DATA:
R.S. 06-BOLT Opening Gear FORWARD of Centerline
49 Teeth - SPUR

PITCH LINE TO APERTURE FACE:
1.0550" (26.8000MM)

Caution: Application Approval Required for PTO Output Shaft Speeds Above 2500 RPM

LEFT Side PTO Model	Inter. Torq.	Dir. Rot.	Engine % Fwd.	Engine % Rev.	Filler Block	Adapter Assy.	Stud Kit	RIGHT Side PTO Model	Inter. Torq.	Dir. Rot.	Engine % Fwd.	Engine % Rev.	Filler Block	Adapter Assy.	Stud Kit
ONE SPEED - TWO GEAR - MECHANICAL SHIFT															
221ZCDAX-*5	250	Opp	45		7-A-062(P)	328564X	Furnished	221XCDAX-*3	250	Opp	45		7-A-032		Furnished
221ZEDAX-*5	250	Opp	50		7-A-062(P)	328564X	Furnished	221XEDAX-*3	250	Opp	50		7-A-032		Furnished
221ZLDAX-*5	200	Opp	68		7-A-062(P)	328564X	Furnished	221XLDAX-*3	200	Opp	68		7-A-032		Furnished
221ZPDAX-*5	200	Opp	82		7-A-062(P)	328564X	Furnished	221XPDAX-*3	200	Opp	82		7-A-032		Furnished
489ZADAX-*5 (8)	250	Opp	40		8-A-062		328170-190X	442ZADAX-*3 (8)	250	Opp	40		7-A-140		Furnished
489ZCDAX-*5 (9)	250	Opp	51		8-A-062		328170-190X	442ZCDAX-*3 (9)	250	Opp	51		7-A-140		Furnished
489ZFDAX-*5 (2)	250	Opp	63		8-A-062		328170-190X	442ZFDAX-*3 (2)	250	Opp	63		7-A-140		Furnished
489ZHDAX-*5 (13)	250	Opp	73		8-A-062		328170-190X	442ZHDAX-*3 (13)	250	Opp	73		7-A-140		Furnished
489ZLDAX-*5 (1)	250	Opp	81		8-A-062		328170-190X	442ZLDAX-*3 (1)	250	Opp	81		7-A-140		Furnished
489ZQDAX-*5 (1)	225	Opp	88		8-A-062		328170-190X	442ZQDAX-*3 (1)	225	Opp	88		7-A-140		Furnished
489ZRDAX-*5 (1)	225	Opp	101		8-A-062		328170-190X	442ZRDAX-*3 (1)	225	Opp	101		7-A-140		Furnished
489ZSDAX-*5 (1)	200	Opp	121		8-A-062		328170-190X	442ZSDAX-*3 (1)	200	Opp	121		7-A-140		Furnished
489ZUDAX-*5 (1)	195	Opp	144		8-A-062		328170-190X	442ZUDAX-*3 (1)	195	Opp	144		7-A-140		Furnished
489ZWDAX-*5 (1)	175	Opp	169		8-A-062		328170-190X	442ZWDAX-*3 (1)	175	Opp	169		7-A-140		Furnished
489ZXDAX-*5 (1)	140	Opp	200		8-A-062		328170-190X	442ZXDAX-*3 (1)	140	Opp	200		7-A-140		Furnished
680ZFDAX-*5 (10)	375	Opp	63		8-A-062		328170-190X	660ZFDAX-*3 (10)	375	Opp	63		7-A-140		Furnished
680ZQDAX-*5 (11)	375	Opp	88		8-A-062		328170-190X	660ZQDAX-*3 (11)	375	Opp	88		7-A-140		Furnished
680ZSDAX-*5 (12)	325	Opp	121		8-A-062		328170-190X	660ZSDAX-*3 (12)	325	Opp	121		7-A-140		Furnished
823XBDAX-*5 (16)	500	Opp	41				Furnished								
823XMDAX-*5 (17)	500	Opp	73				Furnished								
823XRDAX-*5 (18)	400	Opp	100				Furnished								
880XBDAX-*5 (3)	500	Opp	41				Furnished								
880XGDAX-*5 (7)	500	Opp	53				Furnished								
880XMDAX-*5 (4)	500	Opp	73				Furnished								
880XRDAX-*5 (5)	400	Opp	100				Furnished								
880XTDAX-*5 (6)	350	Opp	129				Furnished								
ONE SPEED - TWO GEAR POWERSHIFT (AIR OR HYDRAULIC)															
282KBDAX-*5	300	Opp	41		8-A-062		Furnished	272XADAX-*3	300	Opp	34		7-A-032		Furnished
282KCDAX-*5	300	Opp	50		8-A-062		Furnished	272XBDAX-*3	300	Opp	41		7-A-032		Furnished
282KDDAX-*5	300	Opp	60		8-A-062		Furnished	272XCDAX-*3	300	Opp	50		7-A-032		Furnished
282KGDAX-*5	300	Opp	71		8-A-062		Furnished	272XDAJX-*3	300	Opp	60		7-A-032		Furnished

Continued Next Page

CAUTION: Do not use geared adapters with 442 "A" and "C" ratios.

CAUTION: 660/680 Series: Applications above 1500 RPM, contact Chelsea Technical Service for approval.

NOTE: All speeds shown are with the main transmission in 4th.,10th.,or 11th speed, and rear box in neutral. For speeds with main transmission in other gears, multiply speeds shown as follows: 1st. = .323; 2nd.,6th. & 7th. = .515; 3rd.,8th., & 9th. = .720; 5th.,12th., & 13th = 1.405.

NOTE: With main box in reverse the direction of rotation on the PTO output shaft will change.

NOTE: The AK & XK output flanges can not be used with the "A" & "C" ratios on the 489 Series PTOs due to mounting stud interference. Use a RA or RB rotatable flange for the XK and the RA for the AK flange.

NOTE: 272/282 Series stated torque values on this page are for Intermittent and Continuous Duty Applications.

(1) Input Gear Part No. 5-P-1037
(2) Input Gear Part No. 5-P-1085
(3) Input Gear Part No. 5-P-1120
(4) Input Gear Part No. 5-P-1121
(5) Input Gear Part No. 5-P-1122
(6) Input Gear Part No. 5-P-1123
(7) Input Gear Part No. 5-P-1174
(8) Input Gear Part No. 5-P-1284
(9) Input Gear Part No. 5-P-1291
(10) Input Gear Part No. 5-P-1330
(11) Input Gear Part No. 5-P-1331
(12) Input Gear Part No. 5-P-1332
(13) Input Gear Part No. 5-P-1365
(16) Input Gear Part No. 5-P-636
(17) Input Gear Part No. 5-P-637
(18) Input Gear Part No. 5-P-808

Parker Hannifin Corporation
Chelsea Products Division
Olive Branch, MS 38654 USA

T2130 (Rear Box)
T2130-B (Rear Box)
T313LR (Rear Box)
T313L (Rear Box)
T313L21 (Rear Box)
T313LR21 (Rear Box)
T313H (Rear Box)

LEFT SIDE ONLY

TRANSMISSION GEAR DATA:
L.S. 08-BOLT Opening Gear FORWARD of Centerline
49 Teeth - SPUR

PITCH LINE TO APERTURE FACE:
0.6670" (16.9400MM)

RIGHT SIDE ONLY

TRANSMISSION GEAR DATA:
R.S. 06-BOLT Opening Gear FORWARD of Centerline
49 Teeth - SPUR

PITCH LINE TO APERTURE FACE:
1.0550" (26.8000MM)

Caution: Application Approval Required for PTO Output Shaft Speeds Above 2500 RPM

LEFT Side PTO Model	Inter. Torq.	Dir. Rot.	Engine % Fwd.	Engine % Rev.	Filler Block	Adapter Assy.	Stud Kit	RIGHT Side PTO Model	Inter. Torq.	Dir. Rot.	Engine % Fwd.	Engine % Rev.	Filler Block	Adapter Assy.	Stud Kit
ONE SPEED - TWO GEAR POWERSHIFT (AIR OR HYDRAULIC)															
282KKDAX-*5	300	Opp	80		8-A-062		Furnished	272XGDAX-*3	300	Opp	71		7-A-032		Furnished
282KMDAX-*5	300	Opp	89		8-A-062		Furnished	272XKDAX-*3	300	Opp	80		7-A-032		Furnished
282KPDAX-*5	300	Opp	100		8-A-062		Furnished	272XMDAX-*3	300	Opp	89		7-A-032		Furnished
282KSDAX-*5	300	Opp	111		8-A-062		Furnished	272XPDAX-*3	300	Opp	100		7-A-032		Furnished
282KTDAX-*5	300	Opp	125		8-A-062		Furnished	272XSDAX-*3	300	Opp	111		7-A-032		Furnished
ONE SPEED - TWO GEAR - POWERSHIFT (AIR)															
230XADAX-*5	250	Opp	32		7-A-062(P)	328481X	Furnished	230XADAX-*3	250	Opp	32		7-A-032		Furnished
230XBDAX-*5	250	Opp	42		7-A-062(P)	328481X	Furnished	230XBDAX-*3	250	Opp	42		7-A-032		Furnished
230XDDAX-*5	250	Opp	48		7-A-062(P)	328481X	Furnished	230XDDAX-*3	250	Opp	48		7-A-032		Furnished
230XKDAX-*5 (19)	250	Opp	65		7-A-062(P)	328481X	Furnished	230XKDAX-*3 (19)	250	Opp	65		7-A-032		Furnished
230XQDAX-*5 (20)	250	Opp	87		7-A-062(P)	328481X	Furnished	230XQDAX-*3 (20)	250	Opp	87		7-A-032		Furnished
236ZADAX-*5 (14)	250	Opp	44		7-A-032(P)	310778X	Furnished	236ZADAX-*3 (14)	250	Opp	44		7-A-140		Furnished
238ZADAX-*5 (14)	250	Opp	44		8-A-062		328170-190X	236ZDDAX-*3 (1)	250	Opp	66		7-A-140		Furnished
238ZDDAX-*5 (1)	250	Opp	66		8-A-062		328170-190X	236ZKDAX-*3 (1)	250	Opp	84		7-A-140		Furnished
238ZKDAX-*5 (1)	250	Opp	84		8-A-062		328170-190X	236ZQDAX-*3 (1)	250	Opp	113		7-A-140		Furnished
238ZQDAX-*5 (1)	250	Opp	113		8-A-062		328170-190X	236ZUDAX-*3 (1)	225	Opp	130		7-A-140		Furnished
238ZUDAX-*5 (1)	225	Opp	130		8-A-062		328170-190X								
885XBDAX-*5 (3)	500	Opp	41				Furnished								
885XGDAX-*5 (7)	500	Opp	53				Furnished								
885XMDAX-*5 (4)	500	Opp	73				Furnished								
ONE SPEED - FORWARD & REVERSE															
348ZFDAX-*5 (15)	200	Opp	57	60	8-A-032		328170-190X	340SFDAX-*5 (15)	200	Opp	57	60	7-A-062		Furnished
863XBDAX-*5	500	Opp	41	51			Furnished								
GEARED ADAPTERS															
628ZDAX-5DA	250	Eng	0		8-A-062		328170-190X	626ZDAX-3DA	250	Eng	0		7-A-140		Furnished
								645ZDAX-3DA	250	Eng	0		7-A-140		Furnished

CAUTION: Do not use geared adapters with 442 "A" and "C" ratios.

CAUTION: 660/680 Series: Applications above 1500 RPM, contact Chelsea Technical Service for approval.

NOTE: All speeds shown are with the main transmission in 4th.,10th.,or 11th speed, and rear box in neutral. For speeds with main transmission in other gears, multiply speeds shown as follows: 1st. = .323; 2nd.,6th. & 7th. = .515; 3rd.,8th., & 9th. = .720; 5th.,12th., & 13th = 1.405.

NOTE: With main box in reverse the direction of rotation on the PTO output shaft will change.

NOTE: The AK & XK output flanges can not be used with the "A" & "C" ratios on the 489 Series PTOs due to mounting stud interference. Use a RA or RB rotatable flange for the XK and the RA for the AK flange.

NOTE: 272/282 Series stated torque values on this page are for Intermittent and Continuous Duty Applications.

(1) Input Gear Part No. 5-P-1037
(3) Input Gear Part No. 5-P-1120
(4) Input Gear Part No. 5-P-1121
(7) Input Gear Part No. 5-P-1174
(14) Input Gear Part No. 5-P-1487
(15) Input Gear Part No. 5-P-634
(19) Input Gear Part No. 5-P-843
(20) Input Gear Part No. 5-P-844

Parker Hannifin Corporation
Chelsea Products Division
Olive Branch, MS 38654 USA

Mack

T2050-C
T2060-C
T2070-D (Front Box)
T2070-C
T2080-D (Front Box)
T2080-C

LEFT SIDE ONLY

TRANSMISSION GEAR DATA:
L.S. 08-BOLT Opening Gear FORWARD of Centerline
48 Teeth - SPUR

PITCH LINE TO APERTURE FACE:
0.9770" (24.8200MM)

RIGHT SIDE ONLY

TRANSMISSION GEAR DATA:
R.S. 06-BOLT Opening Gear FORWARD of Centerline
48 Teeth - SPUR

PITCH LINE TO APERTURE FACE:
1.2520" (31.8000MM)

Caution: Application Approval Required for PTO Output Shaft Speeds Above 2500 RPM

LEFT Side PTO Model	Inter. Torq.	Dir. Rot.	Engine % Fwd.	Engine % Rev.	Filler Block	Adapter Assy.	Stud Kit	RIGHT Side PTO Model	Inter. Torq.	Dir. Rot.	Engine % Fwd.	Engine % Rev.	Filler Block	Adapter Assy.	Stud Kit
ONE SPEED - TWO GEAR - MECHANICAL SHIFT															
823ZBAHX-*3 (20)	500	Opp	71		8-A-700		328170-133X	221ZCAHX-*3	250	Opp	75		7-A-062 7-A-032(25)		Furnished
823ZDAHX-*3 (23)	500	Opp	84		8-A-700		328170-133X	221ZEAHX-*3	250	Opp	86		7-A-032		Furnished
823ZGAHX-*3 (24)	500	Opp	91		8-A-700		328170-133X	221ZLAHX-*3	200	Opp	116		7-A-032		Furnished
823ZJAHX-*3 (21)	500	Opp	107		8-A-700		328170-133X	221ZPAHX-*3	200	Opp	140		7-A-032		Furnished
823ZMAHX-*3 (19)	500	Opp	126		8-A-700		328170-133X	442ZAAHX-*3 (12)	250	Opp	66		7-A-032		Furnished
823ZRAHX-*3 (22)	400	Opp	173		8-A-700		328170-133X	442ZCAHX-*3 (13)	250	Opp	84		7-A-032		Furnished
880ZBAHX-*3 (3)	500	Opp	71		8-A-700		328170-133X	442ZFAHX-*3 (2)	250	Opp	104		7-A-032		Furnished
880ZDAHX-*3 (4)	500	Opp	84		8-A-700		328170-133X	442ZHAHX-*3 (15)	250	Opp	121		7-A-032		Furnished
880ZGAHX-*3 (9)	500	Opp	91		8-A-700		328170-133X	442ZLAHX-*3 (1)	250	Opp	134		7-A-032		Furnished
880ZJAHX-*3 (5)	500	Opp	107		8-A-700		328170-133X	442ZQAHX-*3 (1)	225	Opp	145		7-A-032		Furnished
880ZMAHX-*3 (6)	500	Opp	126		8-A-700		328170-133X	442ZRAHX-*3 (1)	225	Opp	167		7-A-032		Furnished
880ZQAHX-*3 (16)	450	Opp	147		8-A-700		328170-133X	442ZSAHX-*3 (1)	200	Opp	199		7-A-032		Furnished
880ZRAHX-*3 (7)	400	Opp	173		8-A-700		328170-133X	442ZUAHX-*3 (1)	195	Opp	237		7-A-032		Furnished
880ZTAHX-*3 (8)	350	Opp	223		8-A-700		328170-133X	442ZWAHX-*3 (1)	175	Opp	279		7-A-032		Furnished
								442ZXAHX-*3 (1)	140	Opp	330		7-A-032		Furnished
								660ZFAHX-*3 (10)	375	Opp	104		7-A-032		Furnished
								660ZHAHX-*3 (15)	375	Opp	121		7-A-032		Furnished
								660ZQAHX-*3 (11)	375	Opp	145		7-A-032		Furnished
								660ZRAHX-*3 (17)	350	Opp	167		7-A-032		Furnished
								660ZSAHX-*3 (14)	325	Opp	199		7-A-032		Furnished
ONE SPEED - TWO GEAR POWERSHIFT (AIR OR HYDRAULIC)															
272ZAAJX-*5	300	Opp	53		7-A-032	328481X	Furnished	272ZAAJX-*3	300	Opp	53		7-A-032		Furnished
272ZBAJX-*5	300	Opp	65		7-A-032	328481X	Furnished	272ZBAJX-*3	300	Opp	65		7-A-032		Furnished
272ZCAJX-*5	300	Opp	79		7-A-032	328481X	Furnished	272ZCAJX-*3	300	Opp	79		7-A-032		Furnished
272ZDAJX-*5	300	Opp	95		7-A-032	328481X	Furnished	272ZDAJX-*3	300	Opp	95		7-A-032		Furnished
272ZGAJX-*5	300	Opp	113		7-A-032	328481X	Furnished	272ZGAJX-*3	300	Opp	113		7-A-032		Furnished
272ZKAJX-*5	300	Opp	126		7-A-032	328481X	Furnished	272ZKAJX-*3	300	Opp	126		7-A-032		Furnished
272ZMAJX-*5	300	Opp	141		7-A-032	328481X	Furnished	272ZMAJX-*3	300	Opp	141		7-A-032		Furnished
272ZPAJX-*5	300	Opp	157		7-A-032	328481X	Furnished	272ZPAJX-*3	300	Opp	157		7-A-032		Furnished
272ZSAJX-*5	284	Opp	176		7-A-032	328481X	Furnished	272ZSAJX-*3	284	Opp	176		7-A-032		Furnished

Continued Next Page

CAUTION: 660/680 Series: Applications above 1500 RPM output shaft speed, contact Chelsea Technical Service for approval. DO NOT use Standard Geared Adapters w/660 Series, contact Chelsea Technical Service.

NOTE: 272/282 Series stated torque values on this page are for Intermittent and Continuous Duty Applications.

(1) Input Gear Part No. 5-P-1004
(2) Input Gear Part No. 5-P-1077
(3) Input Gear Part No. 5-P-1100
(4) Input Gear Part No. 5-P-1101
(5) Input Gear Part No. 5-P-1102
(6) Input Gear Part No. 5-P-1103
(7) Input Gear Part No. 5-P-1104
(8) Input Gear Part No. 5-P-1105
(9) Input Gear Part No. 5-P-1135
(10) Input Gear Part No. 5-P-1242
(11) Input Gear Part No. 5-P-1246
(12) Input Gear Part No. 5-P-1280
(13) Input Gear Part No. 5-P-1287
(14) Input Gear Part No. 5-P-1322
(15) Input Gear Part No. 5-P-1364
(16) Input Gear Part No. 5-P-1385
(17) Input Gear Part No. 5-P-1441
(19) Input Gear Part No. 5-P-283
(20) Input Gear Part No. 5-P-285
(21) Input Gear Part No. 5-P-325
(22) Input Gear Part No. 5-P-721
(23) Input Gear Part No. 5-P-971
(24) Input Gear Part No. 5-P-980
(25) Filler block furnished with P.T.O. but not required

Parker Hannifin Corporation
Chelsea Products Division
Olive Branch, MS 38654 USA

T2050-C
T2060-C
T2070-D (Front Box)
T2070-C
T2080-D (Front Box)
T2080-C

LEFT SIDE ONLY

TRANSMISSION GEAR DATA:
L.S. 08-BOLT Opening Gear FORWARD of Centerline
48 Teeth - SPUR

PITCH LINE TO APERTURE FACE:
0.9770" (24.8200MM)

RIGHT SIDE ONLY

TRANSMISSION GEAR DATA:
R.S. 06-BOLT Opening Gear FORWARD of Centerline
48 Teeth - SPUR

PITCH LINE TO APERTURE FACE:
1.2520" (31.8000MM)

Caution: Application Approval Required for PTO Output Shaft Speeds Above 2500 RPM

LEFT Side PTO Model	Inter. Torq.	Dir. Rot.	Engine % Fwd.	Engine % Rev.	Filler Block	Adapter Assy.	Stud Kit	RIGHT Side PTO Model	Inter. Torq.	Dir. Rot.	Engine % Fwd.	Engine % Rev.	Filler Block	Adapter Assy.	Stud Kit
ONE SPEED - TWO GEAR - POWERSHIFT (AIR)															
885ZBAHX-*3 (3)	500	Opp	71		8-A-700		328170-133X	236ZAAHX-*3 (18)	250	Opp	72		7-A-032		Furnished
885ZGAHX-*3 (9)	500	Opp	91		8-A-700		328170-133X	236ZDAHX-*3 (1)	250	Opp	109		7-A-032		Furnished
885ZJAHX-*3 (5)	500	Opp	107		8-A-700		328170-133X	236ZKAHX-*3 (1)	250	Opp	139		7-A-032		Furnished
885ZMAHX-*3 (6)	500	Opp	126		8-A-700		328170-133X	236ZQAHX-*3 (1)	250	Opp	187		7-A-032		Furnished
								236ZUAHX-*3 (1)	225	Opp	215		7-A-032		Furnished
ONE SPEED - FORWARD & REVERSE															
								352ZSAHX-*3 (1)	140	Opp	202	261	7-A-032		Furnished
GEARED ADAPTERS															
								626ZDAX-3DA	250	Eng	0		(25) (25)		Furnished
								630ZDAX-3DA	250	Eng	0		(25) (25)		Furnished
								645ZDAX-3DA	250	Eng	0		(25) (25)		Furnished

CAUTION: 660/680 Series: Applications above 1500 RPM output shaft speed, contact Chelsea Technical Service for approval. DO NOT use Standard Geared Adapters w/660 Series, contact Chelsea Technical Service.

NOTE: 272/282 Series stated torque values on this page are for Intermittent and Continuous Duty Applications.

(1) Input Gear Part No. 5-P-1004
(3) Input Gear Part No. 5-P-1100
(5) Input Gear Part No. 5-P-1102
(6) Input Gear Part No. 5-P-1103
(9) Input Gear Part No. 5-P-1135
(18) Input Gear Part No. 5-P-1486
(25) Filler block furnished with P.T.O. but not required

Parker Hannifin Corporation
Chelsea Products Division
Olive Branch, MS 38654 USA

T2060-A
T306G

LEFT SIDE ONLY

TRANSMISSION GEAR DATA:
L.S. 08-BOLT Opening Gear FORWARD of Centerline
40 Teeth - SPUR

PITCH LINE TO APERTURE FACE:
1.9280" (48.9700MM)

RIGHT SIDE ONLY

TRANSMISSION GEAR DATA:
R.S. 06-BOLT Opening Gear FORWARD of Centerline
40 Teeth - SPUR

PITCH LINE TO APERTURE FACE:
2.2040" (55.9800MM)

Caution: Application Approval Required for PTO Output Shaft Speeds Above 2500 RPM

ONE SPEED - TWO GEAR - MECHANICAL SHIFT

LEFT Side PTO Model	Inter. Torq.	Dir. Rot.	Engine % Fwd.	Engine % Rev.	Filler Block	Adapter Assy.	Stud Kit	RIGHT Side PTO Model	Inter. Torq.	Dir. Rot.	Engine % Fwd.	Engine % Rev.	Filler Block	Adapter Assy.	Stud Kit
290KFHUX-*5 (1)	180	Opp	80		7-A-093(5)	328564X	7170-3X	290KFHUX-*3 (1)	180	Opp	80		7-A-270		7170-4X
290KLHUX-*5 (2)	180	Opp	94		7-A-093	328564X	7170-3X	290KLHUX-*3 (2)	180	Opp	94		7-A-270		7170-4X
290KQHUX-*5 (3)	180	Opp	124		7-A-093	328564X	7170-3X	290KQHUX-*3 (3)	180	Opp	124		7-A-270		7170-4X
290KUHUX-*5 (4)	180	Opp	149		7-A-093	328564X	7170-3X	290KUHUX-*3 (4)	180	Opp	149		7-A-270		7170-4X

NOTE: The "XK" flange cannot be used with the "L" and "U" ratio because of interference with the transmission.

(1) Input Gear Part No. 5-P-1221
(2) Input Gear Part No. 5-P-1222
(3) Input Gear Part No. 5-P-1223
(4) Input Gear Part No. 5-P-1224
(5) Filler block furnished with P.T.O.

Parker Hannifin Corporation
Chelsea Products Division
Olive Branch, MS 38654 USA

T2110-B (REAR BOX FOR T2110B)

LEFT SIDE ONLY

TRANSMISSION GEAR DATA:
L.S. 08-BOLT Opening Gear FORWARD of Centerline
49 Teeth - SPUR

PITCH LINE TO APERTURE FACE:
0.6670" (16.9400MM)

RIGHT SIDE ONLY

TRANSMISSION GEAR DATA:
R.S. 06-BOLT Opening Gear FORWARD of Centerline
49 Teeth - SPUR

PITCH LINE TO APERTURE FACE:
1.0550" (26.7970MM)

Caution: Application Approval Required for PTO Output Shaft Speeds Above 2500 RPM

LEFT Side PTO Model	Inter. Torq.	Dir. Rot.	Engine % Fwd.	Engine % Rev.	Filler Block	Adapter Assy.	Stud Kit	RIGHT Side PTO Model	Inter. Torq.	Dir. Rot.	Engine % Fwd.	Engine % Rev.	Filler Block	Adapter Assy.	Stud Kit
ONE SPEED - TWO GEAR - MECHANICAL SHIFT															
221ZCDAX-*5 (15)	250	Opp	54		7-A-062(P)	328564X	Furnished	221XCDAX-*3 (15)	250	Opp	54		7-A-032		Furnished
221ZEDAX-*5 (15)	250	Opp	59		7-A-062(P)	328564X	Furnished	221XEDAX-*3 (15)	250	Opp	59		7-A-032		Furnished
221ZLDAX-*5 (15)	200	Opp	80		7-A-062(P)	328564X	Furnished	221XLDAX-*3 (15)	200	Opp	80		7-A-032		Furnished
221ZPDAX-*5 (15)	200	Opp	97		7-A-062(P)	328564X	Furnished	221XPDAX-*3 (15)	200	Opp	97		7-A-032		Furnished
489ZFDAX-*5 (2)	250	Opp	74		8-A-062		328170-190X	442ZADAX-*3 (8)	250	Opp	47		7-A-140		Furnished
489ZHDAX-*5 (13)	250	Opp	86		8-A-062		328170-190X	442ZCDAX-*3 (9)	250	Opp	60		7-A-140		Furnished
489ZLDAX-*5 (1)	250	Opp	96		8-A-062		328170-190X	442ZFDAX-*3 (2)	250	Opp	74		7-A-140		Furnished
489ZQDAX-*5 (1)	225	Opp	103		8-A-062		328170-190X	442ZHDAX-*3 (13)	250	Opp	86		7-A-140		Furnished
489ZRDAX-*5 (1)	225	Opp	120		8-A-062		328170-190X	442ZLDAX-*3 (1)	250	Opp	96		7-A-140		Furnished
489ZSDAX-*5 (1)	200	Opp	142		8-A-062		328170-190X	442ZQDAX-*3 (1)	225	Opp	103		7-A-140		Furnished
489ZUDAX-*5 (1)	195	Opp	169		8-A-062		328170-190X	442ZRDAX-*3 (1)	225	Opp	120		7-A-140		Furnished
489ZWDAX-*5 (1)	175	Opp	199		8-A-062		328170-190X	442ZSDAX-*3 (1)	200	Opp	142		7-A-140		Furnished
489ZXDAX-*5 (1)	140	Opp	236		8-A-062		328170-190X	442ZUDAX-*3 (1)	195	Opp	169		7-A-140		Furnished
680ZFDAX-*5 (10)	375	Opp	74		8-A-062		328170-190X	442ZWDAX-*3 (1)	175	Opp	199		7-A-140		Furnished
680ZQDAX-*5 (11)	375	Opp	103		8-A-062		328170-190X	442ZXDAX-*3 (1)	140	Opp	236		7-A-140		Furnished
680ZSDAX-*5 (12)	325	Opp	142		8-A-062		328170-190X	660ZFDAX-*3 (10)	375	Opp	74		7-A-140		Furnished
823XBDAX-*5	500	Opp	48				Furnished	660ZQDAX-*3 (11)	375	Opp	103		7-A-140		Furnished
823XMDAX-*5 (17)	500	Opp	86				Furnished	660ZSDAX-*3 (12)	325	Opp	142		7-A-140		Furnished
823XRDAX-*5 (18)	400	Opp	118				Furnished								
880XBDAX-*5 (3)	500	Opp	48				Furnished								
880XGDAX-*5 (7)	500	Opp	62				Furnished								
880XMDAX-*5 (4)	500	Opp	86				Furnished								
880XRDAX-*5 (5)	400	Opp	118				Furnished								
880XTDAX-*5 (6)	350	Opp	152				Furnished								
ONE SPEED - TWO GEAR POWERSHIFT (AIR OR HYDRAULIC)															
282XBDAX-*5	300	Opp	49		8-A-062		Furnished	272XADAX-*3	300	Opp	40		7-A-032		Furnished
282XCDAX-*5	300	Opp	59		8-A-062		Furnished	272XBDAX-*3	300	Opp	49		7-A-032		Furnished
282XDDAX-*5	300	Opp	71		8-A-062		Furnished	272XCDAX-*3	300	Opp	59		7-A-032		Furnished
282XGDAX-*5	300	Opp	84		8-A-062		Furnished	272XDDAX-*3	300	Opp	71		7-A-032		Furnished
282XKDAX-*5	300	Opp	94		8-A-062		Furnished	272XGDAX-*3	300	Opp	84		7-A-032		Furnished
282XMDAX-*5	300	Opp	105		8-A-062		Furnished	272XKDAX-*3	300	Opp	94		7-A-032		Furnished

Continued Next Page

CAUTION: 660/680 Series: Applications above 1500 RPM, contact Chelsea Technical Service for approval.

NOTE: For PTO output speeds on the T2110B Main Section, see Mack application MAK-24.

NOTE: The Rear Section PTO speeds are shown with the Main Section in 5th gear or Direct and the Rear Section in Neutral.

NOTE: For all other Main Section gear shift positions use the following multiplication factors to determine your PTO output speeds: 1st gear = .255, 2nd & 7th gear = .450, 3rd & 8th gear = .590, 4th & 9th gear = .629 and 6th & 11th gear = 1.067.

NOTE: 272/282 Series stated torque values on this page are for Intermittent and Continuous Duty Applications.

(1) Input Gear Part No. 5-P-1037
(2) Input Gear Part No. 5-P-1085
(3) Input Gear Part No. 5-P-1120
(4) Input Gear Part No. 5-P-1121
(5) Input Gear Part No. 5-P-1122
(6) Input Gear Part No. 5-P-1123
(7) Input Gear Part No. 5-P-1174
(8) Input Gear Part No. 5-P-1284
(9) Input Gear Part No. 5-P-1291
(10) Input Gear Part No. 5-P-1330
(11) Input Gear Part No. 5-P-1331
(12) Input Gear Part No. 5-P-1332
(13) Input Gear Part No. 5-P-1365
(15) Input Gear Part No. 5-P-633
(17) Input Gear Part No. 5-P-637
(18) Input Gear Part No. 5-P-808

Parker Hannifin Corporation
Chelsea Products Division
Olive Branch, MS 38654 USA

T2110-B (REAR BOX FOR T2110B)

LEFT SIDE ONLY

TRANSMISSION GEAR DATA:
L.S. 08-BOLT Opening Gear FORWARD of Centerline
49 Teeth - SPUR

PITCH LINE TO APERTURE FACE:
0.6670" (16.9400MM)

RIGHT SIDE ONLY

TRANSMISSION GEAR DATA:
R.S. 06-BOLT Opening Gear FORWARD of Centerline
49 Teeth - SPUR

PITCH LINE TO APERTURE FACE:
1.0550" (26.7970MM)

Caution: Application Approval Required for PTO Output Shaft Speeds Above 2500 RPM

LEFT Side PTO Model	Inter. Torq.	Dir. Rot.	Engine % Fwd.	Engine % Rev.	Filler Block	Adapter Assy.	Stud Kit	RIGHT Side PTO Model	Inter. Torq.	Dir. Rot.	Engine % Fwd.	Engine % Rev.	Filler Block	Adapter Assy.	Stud Kit
ONE SPEED - TWO GEAR POWERSHIFT (AIR OR HYDRAULIC)															
282XPDAX-*5	300	Opp	117		8-A-062		Furnished	272XMDAX-*3	300	Opp	105		7-A-032		Furnished
282XSDAX-*5	300	Opp	131		8-A-062		Furnished	272XPDAX-*3	300	Opp	117		7-A-032		Furnished
282XTDAX-*5	300	Opp	147		8-A-062		Furnished	272XSDAX-*3	300	Opp	131		7-A-032		Furnished
ONE SPEED - TWO GEAR - POWERSHIFT (AIR)															
230XKDAX-*5 (19)	250	Opp	77		7-A-062(P)	328481X	Furnished	230XKDAX-*3 (19)	250	Opp	77		7-A-032		Furnished
230XQDAX-*5 (20)	250	Opp	102		7-A-062(P)	328481X	Furnished	230XQDAX-*3 (20)	250	Opp	102		7-A-032		Furnished
236ZADAX-*5 (14)	250	Opp	52		7-A-032(P)	310778X	Furnished	236ZADAX-*3 (14)	250	Opp	52		7-A-140		Furnished
238ZADAX-*5 (14)	250	Opp	52		8-A-062		328170-190X	236ZDDAX-*3 (1)	250	Opp	78		7-A-140		Furnished
238ZDDAX-*5 (1)	250	Opp	78		8-A-062		328170-190X	236ZKDAX-*3 (1)	250	Opp	100		7-A-140		Furnished
238ZKDAX-*5 (1)	250	Opp	100		8-A-062		328170-190X	236ZQDAX-*3 (1)	250	Opp	134		7-A-140		Furnished
238ZQDAX-*5 (1)	250	Opp	134		8-A-062		328170-190X	236ZUDAX-*3 (1)	225	Opp	153		7-A-140		Furnished
238ZUDAX-*5 (1)	225	Opp	153		8-A-062		328170-190X								
885XBDAX-*5 (3)	500	Opp	48				Furnished								
885XGDAX-*5 (7)	500	Opp	62				Furnished								
885XMDAX-*5 (4)	500	Opp	86				Furnished								
ONE SPEED - FORWARD & REVERSE															
348ZFDAX-*5 (16)	200	Eng	68	71	8-A-062		328170-190X	340SFDAX-*3 (16)	200	Opp	68	71	7-A-062		Furnished
863XBDAX-*5	500	Opp	48	60			Furnished								
GEARED ADAPTERS															
628ZDAX-5DA	250	Eng	0		8-A-062		328170-190X	626ZDAX-3DA	250	Eng	0		7-A-140		Furnished
								630ZDAX-3DA	250	Eng	0		7-A-140		Furnished
								645ZDAX-3DA	250	Eng	0		7-A-140		Furnished

CAUTION: 660/680 Series: Applications above 1500 RPM, contact Chelsea Technical Service for approval.

NOTE: For PTO output speeds on the T2110B Main Section, see Mack application MAK-24.

NOTE: The Rear Section PTO speeds are shown with the Main Section in 5th gear or Direct and the Rear Section in Neutral.

NOTE: For all other Main Section gear shift positions use the following multiplication factors to determine your PTO output speeds: 1st gear = .255, 2nd & 7th gear = .450, 3rd & 8th gear = .590, 4th & 9th gear = .629 and 6th & 11th gear = 1.067.

NOTE: 272/282 Series stated torque values on this page are for Intermittent and Continuous Duty Applications.

(1) Input Gear Part No. 5-P-1037
(3) Input Gear Part No. 5-P-1120
(4) Input Gear Part No. 5-P-1121
(7) Input Gear Part No. 5-P-1174
(14) Input Gear Part No. 5-P-1487
(16) Input Gear Part No. 5-P-634
(19) Input Gear Part No. 5-P-843
(20) Input Gear Part No. 5-P-844

Parker Hannifin Corporation
Chelsea Products Division
Olive Branch, MS 38654 USA

T310 (T310 is a standard 10 speed with no rear box)
T310-M (Front Box)
T310ME (Front box, same as T-310M, output flange extended for rear mount PTO)

LEFT SIDE ONLY

TRANSMISSION GEAR DATA:
L.S. 08-BOLT Opening Gear FORWARD of Centerline
53 Teeth - SPUR

PITCH LINE TO APERTURE FACE:
0.8100" (20.5700MM)

RIGHT SIDE ONLY

TRANSMISSION GEAR DATA:
R.S. 06-BOLT Opening Gear FORWARD of Centerline
53 Teeth - SPUR

PITCH LINE TO APERTURE FACE:
1.0800" (27.4320MM)

Caution: Application Approval Required for PTO Output Shaft Speeds Above 2500 RPM

LEFT Side PTO Model	Inter. Torq.	Dir. Rot.	Engine % Fwd.	Engine % Rev.	Filler Block	Adapter Assy.	Stud Kit	RIGHT Side PTO Model	Inter. Torq.	Dir. Rot.	Engine % Fwd.	Engine % Rev.	Filler Block	Adapter Assy.	Stud Kit
ONE SPEED - TWO GEAR - MECHANICAL SHIFT															
221ZCDAX-*5	250	Opp	66			328564X	Furnished	221XCAHX-*3	250	Eng	65		7-A-032(P)(22)	328554-2X	Furnished
221ZEDAX-*5	250	Opp	73			328564X	Furnished	221XCDAX-*3	250	Opp	66				Furnished
221ZLDAX-*5	200	Opp	98			328564X	Furnished	221XEAHX-*3	250	Eng	75			328554-2X	Furnished
221ZPDAX-*5	200	Opp	120			328564X	Furnished	221XEDAX-*3	250	Opp	73				Furnished
489ZADAX-*5 (11)	250	Opp	57				Furnished	221XLAHX-*3	200	Eng	102			328554-2X	Furnished
489ZCDAX-*5 (12)	250	Opp	74				Furnished	221XLDAX-*3	200	Opp	98				Furnished
489ZFDAX-*5 (5)	250	Opp	92				Furnished	221XPAHX-*3	200	Eng	123			328554-2X	Furnished
489ZHDAX-*5 (16)	250	Opp	107				Furnished	221XPDAX-*3	200	Opp	120				Furnished
489ZLDAX-*5 (4)	250	Opp	119				Furnished	442ZADAX-*3 (11)	250	Opp	57		7-A-093		Furnished
489ZQDAX-*5 (4)	225	Opp	128				Furnished	442ZCDAX-*3 (12)	250	Opp	74		7-A-093		Furnished
489ZRDAX-*5 (4)	225	Opp	149				Furnished	442ZFDAX-*3 (5)	250	Opp	92		7-A-093		Furnished
489ZSDAX-*5 (4)	200	Opp	178				Furnished	442ZHDAX-*3 (16)	250	Opp	107		7-A-093		Furnished
489ZUDAX-*5 (4)	195	Opp	212				Furnished	442ZLDAX-*3 (4)	250	Opp	119		7-A-093		Furnished
489ZWDAX-*5 (4)	175	Opp	250				Furnished	442ZQDAX-*3 (4)	225	Opp	128		7-A-093		Furnished
489ZXDAX-*5 (4)	140	Opp	296				Furnished	442ZRDAX-*3 (4)	225	Opp	149		7-A-093		Furnished
680ZFDAX-*5 (13)	375	Opp	92				Furnished	442ZSDAX-*3 (4)	200	Opp	178		7-A-093		Furnished
680ZQDAX-*5 (14)	375	Opp	128				Furnished	442ZUDAX-*3 (4)	195	Opp	212		7-A-093		Furnished
680ZSDAX-*5 (15)	325	Opp	178				Furnished	442ZWDAX-*3 (4)	175	Opp	250		7-A-093		Furnished
823XBDAX-*5	500	Opp	59				Furnished	442ZXDAX-*3 (4)	140	Opp	296		7-A-093		Furnished
823XMDAX-*5 (20)	500	Opp	106				Furnished	660ZFDAX-*3 (13)	375	Opp	92		7-A-062		Furnished
823XRDAX-*5 (21)	400	Opp	148				Furnished	660ZQDAX-*3 (14)	375	Opp	128		7-A-062		Furnished
880XBDAX-*5 (6)	500	Opp	59				Furnished	660ZSDAX-*3 (15)	325	Opp	178		7-A-062		Furnished
880XGDAX-*5 (10)	500	Opp	76				Furnished								
880XMDAX-*5 (7)	500	Opp	106				Furnished								
880XRDAX-*5 (8)	400	Opp	148				Furnished								
880XTDAX-*5 (9)	350	Opp	191				Furnished								
ONE SPEED - TWO GEAR POWERSHIFT (AIR OR HYDRAULIC)															
282XBDAX-*5	300	Opp	61				Furnished	272XADAX-*3	300	Opp	49				Furnished
282XCDAX-*5	300	Opp	73				Furnished	272XBDAX-*3	300	Opp	61				Furnished
282XDDAX-*5	300	Opp	88				Furnished	272XCDAX-*3	300	Opp	73				Furnished
282XGDAX-*5	300	Opp	104				Furnished	272XDDAX-*3	300	Opp	88				Furnished

Continued Next Page

CAUTION: Do not use geared adapters with 442 "A" and "C" ratios.

CAUTION: 660/680 Series: Applications above 1500 RPM, contact Chelsea Technical Service for approval.

NOTE: Using the 328554-2X adapter will permit PTO installation on trucks with set back front axle.

NOTE: The 812 Series with a direct mount pump flange or a universal joint larger than the 1000 series will interfere with the reverse idler bulge.

NOTE: The AK & XK output flanges can not be used with the "A" & "C" ratios on the 489 Series PTOs due to mounting stud interference. Use a RA or RB rotatable flange for the XK and the RA for the AK flange.

NOTE: 272/282 Series stated torque values on this page are for Intermittent and Continuous Duty Applications.

(4) Input Gear Part No. 5-P-1037
(5) Input Gear Part No. 5-P-1085
(6) Input Gear Part No. 5-P-1120
(7) Input Gear Part No. 5-P-1121
(8) Input Gear Part No. 5-P-1122
(9) Input Gear Part No. 5-P-1123
(10) Input Gear Part No. 5-P-1174
(11) Input Gear Part No. 5-P-1284
(12) Input Gear Part No. 5-P-1291
(13) Input Gear Part No. 5-P-1330
(14) Input Gear Part No. 5-P-1331
(15) Input Gear Part No. 5-P-1332
(16) Input Gear Part No. 5-P-1365
(20) Input Gear Part No. 5-P-637
(21) Input Gear Part No. 5-P-808
(22) Filler block furnished with P.T.O.

Parker Hannifin Corporation
Chelsea Products Division
Olive Branch, MS 38654 USA

T310 (T310 is a standard 10 speed with no rear box)
T310-M (Front Box)
T310ME (Front box, same as T-310M, output flange extended for rear mount PTO)

LEFT SIDE ONLY

TRANSMISSION GEAR DATA:
L.S. 08-BOLT Opening Gear FORWARD of Centerline
53 Teeth - SPUR

PITCH LINE TO APERTURE FACE:
0.8100" (20.5700MM)

RIGHT SIDE ONLY

TRANSMISSION GEAR DATA:
R.S. 06-BOLT Opening Gear FORWARD of Centerline
53 Teeth - SPUR

PITCH LINE TO APERTURE FACE:
1.0800" (27.4320MM)

Caution: Application Approval Required for PTO Output Shaft Speeds Above 2500 RPM

LEFT Side PTO Model	Inter. Torq.	Dir. Rot.	Engine % Fwd.	Engine % Rev.	Filler Block	Adapter Assy.	Stud Kit	RIGHT Side PTO Model	Inter. Torq.	Dir. Rot.	Engine % Fwd.	Engine % Rev.	Filler Block	Adapter Assy.	Stud Kit
ONE SPEED - TWO GEAR POWERSHIFT (AIR OR HYDRAULIC)															
282XKDAX-*5	300	Opp	117				Furnished	272XGDAX-*3	300	Opp	104				Furnished
282XMDAX-*5	300	Opp	130				Furnished	272XKDAX-*3	300	Opp	117				Furnished
282XPDAX-*5	300	Opp	146				Furnished	272XMDAX-*3	300	Opp	130				Furnished
282XSDAX-*5	307	Opp	163				Furnished	272XPDAX-*3	300	Opp	146				Furnished
282XTDAX-*5	274	Opp	182				Furnished	272XSDAX-*3	307	Opp	163				Furnished
ONE SPEED - TWO GEAR - POWERSHIFT (AIR)															
230XADAX-*5	250	Opp	46			328481X	Furnished	230XADAX-*3	250	Opp	46				Furnished
230XBDAX-*5	250	Opp	60			328481X	Furnished	230XBDAX-*3	250	Opp	60				Furnished
230XDDAX-*5	250	Opp	70			328481X	Furnished	230XDDAX-*3	250	Opp	70				Furnished
230XKDAX-*5 (1)	250	Opp	96			328481X	Furnished	230XKDAX-*3 (1)	250	Opp	95				Furnished
230XQDAX-*5 (2)	250	Opp	127			328481X	Furnished	230XQDAX-*3 (2)	250	Opp	127				Furnished
236ZADAX-*5 (18)	250	Opp	64		7-A-062(P)	328481X	Furnished	236XAAHX-*3 (17)	250	Eng	63		(P)	328554-2X	Furnished
238ZADAX-*5 (18)	250	Opp	64				Furnished	236XDAHX-*3 (3)	250	Eng	95			328554-2X	Furnished
238ZDDAX-*5 (4)	250	Opp	96				Furnished	236XKAHX-*3 (3)	250	Eng	123			328554-2X	Furnished
238ZKDAX-*5 (4)	250	Opp	124				Furnished	236XQAHX-*3 (3)	250	Eng	166			328554-2X	Furnished
238ZQDAX-*5 (4)	250	Opp	167				Furnished	236XUAHX-*3 (3)	225	Eng	190			328554-2X	Furnished
238ZUDAX-*5 (4)	225	Opp	192				Furnished	236ZADAX-*3 (18)	250	Opp	64		7-A-093(P)		Furnished
885XBDAX-*5 (6)	500	Opp	59				Furnished	236ZDDAX-*3 (4)	250	Opp	96		7-A-093		Furnished
885XGDAX-*5 (10)	500	Opp	76				Furnished	236ZKDAX-*3 (4)	250	Opp	124		7-A-093		Furnished
885XMDAX-*5 (7)	500	Opp	106				Furnished	236ZQDAX-*3 (4)	250	Opp	167		7-A-093		Furnished
								236ZUDAX-*3 (4)	225	Opp	192		7-A-093		Furnished
ONE SPEED - FORWARD & REVERSE															
348ZFDAX-*5 (19)	200	Opp	83	90			Furnished	340SFDAX-*5 (19)	200	Opp	83	90			Furnished
863XBDAX-*5	500	Opp	59	75			Furnished								
GEARED ADAPTERS															
628ZDAX-5DA	250	Eng	0				Furnished	626ZDAX-3DA	250	Eng	0		7-A-062		Furnished
								630ZDAX-3DA	250	Eng	0		7-A-062		Furnished
								645ZDAX-3DA	250	Eng	0		7-A-062		Furnished

CAUTION: Do not use geared adapters with 442 "A" and "C" ratios.

CAUTION: 660/680 Series: Applications above 1500 RPM, contact Chelsea Technical Service for approval.

NOTE: Using the 328554-2X adapter will permit PTO installation on trucks with set back front axle.

NOTE: The 812 Series with a direct mount pump flange or a universal joint larger than the 1000 series will interfere with the reverse idler bulge.

NOTE: The AK & XK output flanges can not be used with the "A" & "C" ratios on the 489 Series PTOs due to mounting stud interference. Use a RA or RB rotatable flange for the XK and the RA for the AK flange.

NOTE: 272/282 Series stated torque values on this page are for Intermittent and Continuous Duty Applications.

(1) Input Gear Part No. 5-P--P-843
(2) Input Gear Part No. 5-P--P-844
(3) Input Gear Part No. 5-P-1004
(4) Input Gear Part No. 5-P-1037
(6) Input Gear Part No. 5-P-1120
(7) Input Gear Part No. 5-P-1121
(10) Input Gear Part No. 5-P-1174
(17) Input Gear Part No. 5-P-1486
(18) Input Gear Part No. 5-P-1487
(19) Input Gear Part No. 5-P-634

Parker Hannifin Corporation
Chelsea Products Division
Olive Branch, MS 38654 USA

TM308
TM309

LEFT SIDE ONLY

TRANSMISSION GEAR DATA:
L.S. 08-BOLT Opening Gear REAR of Centerline
54 Teeth - SPUR

PITCH LINE TO APERTURE FACE:
0.8100" (20.5700MM)

RIGHT SIDE ONLY

TRANSMISSION GEAR DATA:
R.S. 06-BOLT Opening Gear REAR of Centerline
54 Teeth - SPUR

PITCH LINE TO APERTURE FACE:
1.0850" (27.5600MM)

Caution: Application Approval Required for PTO Output Shaft Speeds Above 2500 RPM

LEFT Side PTO Model	Inter. Torq.	Dir. Rot.	Engine % Fwd.	Engine % Rev.	Filler Block	Adapter Assy.	Stud Kit	RIGHT Side PTO Model	Inter. Torq.	Dir. Rot.	Engine % Fwd.	Engine % Rev.	Filler Block	Adapter Assy.	Stud Kit
ONE SPEED - TWO GEAR - MECHANICAL SHIFT															
442ZFDAX-*6 (2)	250	Opp	94		7-A-062(P)	328481X	Furnished	442ZFDAX-*4 (2)	250	Opp	94		7-A-062		Furnished
442ZHDAX-*6 (10)	250	Opp	109		7-A-062(P)	328481X	Furnished	442ZHDAX-*4 (10)	250	Opp	109		7-A-062		Furnished
442ZLDAX-*6 (1)	250	Opp	121		7-A-062(P)	328481X	Furnished	442ZLDAX-*4 (1)	250	Opp	121		7-A-062		Furnished
442ZQDAX-*6 (1)	225	Opp	130		7-A-062(P)	328481X	Furnished	442ZQDAX-*4 (1)	225	Opp	130		7-A-062		Furnished
489ZFDAX-*6 (2)	250	Opp	94				Furnished	660ZFDAX-*4 (8)	375	Opp	94		7-A-062		Furnished
489ZHDAX-*6 (10)	250	Opp	109				Furnished	660ZQDAX-*4 (9)	375	Opp	130		7-A-062		Furnished
489ZLDAX-*6 (1)	250	Opp	121				Furnished								
489ZQDAX-*6 (1)	225	Opp	130				Furnished								
680ZFDAX-*6 (8)	375	Opp	94				Furnished								
680ZQDAX-*6 (9)	375	Opp	130				Furnished								
880XBDAX-*6 (3)	500	Opp	61				Furnished								
880XGDAX-*6 (7)	500	Opp	78				Furnished								
880XMDAX-*6 (4)	500	Opp	108				Furnished								
880XRDAX-*6 (5)	400	Opp	150				Furnished								
880XTDAX-*6 (6)	350	Opp	193				Furnished								
ONE SPEED - TWO GEAR - POWERSHIFT (AIR)															
230XADAX-*6 (11)	250	Opp	48			328481X	Furnished	230XADAX-*4 (11)	250	Opp	48				Furnished
230XBDAX-*6 (12)	250	Opp	62			328481X	Furnished	230XBDAX-*4 (12)	250	Opp	62				Furnished
230XDDAX-*6 (13)	250	Opp	72			328481X	Furnished	230XDDAX-*4 (13)	250	Opp	72				Furnished
230XKDAX-*6 (17)	250	Opp	97			328481X	Furnished	230XKDAX-*4 (17)	250	Opp	97				Furnished
230XQDAX-*6 (18)	250	Opp	129			328481X	Furnished	230XQDAX-*4 (18)	250	Opp	129				Furnished
236ZADAX-*6 (14)	250	Opp	65		7-A-062(P)	328481X	Furnished	236ZADAX-*4 (14)	250	Opp	65		7-A-062		Furnished
238ZADAX-*6 (14)	250	Opp	65				Furnished	236ZDDAX-*4 (1)	250	Opp	98		7-A-062		Furnished
238ZDDAX-*6 (1)	250	Opp	98				Furnished								
885XBDAX-*6 (3)	500	Opp	61				Furnished								
885XGDAX-*6 (7)	500	Opp	78				Furnished								
885XMDAX-*6 (4)	500	Opp	108				Furnished								
ONE SPEED - FORWARD & REVERSE															
348ZFDAX-*4 (15)	200	Opp	85	90			Furnished	340SFDAX-*4 (15)	200	Opp	85	90			Furnished
863XBDAX-*4 (16)	500	Opp	61	75			Furnished								

Continued Next Page

CAUTION: Do not use geared adapters with 442 "A" and "C" ratios.

CAUTION: Do not install any PTO models with a sliding input gear, the input gear will not shift completely out of mesh.

CAUTION: 660/680 Series: Applications above 1500 RPM, contact Chelsea Technical Service for approval.

NOTE: The 54 tooth gear in the transmission is located rearward of the vertical center line by .320.

NOTE: The 442/489 "R", "S","U","W", "X" ratios and 880 "R" and "T" ratios cannot be mounted on this transmission because the OD of the ratio gear will interfere with the OD of the 54 tooth PTO drive gear in the transmission.

NOTE: 272/282 Series stated torque values on this page are for Intermittent and Continuous Duty Applications.

(1) Input Gear Part No. 5-P-1037
(2) Input Gear Part No. 5-P-1085
(3) Input Gear Part No. 5-P-1120
(4) Input Gear Part No. 5-P-1121
(5) Input Gear Part No. 5-P-1122
(6) Input Gear Part No. 5-P-1123
(7) Input Gear Part No. 5-P-1174
(8) Input Gear Part No. 5-P-1330
(9) Input Gear Part No. 5-P-1331
(10) Input Gear Part No. 5-P-1365
(11) Input Gear Part No. 5-P-1370
(12) Input Gear Part No. 5-P-1371
(13) Input Gear Part No. 5-P-1372
(14) Input Gear Part No. 5-P-1487
(15) Input Gear Part No. 5-P-634
(16) Input Gear Part No. 5-P-636
(17) Input Gear Part No. 5-P-843
(18) Input Gear Part No. 5-P-844

Parker Hannifin Corporation
Chelsea Products Division
Olive Branch, MS 38654 USA

TM308
TM309

LEFT SIDE ONLY

TRANSMISSION GEAR DATA:
L.S. 08-BOLT Opening Gear REAR of Centerline
54 Teeth - SPUR

PITCH LINE TO APERTURE FACE:
0.8100" (20.5700MM)

RIGHT SIDE ONLY

TRANSMISSION GEAR DATA:
R.S. 06-BOLT Opening Gear REAR of Centerline
54 Teeth - SPUR

PITCH LINE TO APERTURE FACE:
1.0850" (27.5600MM)

Caution: Application Approval Required for PTO Output Shaft Speeds Above 2500 RPM

LEFT Side PTO Model	Inter. Torq.	Dir. Rot.	Engine % Fwd.	Engine % Rev.	Filler Block	Adapter Assy.	Stud Kit	RIGHT Side PTO Model	Inter. Torq.	Dir. Rot.	Engine % Fwd.	Engine % Rev.	Filler Block	Adapter Assy.	Stud Kit
GEARED ADAPTERS															
628ZDAX-6DA	250	Eng	0				Furnished	626ZDAX-4DA	250	Eng	0				Furnished
								630ZDAX-4DA	250	Eng	0				Furnished
								645ZDAX-4DA	250	Eng	0				Furnished

CAUTION: Do not use geared adapters with 442 "A" and "C" ratios.

CAUTION: Do not install any PTO models with a sliding input gear, the input gear will not shift completely out of mesh.

CAUTION: 660/680 Series: Applications above 1500 RPM, contact Chelsea Technical Service for approval.

NOTE: The 54 tooth gear in the transmission is located rearward of the vertical center line by .320.

NOTE: The 442/489 "R", "S","U","W", "X" ratios and 880 "R" and "T" ratios cannot be mounted on this transmission because the OD of the ratio gear will interfere with the OD of the 54 tooth PTO drive gear in the transmission.

NOTE: 272/282 Series stated torque values on this page are for Intermittent and Continuous Duty Applications.

Parker Hannifin Corporation
Chelsea Products Division
Olive Branch, MS 38654 USA

TMD12AD (MDrive)

REAR SIDE ONLY

TRANSMISSION GEAR DATA:
REAR 04-BOLT Opening

PITCH LINE TO APERTURE FACE:

Caution: Application Approval Required for PTO Output Shaft Speeds Above 2500 RPM

REAR MOUNT - MECHANICAL SHIFT (12 SPEED TRANSMISSIONS)

REAR Side PTO Model	Inter. Torq.	Dir. Rot.	Engine % Fwd.	Engine % Rev.	Filler Block	Adapter Assy.	Stud Kit		Inter. Torq.	Dir. Rot.	Engine % Fwd.	Engine % Rev.	Filler Block	Adapter Assy.	Stud Kit
523XTASX-V-*	258	Eng	97			329735X	Furnished								
523XVASX-V-*	258	Eng	115			329735X	Furnished								

NOTE: All Stated Torque Ratings for the 511/523 are Good for Both Continuous and Intermittent Applications.

NOTE: Rear Mount PTO speeds are shown in Low - Multiply All Values by 1.28 for High Split

NOTE: Connection to Volvo/Mack system required for Volvo I-Shift or Mack M-Drive, the vehicle needs to be ordered with PTO prep package. Vehicle ECU must be programmed by dealer for PTO operation.

NOTE: PTO must be ordered with the "V" shift option and use the OE factory supplied in-dash PTO switch.

NOTE: 511/523 Rear Mount PTOs - The Adapter Assembly noted is furnished with the PTO.

Parker Hannifin Corporation
Chelsea Products Division
Olive Branch, MS 38654 USA

TMD12AO (MDrive)

REAR SIDE ONLY

TRANSMISSION GEAR DATA:
REAR 04-BOLT Opening

PITCH LINE TO APERTURE FACE:

Caution: Application Approval Required for PTO Output Shaft Speeds Above 2500 RPM

REAR MOUNT - MECHANICAL SHIFT (12 SPEED TRANSMISSIONS)

REAR Side PTO Model	Inter. Torq.	Dir. Rot.	Engine % Fwd.	Engine % Rev.	Filler Block	Adapter Assy.	Stud Kit		Inter. Torq.	Dir. Rot.	Engine % Fwd.	Engine % Rev.	Filler Block	Adapter Assy.	Stud Kit
523XTASX-V-*	258	Eng	124			329735X	Furnished								
523XVASX-V-*	258	Eng	148			329735X	Furnished								

NOTE: All Stated Torque Ratings for the 523 are Good for Both Continuous and Intermittent Applications.

NOTE: Connection to Volvo/Mack system required for Volvo I-Shift or Mack M-Drive, the vehicle needs to be ordered with PTO prep package. Vehicle ECU must be programmed by dealer for PTO operation.

NOTE: PTO must be ordered with the "V" shift option and use the OE factory supplied in dash PTO switch.

NOTE: 523 Rear Mounts-The adapter noted is furnished with the PTO

NOTE: Rear Mount PTO speeds are shown in Low - Multiply All Values by 1.28 for High Split

Parker Hannifin Corporation
Chelsea Products Division
Olive Branch, MS 38654 USA

NOTES



Mack

Parker Hannifin Corporation
Chelsea Products Division
Olive Branch, MS 38654 USA

MERCEDES



Parker | Chelsea

ENGINEERING YOUR SUCCESS.

Mercedes

⚠ WARNING — User Responsibility

FAILURE OR IMPROPER SELECTION OR IMPROPER USE OF THE PRODUCTS DESCRIBED HEREIN OR RELATED ITEMS CAN CAUSE DEATH, PERSONAL INJURY AND PROPERTY DAMAGE.

This document and other information from Parker-Hannifin Corporation, its subsidiaries and authorized distributors provide product or system options for further investigation by users having technical expertise.

The user, through its own analysis and testing, is solely responsible for making the final selection of the system and components and assuring that all performance, endurance, maintenance, safety and warning requirements of the application are met. The user must analyze all aspects of the application, follow applicable industry standards, and follow the information concerning the product in the current product catalog and in any other materials provided from Parker or its subsidiaries or authorized distributors.

To the extent that Parker or its subsidiaries or authorized distributors provide component or system options based upon data or specifications provided by the user, the user is responsible for determining that such data and specifications are suitable and sufficient for all applications and reasonably foreseeable uses of the components or systems.

Offer of Sale

The items described in this document are hereby offered for sale by Parker Hannifin Corporation, its subsidiaries or its authorized distributors. This offer and its acceptance are governed by the provisions stated in the "Offer of Sale".

© Copyright 2016, Parker Hannifin Corporation, All Rights Reserved

Parker Hannifin Corporation
Chelsea Products Division
Olive Branch, MS 38654 USA

Transmission Make and Model	PTO Appl. Number	Number Forward Speeds	Teeth in PTO Driver
AMT3-660-60A (Automated Manual)	M/B-6	6	R53
ATM3-520-6DA (Automated Manual)	M/B-5	6	R45
G33	M/B-7	5	R43
G56 (See DDG-2 for Dodge/Sterling/RAM Trucks)	M/B-8	6	L52
MBT520-6DA (AGS - Automated Gear Shift)	M/B-5	6	R45
MBT520S-6D	M/B-5	6	R45
MBT660-60A (AGS - Automated Gear Shift)	M/B-6	6	R53
MBT660S-60	M/B-6	6	R53

IMPORTANT: See Safety Information in Section 1 of the Chelsea Applications catalog HY25-3000/US.

Transmission PTO Driver & Apertures (Viewed from Rear of Transmission)

L-Left Side R-Right Side B-Bottom Side T-Top Side CS-Countershaft

For transmissions not listed, contact your authorized Chelsea Distributor.

Parker Hannifin Corporation
Chelsea Products Division
Olive Branch, MS 38654 USA

ATM3-520-6DA (Automated Manual)
MBT520-6DA (AGS - Automated Gear Shift)
MBT520S-6D

RIGHT SIDE ONLY

TRANSMISSION GEAR DATA:
R.S. 06-BOLT Opening Gear REAR of Centerline
45 Teeth - R.H. HELIX

PITCH LINE TO APERTURE FACE:
1.4240" (36.1696MM)

Caution: Application Approval Required for PTO Output Shaft Speeds Above 2500 RPM

	Inter. Torq.	Dir. Rot.	Engine % Fwd.	Engine % Rev.	Filler Block	Adapter Assy.	Stud Kit	RIGHT Side PTO Model	Inter. Torq.	Dir. Rot.	Engine % Fwd.	Engine % Rev.	Filler Block	Adapter Assy.	Stud Kit
ONE SPEED - TWO GEAR - MECHANICAL SHIFT															
								442ZLJGX-*4 (1)	250	Opp	54				7170-72X
								442ZQJGX-*4 (1)	225	Opp	58				7170-72X
								442ZRJGX-*4 (1)	225	Opp	67				7170-72X
								442ZSJGX-*4 (1)	200	Opp	79				7170-72X
								442ZUJGX-*4 (1)	195	Opp	95				7170-72X
								442ZWJGX-*4 (1)	175	Opp	111				7170-72X
								442ZXJGX-*4 (1)	140	Opp	132				7170-72X
ONE SPEED - TWO GEAR - POWERSHIFT (AIR)															
								236ZDJGX-*4 (1)	250	Opp	44				7170-72X
								236ZKJGX-*4 (1)	250	Opp	56				7170-72X
								236ZQJGX-*4 (1)	250	Opp	75				7170-72X
								236ZUJGX-*4 (1)	225	Opp	86				7170-72X

NOTE: PTO Rear Mount Only for G60-6. No Right Side Option.

NOTE: PTO Right Side Only for transmission models AMT3-520-6DA, MBT520-6DA and MBT520-6D. No Rear Mount Option.

(1) Input Gear Part No. 5-P-1256

Parker Hannifin Corporation
Chelsea Products Division
Olive Branch, MS 38654 USA

AMT3-660-60A (Automated Manual)
MBT660-60A (AGS - Automated Gear Shift)
MBT660S-60

RIGHT SIDE ONLY

TRANSMISSION GEAR DATA:
R.S. 06-BOLT Opening Gear REAR of Centerline
53 Teeth - R.H. HELIX

PITCH LINE TO APERTURE FACE:
1.3380" (33.9852MM)

Caution: Application Approval Required for PTO Output Shaft Speeds Above 2500 RPM

	Inter. Torq.	Dir. Rot.	Engine % Fwd.	Engine % Rev.	Filler Block	Adapter Assy.	Stud Kit	RIGHT Side PTO Model	Inter. Torq.	Dir. Rot.	Engine % Fwd.	Engine % Rev.	Filler Block	Adapter Assy.	Stud Kit
ONE SPEED - TWO GEAR - MECHANICAL SHIFT															
								442GLJHX-*4 (1)	250	Opp	84				Furnished
								442GQJHX-*4 (1)	225	Opp	90				Furnished
								442GRJHX-*4 (1)	225	Opp	104				Furnished
								442GSJHX-*4 (1)	200	Opp	124				Furnished
								442GUJHX-*4 (1)	195	Opp	148				Furnished
								442GWJHX-*4 (1)	175	Opp	174				Furnished
								442GXJHX-*4 (1)	140	Opp	206				Furnished
ONE SPEED - TWO GEAR - POWERSHIFT (AIR)															
								236GDJHX-*4 (1)	250	Opp	68				Furnished
								236GKJHX-*4 (1)	250	Opp	86				Furnished
								236GQJHX-*4 (1)	250	Opp	117				Furnished
								236GUJHX-*4 (1)	225	Opp	134				Furnished
ONE SPEED - FORWARD & REVERSE															
								352GSJHX-*4 (1)	140	Opp	126	163			Furnished

NOTE: PTO Rear Mount Only for G85-6. No Right Side Option.

NOTE: PTO Right Side Only for transmission models AMT3-660-6OA, MBTT660-6OA and MBT660S-6O. No Rear Mount Option.

(1) Input Gear Part No. 5-P-1257

Parker Hannifin Corporation
Chelsea Products Division
Olive Branch, MS 38654 USA

G33

RIGHT SIDE ONLY

TRANSMISSION GEAR DATA:
R.S. 06-BOLT Opening Gear FORWARD of Centerline
43 Teeth - R.H. HELIX

PITCH LINE TO APERTURE FACE:
0.9589" (24.3600MM)

Caution: Application Approval Required for PTO Output Shaft Speeds Above 2500 RPM

ONE SPEED - TWO GEAR - MECHANICAL SHIFT

RIGHT Side PTO Model	Inter. Torq.	Dir. Rot.	Engine % Fwd.	Engine % Rev.	Filler Block	Adapter Assy.	Stud Kit
442KLKCX-*3 (1)	250	Opp	56		7-A-165(T)		7170-79X
442KQKCX-*3 (1)	225	Opp	60		7-A-165(T)		7170-79X
442KRKCX-*3 (1)	225	Opp	69		7-A-165(T)		7170-79X
442KSKCX-*3 (1)	200	Opp	83		7-A-165(T)		7170-79X
442KUKCX-*3 (1)	195	Opp	98		7-A-165(T)		7170-79X
442KWKCX-*3 (1)	175	Opp	116		7-A-165(T)		7170-79X
442KXKCX-*3 (1)	140	Opp	137		7-A-165(T)		7170-79X

(1) Input Gear Part No. 5-P-1341

Parker Hannifin Corporation
Chelsea Products Division
Olive Branch, MS 38654 USA

G56 (See DDG-2 for Dodge/Sterling/RAM Trucks)

LEFT SIDE ONLY

TRANSMISSION GEAR DATA:
L.S. 06-BOLT Opening Gear REAR of Centerline
52 Teeth - R.H. HELIX

PITCH LINE TO APERTURE FACE:
1.3760" (35.0000MM)

Caution: Application Approval Required for PTO Output Shaft Speeds Above 2500 RPM

LEFT Side PTO Model	Inter. Torq.	Dir. Rot.	Engine % Fwd.	Engine % Rev.	Filler Block	Adapter Assy.	Stud Kit		Inter. Torq.	Dir. Rot.	Engine % Fwd.	Engine % Rev.	Filler Block	Adapter Assy.	Stud Kit
ONE SPEED - TWO GEAR - MECHANICAL SHIFT															
442LLKHX-*6 (1)	250	Opp	67				7170-72X								
442LQKHX-*6 (1)	225	Opp	72				7170-72X								
442LRKHX-*6 (1)	225	Opp	84				7170-72X								
442LSKHX-*6 (1)	200	Opp	100				7170-72X								
442LUKHX-*6 (1)	195	Opp	119				7170-72X								
442LWKHX-*6 (1)	175	Opp	140				7170-72X								
442LXKHX-*6 (1)	140	Opp	165				7170-72X								

(1) Input Gear Part No. 5-P-1343

Parker Hannifin Corporation
Chelsea Products Division
Olive Branch, MS 38654 USA

NOTES



Mercedes

Parker Hannifin Corporation
Chelsea Products Division
Olive Branch, MS 38654 USA

MITSUBISHI/FUSO

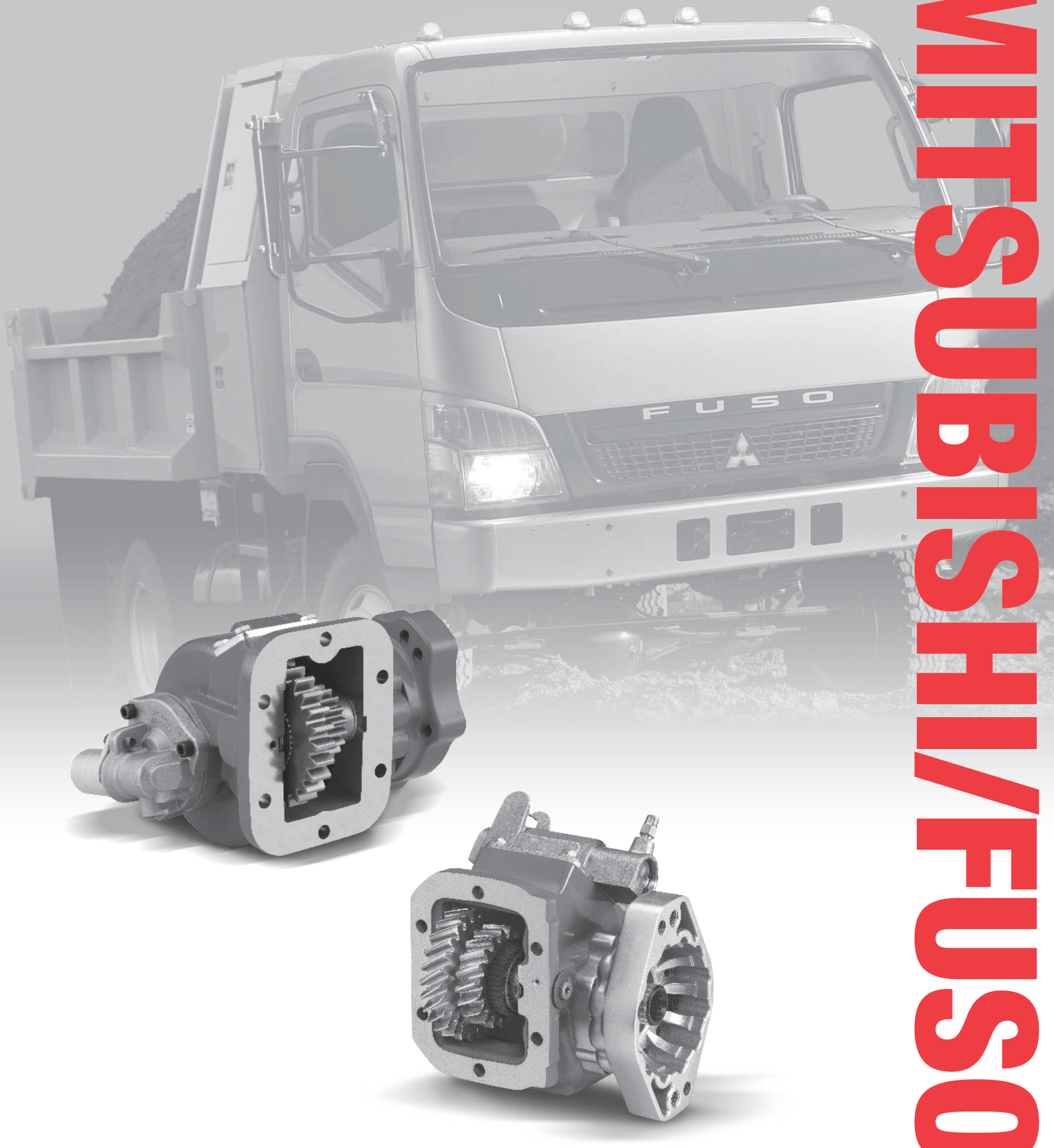

Parker Chelsea

ENGINEERING YOUR SUCCESS.

Mitsubishi/Fuso

⚠ WARNING — User Responsibility

FAILURE OR IMPROPER SELECTION OR IMPROPER USE OF THE PRODUCTS DESCRIBED HEREIN OR RELATED ITEMS CAN CAUSE DEATH, PERSONAL INJURY AND PROPERTY DAMAGE.

This document and other information from Parker-Hannifin Corporation, its subsidiaries and authorized distributors provide product or system options for further investigation by users having technical expertise.

The user, through its own analysis and testing, is solely responsible for making the final selection of the system and components and assuring that all performance, endurance, maintenance, safety and warning requirements of the application are met. The user must analyze all aspects of the application, follow applicable industry standards, and follow the information concerning the product in the current product catalog and in any other materials provided from Parker or its subsidiaries or authorized distributors.

To the extent that Parker or its subsidiaries or authorized distributors provide component or system options based upon data or specifications provided by the user, the user is responsible for determining that such data and specifications are suitable and sufficient for all applications and reasonably foreseeable uses of the components or systems.

Offer of Sale

The items described in this document are hereby offered for sale by Parker Hannifin Corporation, its subsidiaries or its authorized distributors. This offer and its acceptance are governed by the provisions stated in the "Offer of Sale".

© Copyright 2016, Parker Hannifin Corporation, All Rights Reserved

Parker Hannifin Corporation
Chelsea Products Division
Olive Branch, MS 38654 USA

Transmission Make and Model	PTO Appl. Number	Number Forward Speeds	Teeth in PTO Driver
M8S2X5 (10.060/1.0 ratio after April 1994)	MTB-5	10	L29
M8S2X5 (Before April 1, 1994)	MTB-2	10	L29
M8S5 (Model FM-557)	MTB-3	8	L28
M8S6 (7.814/.894 ratio after 4/94)(Helix Transmission/PTO Driver Gear)	MTB-4	6	L28
M8S6 (Manual)(Spur Transmission/PTO Driver Gear)	MTB-3	6	L28
MO35S5 (FE Model)	MTB-6	5	L35
MO35S6 (Same as MO35S5 except counter shaft speed is faster)	MTB-11	5	L35
MO36S5	MTB-10	5	L40
MO36S6	MTB-10	6	L40
MO38S6 (DUONIC AMT)	MTB-12	6	L44

IMPORTANT: See Safety Information in Section 1 of the Chelsea Applications catalog HY25-3000/US.

Transmission PTO Driver & Apertures (Viewed from Rear of Transmission)

L-Left Side R-Right Side B-Bottom Side T-Top Side CS-Countershaft

For transmissions not listed, contact your authorized Chelsea Distributor.

Parker Hannifin Corporation
Chelsea Products Division
Olive Branch, MS 38654 USA

M8S2X5 (Before April 1, 1994)

LEFT SIDE ONLY

TRANSMISSION GEAR DATA:
L.S. 08-BOLT Opening Gear NON-STANDARD of Centerline
29 Teeth - SPUR

PITCH LINE TO APERTURE FACE:
-1.3711" (-34.8259MM)

Caution: Application Approval Required for PTO Output Shaft Speeds Above 2500 RPM

LEFT Side PTO Model	Inter. Torq.	Dir. Rot.	Engine % Fwd.	Engine % Rev.	Filler Block	Adapter Assy.	Stud Kit		Inter. Torq.	Dir. Rot.	Engine % Fwd.	Engine % Rev.	Filler Block	Adapter Assy.	Stud Kit
ONE SPEED - TWO GEAR - MECHANICAL SHIFT															
442XFAHX-*6 (2)	250	Opp	39			329022X	Furnished								
442XHAHX-*6 (3)	250	Opp	45			329022X	Furnished								
442XLAHX-*6 (1)	250	Opp	50			329022X	Furnished								
442XQAHX-*6 (1)	225	Opp	54			329022X	Furnished								
442XRAHX-*6 (1)	225	Opp	63			329022X	Furnished								
442XSAHX-*6 (1)	200	Opp	75			329022X	Furnished								
442XUAHX-*6 (1)	195	Opp	89			329022X	Furnished								
442XWAHX-*6 (1)	175	Opp	105			329022X	Furnished								
442XXAHX-*6 (1)	140	Opp	124			329022X	Furnished								
660XHAHX-*6 (3)	375	Opp	45			329022X	Furnished								
ONE SPEED - TWO GEAR - POWERSHIFT (AIR)															
236XAAHX-*6 (4)	250	Opp	27			329022X	Furnished								
236XDAHX-*6 (1)	250	Opp	41			329022X	Furnished								
236XKAHX-*6 (1)	250	Opp	52			329022X	Furnished								
236XQAHX-*6 (1)	250	Opp	71			329022X	Furnished								
236XUAHX-*6 (1)	225	Opp	81			329022X	Furnished								
ONE SPEED - FORWARD & REVERSE															
352XSAHX-*6 (1)	140	Opp	76	98		329022X	Furnished								

NOTE: Adapter assembly shown is required to convert the non-standard opening to a standard SAE 6-bolt opening. The negative sign (-) indicates the gear protrudes beyond the aperture face.

NOTE: The PTO speeds shown are with the transmission in high range. For PTO speeds with the transmission in low range, multiply the speeds shown by 1.226.

(1) Input Gear Part No. 5-P-1004
(2) Input Gear Part No. 5-P-1077
(3) Input Gear Part No. 5-P-1364
(4) Input Gear Part No. 5-P-1486

Parker Hannifin Corporation
Chelsea Products Division
Olive Branch, MS 38654 USA

M8S5 (Model FM-557)
M8S6 (Manual)(Spur Transmission/PTO Driver Gear)

LEFT SIDE ONLY

TRANSMISSION GEAR DATA:
L.S. 08-BOLT Opening Gear NON-STANDARD of Centerline
28 Teeth - SPUR

PITCH LINE TO APERTURE FACE:
-1.2730" (-32.3340MM)

Caution: Application Approval Required for PTO Output Shaft Speeds Above 2500 RPM

LEFT Side PTO Model	Inter. Torq.	Dir. Rot.	Engine % Fwd.	Engine % Rev.	Filler Block	Adapter Assy.	Stud Kit		Inter. Torq.	Dir. Rot.	Engine % Fwd.	Engine % Rev.	Filler Block	Adapter Assy.	Stud Kit
ONE SPEED - TWO GEAR - MECHANICAL SHIFT															
442XFAHX-*6 (2)	250	Opp	38			329072X	Furnished								
442XHAHX-*6 (3)	250	Opp	44			329072X	Furnished								
442XLAHX-*6 (1)	250	Opp	49			329072X	Furnished								
442XQAHX-*6 (1)	225	Opp	53			329072X	Furnished								
442XRAHX-*6 (1)	225	Opp	61			329072X	Furnished								
442XSAHX-*6 (1)	200	Opp	73			329072X	Furnished								
442XUAHX-*6 (1)	195	Opp	87			329072X	Furnished								
442XWAHX-*6 (1)	175	Opp	102			329072X	Furnished								
442XXAHX-*6 (1)	140	Opp	121			329072X	Furnished								
660XHAHX-*6 (3)	375	Opp	44			329072X	Furnished								
ONE SPEED - TWO GEAR - POWERSHIFT (AIR)															
236XAAHX-*6 (4)	250	Opp	27			329072X	Furnished								
236XDAHX-*6 (1)	250	Opp	40			329072X	Furnished								
236XKAHX-*6 (1)	250	Opp	51			329072X	Furnished								
236XQAHX-*6 (1)	250	Opp	68			329072X	Furnished								
236XUAHX-*6 (1)	225	Opp	79			329072X	Furnished								
ONE SPEED - FORWARD & REVERSE															
352XSAHX-*6 (1)	140	Opp	74	95		329072X	Furnished								

NOTE: This is a non-standard 8-Bolt PTO aperture. The PTO driver gear protrudes above the opening by 1.273" and requires the adapter listed to convert it to a SAE 6-Bolt opening.

(1) Input Gear Part No. 5-P-1004
(2) Input Gear Part No. 5-P-1077
(3) Input Gear Part No. 5-P-1364
(4) Input Gear Part No. 5-P-1486

Parker Hannifin Corporation
Chelsea Products Division
Olive Branch, MS 38654 USA

M8S6 (7.814/.894 ratio after 4/94)(Helix Transmission/PTO Driver Gear)

LEFT SIDE ONLY

TRANSMISSION GEAR DATA:
L.S. 08-BOLT Opening Gear FORWARD of Centerline
28 Teeth - L.H. HELIX

PITCH LINE TO APERTURE FACE:
-1.2930" (-32.8422MM)

Caution: Application Approval Required for PTO Output Shaft Speeds Above 2500 RPM

LEFT Side PTO Model	Inter. Torq.	Dir. Rot.	Engine % Fwd.	Engine % Rev.	Filler Block	Adapter Assy.	Stud Kit		Inter. Torq.	Dir. Rot.	Engine % Fwd.	Engine % Rev.	Filler Block	Adapter Assy.	Stud Kit
ONE SPEED - TWO GEAR - MECHANICAL SHIFT															
442XFAHX-*6 (2)	250	Opp	38			329211X	Furnished								
442XHAHX-*6 (3)	250	Opp	44			329211X	Furnished								
442XLAHX-*6 (1)	250	Opp	49			329211X	Furnished								
442XQAHX-*6 (1)	225	Opp	53			329211X	Furnished								
442XRAHX-*6 (1)	225	Opp	61			329211X	Furnished								
442XSAHX-*6 (1)	200	Opp	73			329211X	Furnished								
442XUAHX-*6 (1)	195	Opp	87			329211X	Furnished								
442XWAHX-*6 (1)	175	Opp	102			329211X	Furnished								
442XXAHX-*6 (1)	140	Opp	121			329211X	Furnished								
660XHAHX-*6 (3)	375	Opp	44			329211X	Furnished								
ONE SPEED - TWO GEAR - POWERSHIFT (AIR)															
236XAAHX-*6 (4)	250	Opp	27			329211X	Furnished								
236XDAHX-*6 (1)	250	Opp	40			329211X	Furnished								
236XKAHX-*6 (1)	250	Opp	51			329211X	Furnished								
236XQAHX-*6 (1)	250	Opp	68			329211X	Furnished								
236XUAHX-*6 (1)	225	Opp	79			329211X	Furnished								
ONE SPEED - FORWARD & REVERSE															
352XSAHX-*6 (1)	140	Opp	74	95		329211X	Furnished								

NOTE: This is a non-standard 8-Bolt PTO aperture. The PTO driver gear protrudes above the opening by 1.293" and requires the adapter listed to convert it to a SAE 6-Bolt opening.

(1) Input Gear Part No. 5-P-1004
(2) Input Gear Part No. 5-P-1077
(3) Input Gear Part No. 5-P-1364
(4) Input Gear Part No. 5-P-1486

Parker Hannifin Corporation
Chelsea Products Division
Olive Branch, MS 38654 USA

M8S2X5 (10.060/1.0 ratio after April 1994)

LEFT SIDE ONLY

TRANSMISSION GEAR DATA:
L.S. 08-BOLT Opening Gear FORWARD of Centerline
29 Teeth - L.H. HELIX

PITCH LINE TO APERTURE FACE:
-1.3920" (-35.3568MM)

Caution: Application Approval Required for PTO Output Shaft Speeds Above 2500 RPM

LEFT Side PTO Model	Inter. Torq.	Dir. Rot.	Engine % Fwd.	Engine % Rev.	Filler Block	Adapter Assy.	Stud Kit		Inter. Torq.	Dir. Rot.	Engine % Fwd.	Engine % Rev.	Filler Block	Adapter Assy.	Stud Kit
ONE SPEED - TWO GEAR - MECHANICAL SHIFT															
442XFAHX-*6 (2)	250	Opp	39			329210X	Furnished								
442XHAHX-*6 (3)	250	Opp	45			329210X	Furnished								
442XLAHX-*6 (1)	250	Opp	50			329210X	Furnished								
442XQAHX-*6 (1)	225	Opp	54			329210X	Furnished								
442XRAHX-*6 (1)	225	Opp	63			329210X	Furnished								
442XSAHX-*6 (1)	200	Opp	75			329210X	Furnished								
442XUAHX-*6 (1)	195	Opp	89			329210X	Furnished								
442XWAHX-*6 (1)	175	Opp	105			329210X	Furnished								
442XXAHX-*6 (1)	140	Opp	124			329210X	Furnished								
660XHAHX-*6 (3)	375	Opp	45			329210X	Furnished								
ONE SPEED - TWO GEAR - POWERSHIFT (AIR)															
236XAAHX-*6 (4)	250	Opp	27			329210X	Furnished								
236XDAHX-*6 (1)	250	Opp	41			329210X	Furnished								
236XKAHX-*6 (1)	250	Opp	52			329210X	Furnished								
236XQAHX-*6 (1)	250	Opp	71			329210X	Furnished								
236XUAHX-*6 (1)	225	Opp	81			329210X	Furnished								
ONE SPEED - FORWARD & REVERSE															
352XSAHX-*6 (1)	140	Opp	76	98		329210X	Furnished								

NOTE: This is a non-standard 8-Bolt PTO aperture. The PTO driver gear protrudes above the opening by 1.392" and requires the adapter listed to convert it to a SAE 6-Bolt opening.

(1) Input Gear Part No. 5-P-1004
(2) Input Gear Part No. 5-P-1077
(3) Input Gear Part No. 5-P-1364
(4) Input Gear Part No. 5-P-1486

Parker Hannifin Corporation
Chelsea Products Division
Olive Branch, MS 38654 USA

MO35S5 (FE Model)

LEFT SIDE ONLY

TRANSMISSION GEAR DATA:
L.S. 06-BOLT Opening Gear REAR of Centerline
35 Teeth - L.H. HELIX

PITCH LINE TO APERTURE FACE:
-0.9820" (-24.9428MM)

Caution: Application Approval Required for PTO Output Shaft Speeds Above 2500 RPM

LEFT Side PTO Model	Inter. Torq.	Dir. Rot.	Engine %		Filler Block	Adapter Assy.	Stud Kit		Inter. Torq.	Dir. Rot.	Engine %		Filler Block	Adapter Assy.	Stud Kit
			Fwd.	Rev.							Fwd.	Rev.			
ONE SPEED - TWO GEAR - MECHANICAL SHIFT															
447CXHAX-*4 (1)	140	Eng	57		42-P-211(P)(2)		Furnished								

NOTE: This is a non-standard 6-Bolt PTO aperture. The PTO driver gear protrudes above the opening by .982" and requires the filler block listed to mount the 447 PTO.

(1) Input Gear Part No. 5-P-1220
(2) Filler block furnished with P.T.O.

Mitsubishi/Fuso

Parker Hannifin Corporation
Chelsea Products Division
Olive Branch, MS 38654 USA

MO36S6
MO36S5

LEFT SIDE ONLY

TRANSMISSION GEAR DATA:
L.S. 06-BOLT Opening Gear REAR of Centerline
40 Teeth - L.H. HELIX

PITCH LINE TO APERTURE FACE:
-1.4720" (-37.3880MM)

Caution: Application Approval Required for PTO Output Shaft Speeds Above 2500 RPM

LEFT Side PTO Model	Inter. Torq.	Dir. Rot.	Engine % Fwd.	Engine % Rev.	Filler Block	Adapter Assy.	Stud Kit		Inter. Torq.	Dir. Rot.	Engine % Fwd.	Engine % Rev.	Filler Block	Adapter Assy.	Stud Kit
ONE SPEED - TWO GEAR - MECHANICAL SHIFT															
447CXHAX-*4 (1)	140	Eng	72		7-A-500(P)		7170-6X								

NOTE: This is a non-standard 6-Bolt PTO aperture. The PTO driver gear protrudes above the opening by 1.472" and requires the filler block listed to mount the 447 PTO.

NOTE: The 7-A-500 spacer and 7170-6X stud kit do not come with the 447C Series and must be ordered separately. The spacer is required to go between the PTO and the adapter that is furnished with the PTO, and the stud kit is required to mount the PTO thru the spacer to the adapter.

(1) Input Gear Part No. 5-P-1220

Parker Hannifin Corporation
Chelsea Products Division
Olive Branch, MS 38654 USA

MO35S6 (Same as MO35S5 except counter shaft speed is faster)

LEFT SIDE ONLY

TRANSMISSION GEAR DATA:
L.S. 06-BOLT Opening Gear REAR of Centerline
35 Teeth - L.H. HELIX

PITCH LINE TO APERTURE FACE:
-0.9820" (-24.9428MM)

Caution: Application Approval Required for PTO Output Shaft Speeds Above 2500 RPM

LEFT Side PTO Model	Inter. Torq.	Dir. Rot.	Engine %		Filler Block	Adapter Assy.	Stud Kit		Inter. Torq.	Dir. Rot.	Engine %		Filler Block	Adapter Assy.	Stud Kit
			Fwd.	Rev.							Fwd.	Rev.			
ONE SPEED - TWO GEAR - MECHANICAL SHIFT															
447CXHAX-*4 (1)	140	Eng	69		42-P-211(P)(2)		Furnished								

NOTE: This is a non-standard 6-Bolt PTO aperture. The PTO driver gear protrudes above the opening by .982" and requires the filler block listed to mount the 447 PTO.

(1) Input Gear Part No. 5-P-1220
(2) Filler block furnished with P.T.O.

Parker Hannifin Corporation
Chelsea Products Division
Olive Branch, MS 38654 USA

MO38S6 (DUONIC AMT)

LEFT SIDE ONLY

TRANSMISSION GEAR DATA:
L.S. 06-BOLT Opening Gear REAR of Centerline
44 Teeth - L.H. HELIX

PITCH LINE TO APERTURE FACE:
-1.5960" (-40.5384MM)

Caution: Application Approval Required for PTO Output Shaft Speeds Above 2500 RPM

LEFT Side PTO Model	Inter. Torq.	Dir. Rot.	Engine % Fwd.	Engine % Rev.	Filler Block	Adapter Assy.	Stud Kit		Inter. Torq.	Dir. Rot.	Engine % Fwd.	Engine % Rev.	Filler Block	Adapter Assy.	Stud Kit
ONE SPEED - TWO GEAR - MECHANICAL SHIFT															
447CXLSX-*6 (1)	145	Eng	70		7-A-450(P)(2)	42-P-211	Furnished								

NOTE: This is a non-standard 6-Bolt PTO aperture. The PTO drive gear in this transmission protrudes above the PTO aperture face by 1.596" [40.5384mm].

NOTE: The Adapter, Spacers, and Stud Kits are Furnished with the 442C Order Option. Use (7170-98X) for the Adapter and Filler Block to the transmission and (7170-6X) for the PTO to Adapter.

(1) Input Gear Part No. 5-P-1471
(2) Filler block furnished with P.T.O.

Parker Hannifin Corporation
Chelsea Products Division
Olive Branch, MS 38654 USA

NOTES



Parker Hannifin Corporation
Chelsea Products Division
Olive Branch, MS 38654 USA

TREMEC/TTC

Parker Chelsea

ENGINEERING YOUR SUCCESS.

⚠ WARNING — User Responsibility

FAILURE OR IMPROPER SELECTION OR IMPROPER USE OF THE PRODUCTS DESCRIBED HEREIN OR RELATED ITEMS CAN CAUSE DEATH, PERSONAL INJURY AND PROPERTY DAMAGE.

This document and other information from Parker-Hannifin Corporation, its subsidiaries and authorized distributors provide product or system options for further investigation by users having technical expertise.

The user, through its own analysis and testing, is solely responsible for making the final selection of the system and components and assuring that all performance, endurance, maintenance, safety and warning requirements of the application are met. The user must analyze all aspects of the application, follow applicable industry standards, and follow the information concerning the product in the current product catalog and in any other materials provided from Parker or its subsidiaries or authorized distributors.

To the extent that Parker or its subsidiaries or authorized distributors provide component or system options based upon data or specifications provided by the user, the user is responsible for determining that such data and specifications are suitable and sufficient for all applications and reasonably foreseeable uses of the components or systems.

Offer of Sale

The items described in this document are hereby offered for sale by Parker Hannifin Corporation, its subsidiaries or its authorized distributors. This offer and its acceptance are governed by the provisions stated in the "Offer of Sale".

© Copyright 2016, Parker Hannifin Corporation, All Rights Reserved

Parker Hannifin Corporation
Chelsea Products Division
Olive Branch, MS 38654 USA

Transmission Make and Model	PTO Appl. Number	Number Forward Speeds	Teeth in PTO Driver
1010-3B (BM#301115 and Later)	SPR-105	10	R48-B48
1020-3A (BM#301125 and Later)	SPR-105	20	R48-B48
1020-5A (BM#301126 and Later)	SPR-105	20	R48-B48
1214-3A (BM#301212 & 301130 and Later)	SPR-104	14	R54-B54
1214-5A (BM#301213 & 301131 and Later)	SPR-104	14	R54-B54
1410-3B (BM#301165)	SPR-105	10	R48-B48
ASO100-10S	SPR-140	10	L45-R45
ASO10-ESP	SPR-140	10	L45-R45
ASO10-VP10	SPR-140	10	L45-R45
ASO125-10S (BM#301579)	SPR-140	10	L45-R45
ASO140-10S (BM#301580)	SPR-140	10	L45-R45
ASO150-10S (BM#301578)	SPR-140	10	L45-R45
ASO160-10S	SPR-140	10	L45-R45
ASO165-10S (BM#301581)	SPR-140	10	L45-R45
LASO125-10S (BM#301620)	SPR-140	10	L45-R45
LASO140-10S (BM#301621)	SPR-140	10	L45-R45
LASO150-10S (BM#301622)	SPR-140	10	L45-R45
LLASO125-10S	SPR-140	10	L45-R45
LLASO140-10S	SPR-140	10	L45-R45
LLASO150-10S	SPR-140	10	L45-R45
LLPSO100-10S	SPR-140	10	L45-R45
LLPSO10-VPD	SPR-140	10	L45-R45
LLPSO125-10S	SPR-140	10	L45-R45
LLPSO140-10S	SPR-140	10	L45-R45
LLPSO150-10S	SPR-140	10	L45-R45
LLPSO165-10S	SPR-140	10	L45-R45
LPSO100-10S	SPR-140	10	L45-R45
LPSO125-10S (BM#301572)	SPR-140	10	L45-R45
LPSO140-10S (BM#301573)	SPR-140	10	L45-R45
LPSO150-10S (BM#301574)	SPR-140	10	L45-R45
LPSO165-10S	SPR-140	10	L45-R45
PS86-10V (BM#301587)	SPR-144	10	L45-R45
PSDO165-18A (Released for Mexico Market)	TTC-151	18	R52-B52
PSDO185-18A (Released for Mexico Market)	TTC-151	18	R52-B52
PSDO205-18A (Released for Mexico Market)	TTC-151	18	R52-B52
PSO100-10S (BM#301560)	SPR-140	10	L45-R45

IMPORTANT: See Safety Information in Section I of the Chelsea Applications catalog HY25-3000/US.

Transmission PTO Driver & Apertures (Viewed from Rear of Transmission)

L-Left Side R-Right Side B-Bottom Side T-Top Side CS-Countershaft

For transmissions not listed, contact your authorized Chelsea Distributor.

Parker Hannifin Corporation
Chelsea Products Division
Olive Branch, MS 38654 USA

TREMEC/TTC TRANSMISSION INDEX

Transmission Make and Model	PTO Appl. Number	Number Forward Speeds	Teeth in PTO Driver
PSO10-ESP	SPR-140	10	L45-R45
PSO10-VPD	SPR-140	10	L45-R45
PSO115-10V (BM#301588)	SPR-140	10	L45-R45
PSO125-10S (BM#301561)	SPR-140	10	L45-R45
PSO125-10V (BM#301589)	SPR-140	10	L45-R45
PSO140-10S (BM#301562)	SPR-140	10	L45-R45
PSO145-10V (BM#301582)	SPR-140	10	L45-R45
PSO145-9R (BM#301625)	SPR-140	9	L45-R45
PSO150-10S (BM#301563)	SPR-140	10	L45-R45
PSO160-10S	SPR-140	10	L45-R45
PSO165-10S (BM#301564)	SPR-140	10	L45-R45
PSX150-9S (BM#301521)	SPR-140	9	L45-R45
TDET0880 (Same as TR-4050, Dodge Mexico)	TTC-150	5	R32
TDET1015 (Same as TR4050 w/ special ratio-Ford Mexico)	TTC-150	5	R32
TDET1361 (Same as TR-4050, Chev/GMC)	TTC-150	5	R32
TDET1664 (Same as TR-4050, Ford Mexico)	TTC-150	5	R32
TR-4050 (Transmission made in Mexico)	TTC-150	5	R32

IMPORTANT: See Safety Information in Section 1 of the Chelsea Applications catalog HY25-3000/US.

Transmission PTO Driver & Apertures (Viewed from Rear of Transmission)

L-Left Side R-Right Side B-Bottom Side T-Top Side CS-Countershaft

For transmissions not listed, contact your authorized Chelsea Distributor.

Parker Hannifin Corporation
Chelsea Products Division
Olive Branch, MS 38654 USA

1214-3A (BM#301212 & 301130 and Later)
1214-5A (BM#301213 & 301131 and Later)

BOTTOM SIDE ONLY

TRANSMISSION GEAR DATA:
BOT 08-BOLT Opening Gear FORWARD of Centerline
54 Teeth - SPUR

PITCH LINE TO APERTURE FACE:
0.5660" (14.3700MM)

RIGHT SIDE ONLY

TRANSMISSION GEAR DATA:
R.S. 06-BOLT Opening Gear FORWARD of Centerline
54 Teeth - SPUR

PITCH LINE TO APERTURE FACE:
0.7210" (18.3100MM)

Caution: Application Approval Required for PTO Output Shaft Speeds Above 2500 RPM

BOTTOM Side PTO Model	Inter. Torq.	Dir. Rot.	Engine % Fwd.	Engine % Rev.	Filler Block	Adapter Assy.	Stud Kit	RIGHT Side PTO Model	Inter. Torq.	Dir. Rot.	Engine % Fwd.	Engine % Rev.	Filler Block	Adapter Assy.	Stud Kit
ONE SPEED - SINGLE GEAR - MECHANICAL SHIFT															
812XKAHX-*3	400	Eng	86		8-A-165		Furnished								
ONE SPEED - TWO GEAR - MECHANICAL SHIFT															
221XCAHX-*3	250	Opp	57		7-A-032(28)	328564X	Furnished	221XCAHX-*3	250	Opp	57		7-A-350 7-A-032(28)		328170-35X
221XEAHX-*3	250	Opp	66		7-A-062(P)	310778X	Furnished	221XEAHX-*3	250	Opp	66		7-A-300		328170-35X
221XLAHX-*3	200	Opp	89		7-A-062(P)	310778X	Furnished	221XLAHX-*3	200	Opp	89		7-A-300		328170-35X
221XPAHX-*3	200	Opp	107		7-A-062(P)	310778X	Furnished	221XPAHX-*3	200	Opp	107		7-A-300		328170-35X
489XAAHX-*5 (12)	250	Opp	50		8-A-062 8-A-093		328170-8X	442KAAHX-*3 (12)	250	Opp	50		7-A-300		7170-5X
489XCAHX-*5 (13)	250	Opp	64		8-A-062 8-A-093		328170-8X	442KCAHX-*3 (13)	250	Opp	64		7-A-300		7170-5X
489XFAHX-*5 (2)	250	Opp	80		8-A-062 8-A-093		328170-8X	442KFAHX-*3 (2)	250	Opp	80		7-A-300		7170-5X
489XHAHX-*5 (15)	250	Opp	93		8-A-062 8-A-093		328170-8X	442KHAHX-*3 (15)	250	Opp	93		7-A-300		7170-5X
489XLAHX-*5 (1)	250	Opp	103		8-A-062 8-A-093		328170-8X	442KLAHX-*3 (1)	250	Opp	103		7-A-300		7170-5X
489XQAHX-*5 (1)	225	Opp	111		8-A-062 8-A-093		328170-8X	442KQAHX-*3 (1)	225	Opp	111		7-A-300		7170-5X
489XRAHX-*5 (1)	225	Opp	128		8-A-062 8-A-093		328170-8X	442KRAHX-*3 (1)	225	Opp	128		7-A-300		7170-5X
489XSAHX-*5 (1)	200	Opp	153		8-A-062 8-A-093		328170-8X	442KSAHX-*3 (1)	200	Opp	153		7-A-300		7170-5X
489XUAHX-*5 (1)	195	Opp	182		8-A-062 8-A-093		328170-8X	442KWAHX-*3 (1)	175	Opp	214		7-A-300		7170-5X
489XWAHX-*5 (1)	175	Opp	214		8-A-062 8-A-093		328170-8X	442KXAHX-*3 (1)	140	Opp	254		7-A-300		7170-5X
489XXAHX-*5 (1)	140	Opp	254		8-A-062 8-A-093		328170-8X	660KFAHX-*3 (10)	375	Opp	80		7-A-300		7170-5X
680XFAHX-*3 (10)	375	Opp	80		8-A-062 8-A-093		328170-8X	660KHAHX-*3 (15)	375	Opp	93		7-A-300		7170-5X

Continued Next Page

CAUTION: Do not use geared adapters with 442 "A" and "C" ratios.

CAUTION: 660/680 Series: Applications above 1500 RPM output shaft speed, contact Chelsea Technical Service for approval. DO NOT use Standard Geared Adapters w/660 Series, contact Chelsea Technical Service.

NOTE: Speeds shown are with transmission in high range. For speeds in low range, multiply speed shown by .84.

NOTE: The AK & XK output flanges can not be used with the "A" & "C" ratios on the 489 Series PTOs due to mounting stud interference. Use a RA or RB rotatable flange for the XK and the RA for the AK flange.

NOTE: 272/282 Series stated torque values on this page are for Intermittent and Continuous Duty Applications.

(1) Input Gear Part No. 5-P-1004
(2) Input Gear Part No. 5-P-1077
(10) Input Gear Part No. 5-P-1242
(12) Input Gear Part No. 5-P-1280
(13) Input Gear Part No. 5-P-1287
(15) Input Gear Part No. 5-P-1364
(28) Filler block furnished with P.T.O. but not required

Parker Hannifin Corporation
Chelsea Products Division
Olive Branch, MS 38654 USA

1214-3A (BM#301212 & 301130 and Later)
1214-5A (BM#301213 & 301131 and Later)

BOTTOM SIDE ONLY

TRANSMISSION GEAR DATA:
BOT 08-BOLT Opening Gear FORWARD of Centerline
54 Teeth - SPUR

PITCH LINE TO APERTURE FACE:
0.5660" (14.3700MM)

RIGHT SIDE ONLY

TRANSMISSION GEAR DATA:
R.S. 06-BOLT Opening Gear FORWARD of Centerline
54 Teeth - SPUR

PITCH LINE TO APERTURE FACE:
0.7210" (18.3100MM)

Caution: Application Approval Required for PTO Output Shaft Speeds Above 2500 RPM

BOTTOM Side PTO Model	Inter. Torq.	Dir. Rot.	Engine % Fwd.	Engine % Rev.	Filler Block	Adapter Assy.	Stud Kit	RIGHT Side PTO Model	Inter. Torq.	Dir. Rot.	Engine % Fwd.	Engine % Rev.	Filler Block	Adapter Assy.	Stud Kit
ONE SPEED - TWO GEAR - MECHANICAL SHIFT															
680XHAHX-*3 (19)	375	Opp	93		8-A-062 8-A-093		328170-8X	660KQAHX-*3 (11)	375	Opp	111		7-A-300		7170-5X
680XQAHX-*3 (11)	375	Opp	111		8-A-062 8-A-093		328170-8X	660KRAHX-*3 (17)	350	Opp	128		7-A-300		7170-5X
680XRAHX-*3 (17)	350	Opp	128		8-A-062 8-A-093		328170-8X	660KSAHX-*3 (14)	325	Opp	153		7-A-300		7170-5X
680XSAHX-*3 (14)	325	Opp	153		8-A-062 8-A-093		328170-8X								
823XBAHX-*3 (21)	500	Opp	54		8-A-165		328170-14X								
823XDAHX-*3 (25)	500	Opp	64		8-A-165		328170-14X								
823XGAHX-*3 (26)	500	Opp	70		8-A-165		328170-14X								
823XJAHX-*3 (22)	500	Opp	82		8-A-165		328170-14X								
823XMAHX-*3 (20)	500	Opp	96		8-A-165		328170-14X								
823XRAHX-*3 (24)	400	Opp	133		8-A-165		328170-14X								
880XBAHX-*3 (3)	500	Opp	54		8-A-165		328170-14X								
880XDAHX-*3 (4)	500	Opp	64		8-A-165		328170-14X								
880XGAHX-*3 (9)	500	Opp	70		8-A-165		328170-14X								
880XJAHX-*3 (5)	500	Opp	82		8-A-165		328170-14X								
880XMAHX-*3 (6)	500	Opp	96		8-A-165		328170-14X								
880XQAHX-*3 (16)	450	Opp	113		8-A-165		328170-14X								
880XRAHX-*3 (7)	400	Opp	133		8-A-165		328170-14X								
880XTAHX-*3 (8)	350	Opp	171		8-A-165		328170-14X								
ONE SPEED - TWO GEAR POWERSHIFT (AIR OR HYDRAULIC)															
282XBAJX-*3	300	Opp	54		8-A-248		328170-8X	272XAAJX-*3	300	Opp	44		7-A-300		328170-172X
282XCAJX-*3	300	Opp	66		8-A-248		328170-8X	272XBAJX-*3	300	Opp	54		7-A-300		328170-172X
282XDAJX-*3	300	Opp	78		8-A-248		328170-8X	272XCAJX-*3	300	Opp	66		7-A-300		328170-172X
282XGAJX-*3	300	Opp	93		8-A-248		328170-8X	272XDAJX-*3	300	Opp	78		7-A-300		328170-172X
282XKAJX-*3	274	Opp	104		8-A-248		328170-8X	272XGAJX-*3	300	Opp	93		7-A-300		328170-172X
282XMAJX-*3	245	Opp	117		8-A-248		328170-8X	272XKAJX-*3	300	Opp	104		7-A-300		328170-172X
282XPAJX-*3	219	Opp	130		8-A-248		328170-8X	272XMAJX-*3	300	Opp	117		7-A-300		328170-172X

Continued Next Page

CAUTION: Do not use geared adapters with 442 "A" and "C" ratios.

CAUTION: 660/680 Series: Applications above 1500 RPM output shaft speed, contact Chelsea Technical Service for approval. DO NOT use Standard Geared Adapters w/660 Series, contact Chelsea Technical Service.

NOTE: Speeds shown are with transmission in high range. For speeds in low range, multiply speed shown by .84.

NOTE: The AK & XK output flanges can not be used with the "A" & "C" ratios on the 489 Series PTOs due to mounting stud interference. Use a RA or RB rotatable flange for the XK and the RA for the AK flange.

NOTE: 272/282 Series stated torque values on this page are for Intermittent and Continuous Duty Applications.

(3) Input Gear Part No. 5-P-1100
(4) Input Gear Part No. 5-P-1101
(5) Input Gear Part No. 5-P-1102
(6) Input Gear Part No. 5-P-1103
(7) Input Gear Part No. 5-P-1104
(8) Input Gear Part No. 5-P-1105
(9) Input Gear Part No. 5-P-1135
(11) Input Gear Part No. 5-P-1246
(14) Input Gear Part No. 5-P-1322
(16) Input Gear Part No. 5-P-1385
(17) Input Gear Part No. 5-P-1441
(19) Input Gear Part No. 5-P-1494
(20) Input Gear Part No. 5-P-283
(21) Input Gear Part No. 5-P-285
(22) Input Gear Part No. 5-P-325
(24) Input Gear Part No. 5-P-721
(25) Input Gear Part No. 5-P-971
(26) Input Gear Part No. 5-P-980

Parker Hannifin Corporation
Chelsea Products Division
Olive Branch, MS 38654 USA

1214-3A (BM#301212 & 301130 and Later)
1214-5A (BM#301213 & 301131 and Later)

BOTTOM SIDE ONLY

TRANSMISSION GEAR DATA:
BOT 08-BOLT Opening Gear FORWARD of Centerline
54 Teeth - SPUR

PITCH LINE TO APERTURE FACE:
0.5660" (14.3700MM)

RIGHT SIDE ONLY

TRANSMISSION GEAR DATA:
R.S. 06-BOLT Opening Gear FORWARD of Centerline
54 Teeth - SPUR

PITCH LINE TO APERTURE FACE:
0.7210" (18.3100MM)

Caution: Application Approval Required for PTO Output Shaft Speeds Above 2500 RPM

BOTTOM Side PTO Model	Inter. Torq.	Dir. Rot.	Engine % Fwd.	Engine % Rev.	Filler Block	Adapter Assy.	Stud Kit	RIGHT Side PTO Model	Inter. Torq.	Dir. Rot.	Engine % Fwd.	Engine % Rev.	Filler Block	Adapter Assy.	Stud Kit
ONE SPEED - TWO GEAR POWERSHIFT (AIR OR HYDRAULIC)															
282XSAJX-*3	196	Opp	146		8-A-248		328170-8X	272XPAJX-*3	300	Opp	130		7-A-300		328170-172X
282XTAJX-*3	175	Opp	163		8-A-248		328170-8X	272XSAJX-*3	300	Opp	146		7-A-300		328170-172X
ONE SPEED - TWO GEAR - POWERSHIFT (AIR)															
230XAAJX-*3	250	Opp	42			328564X	Furnished	230XAAJX-*3	250	Opp	42		7-A-300		328170-172X
230XBAJX-*3	250	Opp	54			328564X	Furnished	230XBAJX-*3	250	Opp	54		7-A-300		328170-172X
230XDAJX-*3	250	Opp	63			328564X	Furnished	230XDAJX-*3	250	Opp	63		7-A-300		328170-172X
230XKAJX-*3	250	Opp	85			328564X	Furnished	230XKAJX-*3	250	Opp	85		7-A-300		328170-172X
230XQAJX-*3	250	Opp	113			328564X	Furnished	230XQAJX-*3	250	Opp	113		7-A-300		328170-172X
230XUAJX-*3	225	Opp	181			328564X	Furnished	230XUAJX-*3	225	Opp	181		7-A-300		328170-172X
236XAAHX-*3 (18)	250	Opp	55		7-A-062(P)	310778X	Furnished	236KAAHX-*3 (18)	250	Opp	55		7-A-300		7170-5X
238KAAHX-*3 (18)	250	Opp	55		8-A-062(P) 8-A-093		328170-8X	236KDAHX-*3 (1)	250	Opp	83		7-A-300		7170-5X
238KDAHX-*3 (1)	250	Opp	83		8-A-062 8-A-093		328170-8X	236KKAHX-*3 (1)	250	Opp	106		7-A-300		7170-5X
238KKAHX-*3 (1)	250	Eng	106		8-A-062 8-A-093		328170-8X	236KQAHX-*3 (1)	250	Opp	144		7-A-300		7170-5X
238KQAHX-*3 (1)	250	Opp	144		8-A-062 8-A-093		328170-8X	236KUAHX-*3 (1)	225	Opp	165		7-A-300		7170-5X
238KUAHX-*3 (1)	225	Opp	165		8-A-062 8-A-093		328170-8X								
885XBAHX-*3 (3)	500	Opp	54		8-A-165		328170-14X								
885XGAHX-*3 (9)	500	Opp	70		8-A-165		328170-14X								
885XJAHX-*3 (5)	500	Opp	82		8-A-165		328170-14X								
885XMAHX-*3 (6)	500	Opp	96		8-A-165		328170-14X								
ONE SPEED - FORWARD & REVERSE															
348KFAHX-*5 (23)	200	Opp	70	73	8-A-190		328170-8X	340XFAHX-*5 (23)	200	Opp	70	73	7-A-140(27) 7-A-270		7170-5X
352XSAHX-*3 (1)	140	Opp	155	200	7-A-062(P)	310778X	Furnished	352XSAHX-*3 (1)	140	Opp	155	200	7-A-300		7170-5X
863XBAHX-*5	500	Opp	54	67	8-A-165		328170-14X								

Continued Next Page

CAUTION: Do not use geared adapters with 442 "A" and "C" ratios.

CAUTION: 660/680 Series: Applications above 1500 RPM output shaft speed, contact Chelsea Technical Service for approval. DO NOT use Standard Geared Adapters w/660 Series, contact Chelsea Technical Service.

NOTE: Speeds shown are with transmission in high range. For speeds in low range, multiply speed shown by .84.

NOTE: The AK & XK output flanges can not be used with the "A" & "C" ratios on the 489 Series PTOs due to mounting stud interference. Use a RA or RB rotatable flange for the XK and the RA for the AK flange.

NOTE: 272/282 Series stated torque values on this page are for Intermittent and Continuous Duty Applications.

(1) Input Gear Part No. 5-P-1004
(3) Input Gear Part No. 5-P-1100
(5) Input Gear Part No. 5-P-1102
(6) Input Gear Part No. 5-P-1103
(9) Input Gear Part No. 5-P-1135
(18) Input Gear Part No. 5-P-1486
(23) Input Gear Part No. 5-P-581
(27) Filler block furnished with P.T.O.

Parker Hannifin Corporation
Chelsea Products Division
Olive Branch, MS 38654 USA

1214-3A (BM#301212 & 301130 and Later)
1214-5A (BM#301213 & 301131 and Later)

BOTTOM SIDE ONLY

TRANSMISSION GEAR DATA:
BOT 08-BOLT Opening Gear FORWARD of Centerline
54 Teeth - SPUR

PITCH LINE TO APERTURE FACE:
0.5660" (14.3700MM)

RIGHT SIDE ONLY

TRANSMISSION GEAR DATA:
R.S. 06-BOLT Opening Gear FORWARD of Centerline
54 Teeth - SPUR

PITCH LINE TO APERTURE FACE:
0.7210" (18.3100MM)

Caution: Application Approval Required for PTO Output Shaft Speeds Above 2500 RPM

BOTTOM Side PTO Model	Inter. Torq.	Dir. Rot.	Engine %		Filler Block	Adapter Assy.	Stud Kit	RIGHT Side PTO Model	Inter. Torq.	Dir. Rot.	Engine %		Filler Block	Adapter Assy.	Stud Kit
			Fwd.	Rev.							Fwd.	Rev.			
GEARED ADAPTERS															
628XAHX-3AH	250	Eng	0		8-A-190		328170-8X	626KAHX-4AH	250	Eng	0		7-A-300		7170-5X
								630KAHX-3AH	250	Eng	0		7-A-300		7170-5X
								645KAHX-3AH	250	Eng	0		7-A-300		7170-5X

CAUTION: Do not use geared adapters with 442 "A" and "C" ratios.

CAUTION: 660/680 Series: Applications above 1500 RPM output shaft speed, contact Chelsea Technical Service for approval. DO NOT use Standard Geared Adapters w/660 Series, contact Chelsea Technical Service.

NOTE: Speeds shown are with transmission in high range. For speeds in low range, multiply speed shown by .84.

NOTE: The AK & XK output flanges can not be used with the "A" & "C" ratios on the 489 Series PTOs due to mounting stud interference. Use a RA or RB rotatable flange for the XK and the RA for the AK flange.

NOTE: 272/282 Series stated torque values on this page are for Intermittent and Continuous Duty Applications.

Parker Hannifin Corporation
Chelsea Products Division
Olive Branch, MS 38654 USA

1010-3B (BM#301115 and Later)
1020-3A (BM#301125 and Later)
1020-5A (BM#301126 and Later)
1410-3B (BM#301165)

BOTTOM SIDE ONLY

TRANSMISSION GEAR DATA:
BOT 08-BOLT Opening Gear FORWARD of Centerline
48 Teeth - SPUR

PITCH LINE TO APERTURE FACE:
1.0660" (27.0800MM)

RIGHT SIDE ONLY

TRANSMISSION GEAR DATA:
R.S. 06-BOLT Opening Gear FORWARD of Centerline
48 Teeth - SPUR

PITCH LINE TO APERTURE FACE:
1.2210" (31.0100MM)

Caution: Application Approval Required for PTO Output Shaft Speeds Above 2500 RPM

BOTTOM Side PTO Model	Inter. Torq.	Dir. Rot.	Engine % Fwd.	Engine % Rev.	Filler Block	Adapter Assy.	Stud Kit	RIGHT Side PTO Model	Inter. Torq.	Dir. Rot.	Engine % Fwd.	Engine % Rev.	Filler Block	Adapter Assy.	Stud Kit
ONE SPEED - TWO GEAR - MECHANICAL SHIFT															
221ZCAHX-*3	250	Opp	56		7-A-062(P) 7-A-032(25)	328481X	Furnished	221ZCAHX-*3	250	Opp	56		7-A-165 7-A-032(25)		328170-1X
221ZEAHX-*3	250	Opp	64		7-A-032(P)	328481X	Furnished	221ZEAHX-*3	250	Opp	64		7-A-140		328170-1X
221ZLAHX-*3	200	Opp	86		7-A-032(P)	328481X	Furnished	221ZLAHX-*3	200	Opp	86		7-A-140		328170-1X
221ZPAHX-*3	200	Opp	104		7-A-032(P)	328481X	Furnished	221ZPAHX-*3	200	Opp	104		7-A-140		328170-1X
823ZBAHX-*3 (19)	500	Opp	53		8-A-700		328170-133X	442LAAHX-*3 (11)	250	Opp	49		7-A-140		328170-76X
823ZDAHX-*3 (23)	500	Opp	62		8-A-700		328170-133X	442LCAHX-*3 (12)	250	Opp	63		7-A-140		328170-76X
823ZGAHX-*3 (24)	500	Opp	68		8-A-700		328170-133X	442LFAHX-*3 (2)	250	Opp	77		7-A-140		328170-76X
823ZJAHX-*3 (20)	500	Opp	80		8-A-700		328170-133X	442LHAHX-*3 (14)	250	Opp	89		7-A-140		328170-76X
823ZMAHX-*3 (18)	500	Opp	94		8-A-700		328170-133X	442LLAHX-*3 (1)	250	Opp	100		7-A-140		328170-76X
823ZRAHX-*3 (22)	400	Opp	129		8-A-700		328170-133X	442LQAHX-*3 (1)	225	Opp	108		7-A-140		328170-76X
880ZBAHX-*3 (3)	500	Opp	53		8-A-700		328170-133X	442LRAHX-*3 (1)	225	Opp	125		7-A-140		328170-76X
880ZDAHX-*3 (4)	500	Opp	62		8-A-700		328170-133X	442LSAHX-*3 (1)	200	Opp	149		7-A-140		328170-76X
880ZGAHX-*3 (8)	500	Opp	68		8-A-700		328170-133X	442LUAHX-*3 (1)	195	Opp	177		7-A-140		328170-76X
880ZJAHX-*3 (5)	500	Opp	80		8-A-700		328170-133X	442LWAHX-*3 (1)	175	Opp	209		7-A-140		328170-76X
880ZMAHX-*3 (6)	500	Opp	94		8-A-700		328170-133X	442LXAHX-*3 (1)	140	Opp	247		7-A-140		328170-76X
880ZQAHX-*3 (15)	450	Opp	109		8-A-700		328170-133X	660LFAHX-*3 (9)	375	Opp	77		7-A-140		328170-76X
880ZRAHX-*3 (7)	400	Opp	129		8-A-700		328170-133X	660LHAHX-*3 (14)	375	Opp	89		7-A-140		328170-76X
								660LQAHX-*3 (10)	375	Opp	108		7-A-140		328170-76X
								660LRAHX-*3 (16)	350	Opp	125		7-A-140		328170-76X
								660LSAHX-*3 (13)	325	Opp	149		7-A-140		328170-76X
ONE SPEED - TWO GEAR POWERSHIFT (AIR OR HYDRAULIC)															
282XBAJX-*3	300	Opp	53				Furnished	272XAAJX-*3	300	Opp	43				Furnished
282XCAJX-*3	300	Opp	64				Furnished	272XBAJX-*3	300	Opp	53				Furnished
282XDAJX-*3	300	Opp	76				Furnished	272XCAJX-*3	300	Opp	64				Furnished
282XGAJX-*3	300	Opp	91				Furnished	272XDAJX-*3	300	Opp	76				Furnished
282XKAJX-*3	300	Opp	102				Furnished	272XGAJX-*3	300	Opp	91				Furnished
282XMAJX-*3	275	Opp	114				Furnished	272XKAJX-*3	300	Opp	102				Furnished
282XPAJX-*3	246	Opp	246				Furnished	272XMAJX-*3	300	Opp	114				Furnished
282XSAJX-*3	220	Opp	142				Furnished	272XPAJX-*3	300	Opp	246				Furnished
282XTAJX-*3	197	Opp	159				Furnished	272XSAJX-*3	300	Opp	142				Furnished

Continued Next Page

CAUTION: Do not use geared adapters with 442 "A" and "C" ratios.

CAUTION: 660/680 Series: Applications above 1500 RPM output shaft speed, contact Chelsea Technical Service for approval. DO NOT use Standard Geared Adapters w/660 Series, contact Chelsea Technical Service.

NOTE: PTO speeds shown are with transmission in low range - for speeds in high range multiply speeds shown by 1.28.

NOTE: 272/282 Series stated torque values on this page are for Intermittent and Continuous Duty Applications.

(1) Input Gear Part No. 5-P-1004
(2) Input Gear Part No. 5-P-1077
(3) Input Gear Part No. 5-P-1100
(4) Input Gear Part No. 5-P-1101
(5) Input Gear Part No. 5-P-1102
(6) Input Gear Part No. 5-P-1103
(7) Input Gear Part No. 5-P-1104
(8) Input Gear Part No. 5-P-1135
(9) Input Gear Part No. 5-P-1242
(10) Input Gear Part No. 5-P-1246
(11) Input Gear Part No. 5-P-1280
(12) Input Gear Part No. 5-P-1287
(13) Input Gear Part No. 5-P-1322
(14) Input Gear Part No. 5-P-1364
(15) Input Gear Part No. 5-P-1385
(16) Input Gear Part No. 5-P-1441
(18) Input Gear Part No. 5-P-283
(19) Input Gear Part No. 5-P-285
(20) Input Gear Part No. 5-P-325
(22) Input Gear Part No. 5-P-721
(23) Input Gear Part No. 5-P-971
(24) Input Gear Part No. 5-P-980
(25) Filler block furnished with P.T.O. but not required

Parker Hannifin Corporation
Chelsea Products Division
Olive Branch, MS 38654 USA

1010-3B (BM#301115 and Later)
1020-3A (BM#301125 and Later)
1020-5A (BM#301126 and Later)
1410-3B (BM#301165)

BOTTOM SIDE ONLY

TRANSMISSION GEAR DATA:
BOT 08-BOLT Opening Gear FORWARD of Centerline
48 Teeth - SPUR

PITCH LINE TO APERTURE FACE:
1.0660" (27.0800MM)

RIGHT SIDE ONLY

TRANSMISSION GEAR DATA:
R.S. 06-BOLT Opening Gear FORWARD of Centerline
48 Teeth - SPUR

PITCH LINE TO APERTURE FACE:
1.2210" (31.0100MM)

Caution: Application Approval Required for PTO Output Shaft Speeds Above 2500 RPM

BOTTOM Side PTO Model	Inter. Torq.	Dir. Rot.	Engine % Fwd.	Engine % Rev.	Filler Block	Adapter Assy.	Stud Kit	RIGHT Side PTO Model	Inter. Torq.	Dir. Rot.	Engine % Fwd.	Engine % Rev.	Filler Block	Adapter Assy.	Stud Kit
ONE SPEED - TWO GEAR - POWERSHIFT (AIR)															
236ZAAHX-*3 (17)	250	Opp	54		7-A-032(P)	328481X	Furnished	236LAAHX-*3 (17)	250	Opp	54		7-A-140		328170-76X
236ZDAHX-*3 (1)	250	Opp	81		7-A-032(P)	328481X	Furnished	236LDAHX-*3 (1)	250	Opp	81		7-A-140		328170-76X
236ZKAHX-*3 (1)	250	Opp	104		7-A-032(P)	328481X	Furnished	236LKAHX-*3 (1)	250	Opp	104		7-A-140		328170-76X
236ZQAHX-*3 (1)	250	Opp	140		7-A-032(P)	328481X	Furnished	236LQAHX-*3 (1)	250	Opp	140		7-A-140		328170-76X
236ZUAHX-*3 (1)	225	Opp	161		7-A-032(P)	328481X	Furnished	236LUAHX-*3 (1)	225	Opp	161		7-A-140		328170-76X
885ZBAHX-*3 (3)	500	Opp	53		8-A-700		328170-133X								
885ZGAHX-*3 (8)	500	Opp	68		8-A-700		328170-133X								
885ZJAHX-*3 (5)	500	Opp	80		8-A-700		328170-133X								
885ZMAHX-*3 (6)	500	Opp	94		8-A-700		328170-133X								
ONE SPEED - FORWARD & REVERSE															
352ZSAHX-*3 (1)	140	Opp	151	195	7-A-032(P)	328481X	Furnished	340SFAHX-*5 (21)	200	Opp	68	71	7-A-062		328170-94X
								352ZSAHX-*3 (1)	140	Opp	151	195	7-A-140		328170-76X

CAUTION: Do not use geared adapters with 442 "A" and "C" ratios.

CAUTION: 660/680 Series: Applications above 1500 RPM output shaft speed, contact Chelsea Technical Service for approval. DO NOT use Standard Geared Adapters w/660 Series, contact Chelsea Technical Service.

NOTE: PTO speeds shown are with transmission in low range - for speeds in high range multiply speeds shown by 1.28.

NOTE: 272/282 Series stated torque values on this page are for Intermittent and Continuous Duty Applications.

(1) Input Gear Part No. 5-P-1004
(3) Input Gear Part No. 5-P-1100
(5) Input Gear Part No. 5-P-1102
(6) Input Gear Part No. 5-P-1103
(8) Input Gear Part No. 5-P-1135
(17) Input Gear Part No. 5-P-1486
(21) Input Gear Part No. 5-P-581

Parker Hannifin Corporation
Chelsea Products Division
Olive Branch, MS 38654 USA

ASO10-ESP
ASO10-VP10
ASO100-10S
ASO125-10S (BM#301579)
ASO140-10S (BM#301580)
ASO150-10S (BM#301578)
ASO160-10S
ASO165-10S (BM#301581)
LASO125-10S (BM#301620)
LASO140-10S (BM#301621)
LASO150-10S (BM#301622)
LLASO125-10S
LLASO140-10S
LLASO150-10S
LLPSO10-VPD
LLPSO100-10S
LLPSO125-10S
LLPSO140-10S
LLPSO150-10S
LLPSO165-10S
LPSO100-10S
LPSO125-10S (BM#301572)
LPSO140-10S (BM#301573)
LPSO150-10S (BM#301574)

LEFT SIDE ONLY

TRANSMISSION GEAR DATA:
L.S. 08-BOLT Opening Gear FORWARD of Centerline
45 Teeth - SPUR

PITCH LINE TO APERTURE FACE:
0.7300" (18.5420MM)

RIGHT SIDE ONLY

TRANSMISSION GEAR DATA:
R.S. 06-BOLT Opening Gear REAR of Centerline
45 Teeth - SPUR

PITCH LINE TO APERTURE FACE:
1.0750" (27.3050MM)

Caution: Application Approval Required for PTO Output Shaft Speeds Above 2500 RPM

LEFT Side PTO Model	Inter. Torq.	Dir. Rot.	Engine % Fwd.	Engine % Rev.	Filler Block	Adapter Assy.	Stud Kit	RIGHT Side PTO Model	Inter. Torq.	Dir. Rot.	Engine % Fwd.	Engine % Rev.	Filler Block	Adapter Assy.	Stud Kit
ONE SPEED - TWO GEAR - MECHANICAL SHIFT															
221XCAHX-*5	250	Opp	71		7-A-062 7-A-032(29)	328481X	Furnished	221XCAHX-*4	250	Opp	71		7-A-062 7-A-032(29)		Furnished
221XEAHX-*5	250	Opp	82			328481X	Furnished	221XEAHX-*4	250	Opp	82				Furnished
221XLAHX-*5	200	Opp	110			328481X	Furnished	221XLAHX-*4	200	Opp	110				Furnished
221XPAHX-*5	200	Opp	133			328481X	Furnished	221XPAHX-*4	200	Opp	133				Furnished
489XAAHX-*5 (12)	250	Opp	62				Furnished	442XFAHX-*4 (2)	250	Opp	98				Furnished
489XCAHX-*5 (13)	250	Opp	80				Furnished	442XHAHX-*4 (15)	250	Opp	114				Furnished
489XFAHX-*5 (2)	250	Opp	98				Furnished	442XLAHX-*4 (1)	250	Opp	127				Furnished
489XHAHX-*5 (15)	250	Opp	114				Furnished	442XQAHX-*4 (1)	225	Opp	137				Furnished
489XLAHX-*5 (1)	250	Opp	127				Furnished	442XRAHX-*4 (1)	225	Opp	159				Furnished
489XQAHX-*5 (1)	225	Opp	137				Furnished	442XSAHX-*4 (1)	200	Opp	189				Furnished
489XRAHX-*5 (1)	225	Opp	159				Furnished	442XUAHX-*4 (1)	195	Opp	225				Furnished
489XSAHX-*5 (1)	200	Opp	189				Furnished	442XWAHX-*4 (1)	175	Opp	265				Furnished
489XUAHX-*5 (1)	195	Opp	225				Furnished	442XXAHX-*4 (1)	140	Opp	313				Furnished
489XWAHX-*5 (1)	175	Opp	265				Furnished	660XFAHX-*4 (10)	375	Opp	98				Furnished
489XXAHX-*5 (1)	140	Opp	313				Furnished	660XHAHX-*4 (15)	375	Opp	114				Furnished
680XFAHX-*5 (10)	375	Opp	98				Furnished	660XQAHX-*4 (11)	375	Opp	137				Furnished
680XHAHX-*5 (20)	375	Opp	114				Furnished	660XRAHX-*4 (18)	350	Opp	159				Furnished
680XQAHX-*5 (11)	375	Opp	137				Furnished	660XSAHX-*4 (14)	325	Opp	189				Furnished
680XRAHX-*5 (18)	350	Opp	159				Furnished								
680XSAHX-*5 (14)	325	Opp	189				Furnished								
823XBAHX-*5 (22)	500	Opp	67				Furnished								
823XDAHX-*5 (26)	500	Opp	79				Furnished								
823XGAHX-*5 (27)	500	Opp	86				Furnished								
823XJAHX-*5 (23)	500	Opp	101				Furnished								
823XMAHX-*5 (21)	500	Opp	119				Furnished								
823XRAHX-*5 (25)	400	Opp	164				Furnished								
823XTKTX-*5 (17)	350	Opp	199		8-A-165(28)		Furnished								
880XBAHX-*5 (3)	500	Opp	67				Furnished								
880XDAHX-*5 (4)	500	Opp	79				Furnished								
880XGAHX-*5 (9)	500	Opp	86				Furnished								
880XJAHX-*5 (5)	500	Opp	101				Furnished								

Continued Next Page

CAUTION: Do not use geared adapters with 442 "A" and "C" ratios.

CAUTION: 660/680 Series: Applications above 1500 RPM output shaft speed, contact Chelsea Technical Service for approval. DO NOT use Standard Geared Adapters w/660 Series, contact Chelsea Technical Service.

NOTE: The AK & XK output flanges can not be used with the "A" & "C" ratios on the 489 Series PTOs due to mounting stud interference. Use a RA or RB rotatable flange for the XK and the RA for the AK flange.

NOTE: 282 Series stated torque values on this page are for Intermittent and Continuous Duty Applications.

(1) Input Gear Part No. 5-P-1004
(2) Input Gear Part No. 5-P-1077
(3) Input Gear Part No. 5-P-1100
(4) Input Gear Part No. 5-P-1101
(5) Input Gear Part No. 5-P-1102
(9) Input Gear Part No. 5-P-1135
(10) Input Gear Part No. 5-P-1242
(11) Input Gear Part No. 5-P-1246
(12) Input Gear Part No. 5-P-1280
(13) Input Gear Part No. 5-P-1287
(14) Input Gear Part No. 5-P-1322
(15) Input Gear Part No. 5-P-1364
(17) Input Gear Part No. 5-P-1395
(18) Input Gear Part No. 5-P-1441
(20) Input Gear Part No. 5-P-1494
(21) Input Gear Part No. 5-P-283
(22) Input Gear Part No. 5-P-285
(23) Input Gear Part No. 5-P-325
(25) Input Gear Part No. 5-P-721
(26) Input Gear Part No. 5-P-971
(27) Input Gear Part No. 5-P-980
(28) Filler block furnished with P.T.O.
(29) Filler block furnished with P.T.O. but not required

Parker Hannifin Corporation
Chelsea Products Division
Olive Branch, MS 38654 USA

ASO10-ESP	LASO125-10S (BM#301620)	LLPSO125-10S
ASO10-VP10	LASO140-10S (BM#301621)	LLPSO140-10S
ASO100-10S	LASO150-10S (BM#301622)	LLPSO150-10S
ASO125-10S (BM#301579)	LLASO125-10S	LLPSO165-10S
ASO140-10S (BM#301580)	LLASO140-10S	LPSO100-10S
ASO150-10S (BM#301578)	LLASO150-10S	LPSO125-10S (BM#301572)
ASO160-10S	LLPSO10-VPD	LPSO140-10S (BM#301573)
ASO165-10S (BM#301581)	LLPSO100-10S	LPSO150-10S (BM#301574)

LEFT SIDE ONLY

TRANSMISSION GEAR DATA:
L.S. 08-BOLT Opening Gear FORWARD of Centerline
45 Teeth - SPUR

PITCH LINE TO APERTURE FACE:
0.7300" (18.5420MM)

RIGHT SIDE ONLY

TRANSMISSION GEAR DATA:
R.S. 06-BOLT Opening Gear REAR of Centerline
45 Teeth - SPUR

PITCH LINE TO APERTURE FACE:
1.0750" (27.3050MM)

Caution: Application Approval Required for PTO Output Shaft Speeds Above 2500 RPM

LEFT Side PTO Model	Inter. Torq.	Dir. Rot.	Engine % Fwd.	Engine % Rev.	Filler Block	Adapter Assy.	Stud Kit	RIGHT Side PTO Model	Inter. Torq.	Dir. Rot.	Engine % Fwd.	Engine % Rev.	Filler Block	Adapter Assy.	Stud Kit
ONE SPEED - TWO GEAR - MECHANICAL SHIFT															
880XMAHX-*5 (6)	500	Opp	119				Furnished								
880XQAHX-*5 (16)	450	Opp	139				Furnished								
880XRAHX-*5 (7)	400	Opp	164				Furnished								
880XTAHX-*5 (8)	350	Opp	212				Furnished								
ONE SPEED - TWO GEAR POWERSHIFT (AIR OR HYDRAULIC)															
282XBAJX-*5	300	Opp	67		7-A-093		Furnished								
282XCAJX-*5	300	Opp	81		7-A-093		Furnished								
282XDAJX-*5	300	Opp	97		7-A-093		Furnished								
282XGAJX-*5	300	Opp	115		7-A-093		Furnished								
282XKAJX-*5	300	Opp	129		7-A-093		Furnished								
282XMAJX-*5	300	Opp	144		7-A-093		Furnished								
282XPAJX-*5	300	Opp	161		7-A-093		Furnished								
282XSAJX-*5	278	Opp	180		7-A-093		Furnished								
282XTAJX-*5	248	Opp	202		7-A-093		Furnished								
ONE SPEED - TWO GEAR - POWERSHIFT (AIR)															
230XAAJX-*5	250	Opp	52		7-A-093	328481X	Furnished	230XAAJX-*4	250	Opp	52		7-A-093		Furnished
230XBAJX-*5	250	Opp	67		7-A-093	328481X	Furnished	230XBAJX-*4	250	Opp	67		7-A-093		Furnished
230XDAJX-*5	250	Opp	78		7-A-093	328481X	Furnished	230XDAJX-*4	250	Opp	78		7-A-093		Furnished
230XKAJX-*5	250	Opp	105		7-A-093	328481X	Furnished	230XKAJX-*4	250	Opp	105		7-A-093		Furnished
230XQAJX-*5	250	Opp	140		7-A-093	328481X	Furnished	230XQAJX-*4	250	Opp	140		7-A-093		Furnished
230XUAJX-*5	225	Opp	224		7-A-093	328481X	Furnished	230XUAJX-*4	225	Opp	224		7-A-093		Furnished
236XAAHX-*5 (19)	250	Opp	68			328481X	Furnished	236XAAHX-*4 (19)	250	Opp	67				Furnished
238XAAHX-*5 (19)	250	Opp	68				Furnished	236XDAHX-*4 (1)	250	Opp	103				Furnished
238XDAHX-*5 (1)	250	Opp	103				Furnished	236XKAHX-*4 (1)	250	Opp	132				Furnished
238XKAHX-*5 (1)	250	Opp	132				Furnished	236XQAHX-*4 (1)	250	Opp	178				Furnished
238XQAHX-*5 (1)	250	Opp	178				Furnished	236XUAHX-*4 (1)	225	Opp	204				Furnished
238XUAHX-*5 (1)	225	Opp	204				Furnished								
885XBAHX-*5 (3)	500	Opp	67				Furnished								
885XGAHX-*5 (9)	500	Opp	86				Furnished								

Continued Next Page

CAUTION: Do not use geared adapters with 442 "A" and "C" ratios.

CAUTION: 660/680 Series: Applications above 1500 RPM output shaft speed, contact Chelsea Technical Service for approval. DO NOT use Standard Geared Adapters w/660 Series, contact Chelsea Technical Service.

NOTE: The AK & XK output flanges can not be used with the "A" & "C" ratios on the 489 Series PTOs due to mounting stud interference. Use a RA or RB rotatable flange for the XK and the RA for the AK flange.

NOTE: 282 Series stated torque values on this page are for Intermittent and Continuous Duty Applications.

(1) Input Gear Part No. 5-P-1004
(3) Input Gear Part No. 5-P-1100
(6) Input Gear Part No. 5-P-1103
(7) Input Gear Part No. 5-P-1104
(8) Input Gear Part No. 5-P-1105
(9) Input Gear Part No. 5-P-1135
(16) Input Gear Part No. 5-P-1385
(19) Input Gear Part No. 5-P-1486

Parker Hannifin Corporation
Chelsea Products Division
Olive Branch, MS 38654 USA

ASO10-ESP	LASO125-10S (BM#301620)	LLPSO125-10S
ASO10-VP10	LASO140-10S (BM#301621)	LLPSO140-10S
ASO100-10S	LASO150-10S (BM#301622)	LLPSO150-10S
ASO125-10S (BM#301579)	LLASO125-10S	LLPSO165-10S
ASO140-10S (BM#301580)	LLASO140-10S	LPSO100-10S
ASO150-10S (BM#301578)	LLASO150-10S	LPSO125-10S (BM#301572)
ASO160-10S	LLPSO10-VPD	LPSO140-10S (BM#301573)
ASO165-10S (BM#301581)	LLPSO100-10S	LPSO150-10S (BM#301574)

LEFT SIDE ONLY

TRANSMISSION GEAR DATA:
L.S. 08-BOLT Opening Gear FORWARD of Centerline
45 Teeth - SPUR

PITCH LINE TO APERTURE FACE:
0.7300" (18.5420MM)

RIGHT SIDE ONLY

TRANSMISSION GEAR DATA:
R.S. 06-BOLT Opening Gear REAR of Centerline
45 Teeth - SPUR

PITCH LINE TO APERTURE FACE:
1.0750" (27.3050MM)

Caution: Application Approval Required for PTO Output Shaft Speeds Above 2500 RPM

LEFT Side PTO Model	Inter. Torq.	Dir. Rot.	Engine % Fwd.	Engine % Rev.	Filler Block	Adapter Assy.	Stud Kit	RIGHT Side PTO Model	Inter. Torq.	Dir. Rot.	Engine % Fwd.	Engine % Rev.	Filler Block	Adapter Assy.	Stud Kit
ONE SPEED - TWO GEAR - POWERSHIFT (AIR)															
885XJAHX-*5 (5)	500	Opp	101				Furnished								
885XMAHX-*5 (6)	500	Opp	119				Furnished								
ONE SPEED - FORWARD & REVERSE															
340XFAHX-*5 (24)	200	Opp	86	90	7-A-140(28)	328481X	Furnished	340XFAHX-*4 (24)	200	Opp	86	90	7-A-140(28)		Furnished
348ZFAHX-*5 (24)	200	Opp	86	90	8-A-093(T) 8-A-032(P)		Furnished	352XSAHX-*4 (1)	140	Opp	191	248			Furnished
352XSAHX-*5 (1)	140	Opp	191	248		328481X	Furnished								
863XBAHX-*5	500	Opp	67	83			Furnished								
GEARED ADAPTERS															
628XAHX-4AH	250	Eng	0		8-A-032		Furnished	626XAHX-4AH	250	Eng	0				Furnished
								630XAHX-4AH	250	Eng	0				Furnished
								645XAHX-4AH	250	Eng	0				Furnished

CAUTION: Do not use geared adapters with 442 "A" and "C" ratios.

CAUTION: 660/680 Series: Applications above 1500 RPM output shaft speed, contact Chelsea Technical Service for approval. DO NOT use Standard Geared Adapters w/660 Series, contact Chelsea Technical Service.

NOTE: The AK & XK output flanges can not be used with the "A" & "C" ratios on the 489 Series PTOs due to mounting stud interference. Use a RA or RB rotatable flange for the XK and the RA for the AK flange.

NOTE: 282 Series stated torque values on this page are for Intermittent and Continuous Duty Applications.

(1) Input Gear Part No. 5-P-1004
(5) Input Gear Part No. 5-P-1102
(6) Input Gear Part No. 5-P-1103
(24) Input Gear Part No. 5-P-581
(28) Filler block furnished with P.T.O.

Parker Hannifin Corporation
Chelsea Products Division
Olive Branch, MS 38654 USA

PS86-10V (BM#301587)

LEFT SIDE ONLY

TRANSMISSION GEAR DATA:
L.S. 08-BOLT Opening Gear FORWARD of Centerline
45 Teeth - SPUR

PITCH LINE TO APERTURE FACE:
0.7300" (17.8550MM)

RIGHT SIDE ONLY

TRANSMISSION GEAR DATA:
R.S. 06-BOLT Opening Gear REAR of Centerline
45 Teeth - SPUR

PITCH LINE TO APERTURE FACE:
1.0750" (27.3050MM)

Caution: Application Approval Required for PTO Output Shaft Speeds Above 2500 RPM

LEFT Side PTO Model	Inter. Torq.	Dir. Rot.	Engine % Fwd.	Engine % Rev.	Filler Block	Adapter Assy.	Stud Kit	RIGHT Side PTO Model	Inter. Torq.	Dir. Rot.	Engine % Fwd.	Engine % Rev.	Filler Block	Adapter Assy.	Stud Kit
ONE SPEED - TWO GEAR - MECHANICAL SHIFT															
221XEAHX-*5	250	Opp	58			328481X	Furnished	221XCAHX-*4	250	Opp	51		7-A-062 7-A-032(23)		Furnished
489XAAHX-*5 (12)	250	Opp	44				Furnished	221XEAHX-*4	250	Opp	58				Furnished
489XCAHX-*5 (13)	250	Opp	57				Furnished	221XLAHX-*4	200	Opp	78				Furnished
489XFAHX-*5 (2)	250	Opp	70				Furnished	221XPAHX-*4	200	Opp	95				Furnished
489XHAHX-*5 (15)	250	Opp	81				Furnished	442XFAHX-*4 (2)	250	Opp	70				Furnished
489XLAHX-*5 (1)	250	Opp	91				Furnished	442XHAHX-*4 (15)	250	Opp	81				Furnished
489XQAHX-*5 (1)	225	Opp	98				Furnished	442XLAHX-*4 (1)	250	Opp	91				Furnished
489XRAHX-*5 (1)	225	Opp	113				Furnished	442XQAHX-*4 (1)	225	Opp	98				Furnished
489XSAHX-*5 (1)	200	Opp	135				Furnished	442XRAHX-*4 (1)	225	Opp	113				Furnished
489XUAHX-*5 (1)	195	Opp	161				Furnished	442XSAHX-*4 (1)	200	Opp	135				Furnished
489XWAHX-*5 (1)	175	Opp	189				Furnished	442XUAHX-*4 (1)	195	Opp	161				Furnished
489XXAHX-*5 (1)	140	Opp	224				Furnished	442XWAHX-*4 (1)	175	Opp	189				Furnished
680XFAHX-*5 (10)	375	Opp	70				Furnished	442XXAHX-*4 (1)	140	Opp	224				Furnished
680XHAHX-*5 (20)	375	Opp	81				Furnished	660XFAHX-*4 (10)	375	Opp	70				Furnished
680XQAHX-*5 (11)	375	Opp	98				Furnished	660XHAHX-*4 (15)	375	Opp	81				Furnished
680XRAHX-*5 (18)	350	Opp	113				Furnished	660XQAHX-*4 (11)	375	Opp	98				Furnished
680XSAHX-*5 (14)	325	Opp	135				Furnished	660XRAHX-*4 (18)	350	Opp	113				Furnished
823XTKTX-*3 (17)	350	Opp	142		8-A-165(22)		Furnished	660XSAHX-*4 (14)	325	Opp	135				Furnished
880XBAHX-*3 (3)	500	Opp	48				Furnished								
880XDAHX-*3 (4)	500	Opp	57				Furnished								
880XGAHX-*3 (9)	500	Opp	62				Furnished								
880XJAHX-*3 (5)	500	Opp	72				Furnished								
880XMAHX-*3 (6)	500	Opp	85				Furnished								
880XQAHX-*3 (16)	450	Opp	99				Furnished								
880XRAHX-*3 (7)	400	Opp	117				Furnished								
880XTAHX-*3 (8)	350	Opp	151				Furnished								
ONE SPEED - TWO GEAR POWERSHIFT (AIR OR HYDRAULIC)															
282XBAJX-*5	300	Opp	48				Furnished								
282XCAJX-*5	300	Opp	58				Furnished								
282XDAJX-*5	300	Opp	69				Furnished								

Continued Next Page

CAUTION: 660/680 Series: Applications above 1500 RPM output shaft speed, contact Chelsea Technical Service for approval. DO NOT use Standard Geared Adapters w/660 Series, contact Chelsea Technical Service.

NOTE: The AK & XK output flanges can not be used with the "A" & "C" ratios on the 489 Series PTOs due to mounting stud interference. Use a RA or RB rotatable flange for the XK and the RA for the AK flange.

NOTE: 282 Series stated torque values on this page are for Intermittent and Continuous Duty Applications.

(1) Input Gear Part No. 5-P-1004
(2) Input Gear Part No. 5-P-1077
(3) Input Gear Part No. 5-P-1100
(4) Input Gear Part No. 5-P-1101
(5) Input Gear Part No. 5-P-1102
(6) Input Gear Part No. 5-P-1103
(7) Input Gear Part No. 5-P-1104
(8) Input Gear Part No. 5-P-1105
(9) Input Gear Part No. 5-P-1135
(10) Input Gear Part No. 5-P-1242
(11) Input Gear Part No. 5-P-1246
(12) Input Gear Part No. 5-P-1280
(13) Input Gear Part No. 5-P-1287
(14) Input Gear Part No. 5-P-1322
(15) Input Gear Part No. 5-P-1364
(16) Input Gear Part No. 5-P-1385
(17) Input Gear Part No. 5-P-1395
(18) Input Gear Part No. 5-P-1441
(20) Input Gear Part No. 5-P-1494
(22) Filler block furnished with P.T.O.
(23) Filler block furnished with P.T.O. but not required

Parker Hannifin Corporation
Chelsea Products Division
Olive Branch, MS 38654 USA

PS86-10V (BM#301587)

LEFT SIDE ONLY

TRANSMISSION GEAR DATA:
L.S. 08-BOLT Opening Gear FORWARD of Centerline
45 Teeth - SPUR

PITCH LINE TO APERTURE FACE:
0.7300" (17.8550MM)

RIGHT SIDE ONLY

TRANSMISSION GEAR DATA:
R.S. 06-BOLT Opening Gear REAR of Centerline
45 Teeth - SPUR

PITCH LINE TO APERTURE FACE:
1.0750" (27.3050MM)

Caution: Application Approval Required for PTO Output Shaft Speeds Above 2500 RPM

LEFT Side PTO Model	Inter. Torq.	Dir. Rot.	Engine % Fwd.	Engine % Rev.	Filler Block	Adapter Assy.	Stud Kit	RIGHT Side PTO Model	Inter. Torq.	Dir. Rot.	Engine % Fwd.	Engine % Rev.	Filler Block	Adapter Assy.	Stud Kit
ONE SPEED - TWO GEAR POWERSHIFT (AIR OR HYDRAULIC)															
282XGAJX-*5	300	Opp	82				Furnished								
282XKAJX-*5	300	Opp	92				Furnished								
282XMAJX-*5	300	Opp	103				Furnished								
282XPAJX-*5	300	Opp	115				Furnished								
282XSAJX-*5	300	Opp	129				Furnished								
282XTAJX-*5	300	Opp	144				Furnished								
ONE SPEED - TWO GEAR - POWERSHIFT (AIR)															
230XKAJX-*5	250	Opp	75			328481X	Furnished	230XKAJX-*4	250	Opp	75		7-A-093		Furnished
230XQAJX-*5	250	Opp	100			328481X	Furnished	230XQAJX-*4	250	Opp	100		7-A-093		Furnished
230XUAJX-*5	225	Opp	160			328481X	Furnished	230XUAJX-*4	225	Opp	160		7-A-093		Furnished
238XAAHX-*5 (19)	250	Opp	49				Furnished	236XAAHX-*4 (19)	250	Opp	49				Furnished
238XDAHX-*5 (1)	250	Opp	74				Furnished	236XDAHX-*4 (1)	250	Opp	74				Furnished
238XKAHX-*5 (1)	250	Opp	94				Furnished	236XKAHX-*4 (1)	250	Opp	94				Furnished
238XQAHX-*5 (1)	250	Opp	127				Furnished	236XQAHX-*4 (1)	250	Opp	127				Furnished
238XUAHX-*5 (1)	225	Opp	146				Furnished	236XUAHX-*4 (1)	225	Opp	146				Furnished
885XBAHX-*3 (3)	500	Opp	48				Furnished								
885XGAHX-*3 (9)	500	Opp	62				Furnished								
885XJAHX-*3 (5)	500	Opp	72				Furnished								
885XMAHX-*3 (6)	500	Opp	85				Furnished								
ONE SPEED - FORWARD & REVERSE															
340XFAHX-*4 (21)	200	Opp	61	64	7-A-140(23)		Furnished	340XFAHX-*4 (21)	200	Opp	61	64	7-A-140(23)		Furnished
352XSAHX-*4 (1)	140	Opp	137	177			Furnished	352XSAHX-*4 (1)	140	Opp	137	177			Furnished
863XBAHX-*5	500	Opp	48	59			Furnished								

CAUTION: 660/680 Series: Applications above 1500 RPM output shaft speed, contact Chelsea Technical Service for approval. DO NOT use Standard Geared Adapters w/660 Series, contact Chelsea Technical Service.

NOTE: The AK & XK output flanges can not be used with the "A" & "C" ratios on the 489 Series PTOs due to mounting stud interference. Use a RA or RB rotatable flange for the XK and the RA for the AK flange.

NOTE: 282 Series stated torque values on this page are for Intermittent and Continuous Duty Applications.

(1) Input Gear Part No. 5-P-1004
(3) Input Gear Part No. 5-P-1100
(5) Input Gear Part No. 5-P-1102
(6) Input Gear Part No. 5-P-1103
(9) Input Gear Part No. 5-P-1135
(19) Input Gear Part No. 5-P-1486
(21) Input Gear Part No. 5-P-581
(23) Filler block furnished with P.T.O. but not required

Parker Hannifin Corporation
Chelsea Products Division
Olive Branch, MS 38654 USA

TDET0880 (Same as TR-4050, Dodge Mexico)
TDET1015 (Same as TR4050 w/ special ratio-Ford Mexico)
TDET1361 (Same as TR-4050, Chev/GMC)
TDET1664 (Same as TR-4050, Ford Mexico)
TR-4050 (Transmission made in Mexico)

RIGHT SIDE ONLY

TRANSMISSION GEAR DATA:
R.S. 06-BOLT Opening Gear FORWARD of Centerline
32 Teeth - R.H. HELIX

PITCH LINE TO APERTURE FACE:
1.1400" (28.9342MM)

Caution: Application Approval Required for PTO Output Shaft Speeds Above 2500 RPM

	Inter. Torq.	Dir. Rot.	Engine % Fwd.	Engine % Rev.	Filler Block	Adapter Assy.	Stud Kit	RIGHT Side PTO Model	Inter. Torq.	Dir. Rot.	Engine % Fwd.	Engine % Rev.	Filler Block	Adapter Assy.	Stud Kit
ONE SPEED - TWO GEAR - MECHANICAL SHIFT															
								442XLKNX-*3 (1)	250	Opp	49				Furnished
								442XQKNX-*3 (1)	225	Opp	53				Furnished
								442XRKNX-*3 (1)	225	Opp	61				Furnished
								442XSKNX-*3 (1)	200	Opp	73				Furnished
								442XUKNX-*3 (1)	195	Opp	87				Furnished
								442XWKNX-*3 (1)	175	Opp	102				Furnished
								442XXKNX-*3 (1)	140	Opp	121				Furnished
GEARED ADAPTERS															
								626XKNX-3KP	250	Eng	0				7170-4X
								630XKNX-3KP	250	Eng	0				7170-4X
								645XKNX-3KP	250	Eng	0				7170-4X

(1) Input Gear Part No. 5-P-1383

Parker Hannifin Corporation
Chelsea Products Division
Olive Branch, MS 38654 USA

PSDO165-18A (Released for Mexico Market)
PSDO185-18A (Released for Mexico Market)
PSDO205-18A (Released for Mexico Market)

BOTTOM SIDE ONLY

TRANSMISSION GEAR DATA:
BOT 08-BOLT Opening Gear FORWARD of Centerline
52 Teeth - SPUR

PITCH LINE TO APERTURE FACE:
0.9280" (23.5700MM)

RIGHT SIDE ONLY

TRANSMISSION GEAR DATA:
R.S. 06-BOLT Opening Gear REAR of Centerline
52 Teeth - SPUR

PITCH LINE TO APERTURE FACE:
1.2280" (31.1900MM)

Caution: Application Approval Required for PTO Output Shaft Speeds Above 2500 RPM

ONE SPEED - TWO GEAR - MECHANICAL SHIFT

BOTTOM Side PTO Model	Inter. Torq.	Dir. Rot.	Engine % Fwd.	Engine % Rev.	Filler Block	Adapter Assy.	Stud Kit	RIGHT Side PTO Model	Inter. Torq.	Dir. Rot.	Engine % Fwd.	Engine % Rev.	Filler Block	Adapter Assy.	Stud Kit
221ZCAHX-*3 (20)	250	Opp	68		8-A-032(T)	310778X	Furnished	221ZCAHX-*4 (20)	250	Opp	68		7-A-093(T)		328170-96X
221ZEAHX-*3 (19)	250	Opp	75			310778X	Furnished	221ZEAHX-*4 (19)	250	Opp	75		7-A-062(T)		328170-96X
221ZLAHX-*3 (19)	200	Opp	101			310778X	Furnished	221ZLAHX-*4 (19)	200	Opp	101		7-A-062(T)		328170-96X
221ZPAHX-*3 (19)	200	Opp	122			310778X	Furnished	221ZPAHX-*4 (19)	200	Opp	122		7-A-062(T)		328170-96X
489ZAAHX-*5 (12)	250	Opp	59		8-A-032(P)		Furnished	442LAAHX-*4 (12)	250	Opp	59		7-A-062(P)		328170-94X
489ZCAHX-*5 (13)	250	Opp	76		8-A-032(P)		Furnished	442LCAHX-*4 (13)	250	Opp	76		7-A-062(P)		328170-94X
489ZFAHX-*5 (2)	250	Opp	94		8-A-032(P)		Furnished	442LFAHX-*4 (2)	250	Opp	94		7-A-062(P)		328170-94X
489ZHAHX-*5 (15)	250	Opp	108		8-A-032(P)		Furnished	442LHAHX-*4 (15)	250	Opp	108		7-A-062(P)		328170-94X
489ZLAHX-*5 (1)	250	Opp	122		8-A-032(P)		Furnished	442LLAHX-*4 (1)	250	Opp	121		7-A-062(P)		328170-94X
489ZQAHX-*5 (1)	225	Opp	131		8-A-032(P)		Furnished	442LQAHX-*4 (1)	225	Opp	131		7-A-062(P)		328170-94X
489ZRAHX-*5 (1)	225	Opp	152		8-A-032(P)		Furnished	442LRAHX-*4 (1)	225	Opp	152		7-A-062(P)		328170-94X
489ZSAHX-*5 (1)	200	Opp	181		8-A-032(P)		Furnished	442LSAHX-*4 (1)	200	Opp	181		7-A-062(P)		328170-94X
489ZUAHX-*5 (1)	195	Opp	215		8-A-032(P)		Furnished	442LUAHX-*4 (1)	195	Opp	216		7-A-062(P)		328170-94X
489ZWAHX-*5 (1)	175	Opp	254		8-A-032(P)		Furnished	442LWAHX-*4 (1)	175	Opp	254		7-A-062(P)		328170-94X
489ZXAHX-*5 (1)	140	Opp	300		8-A-032(P)		Furnished	442LXAHX-*4 (1)	140	Opp	301		7-A-062(P)		328170-94X
880ZBAHX-*3 (3)	500	Opp	64		8-A-248(P) 8-A-500		328170-179X	660LFAHX-*4 (10)	375	Opp	94		7-A-062(P)		328170-94X
880ZDAHX-*3 (4)	500	Opp	76		8-A-245(P) 8-A-500		328170-179X	660LHAHX-*4 (15)	375	Opp	108		7-A-062(P)		328170-94X
880ZGAHX-*3 (9)	500	Opp	85		8-A-248(P) 8-A-500		328170-179X	660LQAHX-*4 (11)	375	Opp	131		7-A-062(P)		328170-94X
880ZJAHX-*3 (5)	500	Opp	97		8-A-248(P) 8-A-500		328170-179X	660LRAHX-*4 (17)	350	Opp	152		7-A-062(P)		328170-94X
880ZMAHX-*3 (6)	500	Opp	113		8-A-248(P) 8-A-500		328170-179X	660LSAHX-*4 (14)	325	Opp	181		7-A-062(P)		328170-94X
880ZQAHX-*3 (16)	450	Opp	134		8-A-248(P) 8-A-500		328170-179X								
880ZRAHX-*3 (7)	400	Opp	158		8-A-248(P) 8-A-500		328170-179X								
880ZTAHX-*3 (8)	350	Opp	203		8-A-248(P) 8-A-500		328170-179X								

Continued Next Page

CAUTION: 660/680 Series: Applications above 1500 RPM output shaft speed, contact Chelsea Technical Service for approval. DO NOT use Standard Geared Adapters w/660 Series, contact Chelsea Technical Service.

NOTE: The PTO output speeds shown are with the transmission in High Range, for PTO output speeds with the transmission in low range, multiply speeds shown by .82

NOTE: 282 Series stated torque values on this page are for Intermittent and Continuous Duty Applications.

(1) Input Gear Part No. 5-P-1004
(2) Input Gear Part No. 5-P-1077
(3) Input Gear Part No. 5-P-1100
(4) Input Gear Part No. 5-P-1101
(5) Input Gear Part No. 5-P-1102
(6) Input Gear Part No. 5-P-1103
(7) Input Gear Part No. 5-P-1104
(8) Input Gear Part No. 5-P-1105
(9) Input Gear Part No. 5-P-1135
(10) Input Gear Part No. 5-P-1242
(11) Input Gear Part No. 5-P-1246
(12) Input Gear Part No. 5-P-1280
(13) Input Gear Part No. 5-P-1287
(14) Input Gear Part No. 5-P-1322
(15) Input Gear Part No. 5-P-1364
(16) Input Gear Part No. 5-P-1385
(17) Input Gear Part No. 5-P-1441
(19) Input Gear Part No. 5-P-202
(20) Input Gear Part No. 5-P-319

Parker Hannifin Corporation
Chelsea Products Division
Olive Branch, MS 38654 USA

PSDO165-18A (Released for Mexico Market)
PSDO185-18A (Released for Mexico Market)
PSDO205-18A (Released for Mexico Market)

BOTTOM SIDE ONLY

TRANSMISSION GEAR DATA:
BOT 08-BOLT Opening Gear FORWARD of Centerline
52 Teeth - SPUR

PITCH LINE TO APERTURE FACE:
0.9280" (23.5700MM)

RIGHT SIDE ONLY

TRANSMISSION GEAR DATA:
R.S. 06-BOLT Opening Gear REAR of Centerline
52 Teeth - SPUR

PITCH LINE TO APERTURE FACE:
1.2280" (31.1900MM)

Caution: Application Approval Required for PTO Output Shaft Speeds Above 2500 RPM

BOTTOM Side PTO Model	Inter. Torq.	Dir. Rot.	Engine % Fwd.	Engine % Rev.	Filler Block	Adapter Assy.	Stud Kit	RIGHT Side PTO Model	Inter. Torq.	Dir. Rot.	Engine % Fwd.	Engine % Rev.	Filler Block	Adapter Assy.	Stud Kit
ONE SPEED - TWO GEAR POWERSHIFT (AIR OR HYDRAULIC)															
282XBAJX-*5	300	Opp	64		8-A-032		Furnished								
282XCAJX-*5	300	Opp	78		8-A-032		Furnished								
282XDAJX-*5	300	Opp	93		8-A-032		Furnished								
282XGAJX-*5	300	Opp	111		8-A-032		Furnished								
282XKAJX-*5	300	Opp	124		8-A-032		Furnished								
282XMAJX-*5	300	Opp	139		8-A-032		Furnished								
282XPAJX-*5	300	Opp	155		8-A-032		Furnished								
282XSAJX-*5	289	Opp	173		8-A-032		Furnished								
282XTAJX-*5	258	Opp	194		8-A-032		Furnished								
ONE SPEED - TWO GEAR - POWERSHIFT (AIR)															
236ZAAHX-*3 (18)	250	Opp	65		7-A-093(P)	328481X	328170-94X	236LAAHX-*4 (18)	250	Opp	65		7-A-062(T)		328170-94X
238ZAAHX-*3 (18)	250	Opp	65		8-A-032(P)		Furnished	236LDAHX-*4 (1)	250	Opp	98		7-A-062(T)		328170-94X
238ZDAHX-*3 (1)	250	Opp	98		8-A-032(P)		Furnished	236LKAHX-*4 (1)	250	Opp	127		7-A-062(T)		328170-94X
238ZKAHX-*3 (1)	250	Opp	127		8-A-032(P)		Furnished	236LQAHX-*4 (1)	250	Opp	170		7-A-062(T)		328170-94X
238ZQAHX-*3 (1)	250	Opp	170		8-A-032(P)		Furnished	236LUAHX-*4 (1)	225	Opp	196		7-A-062(T)		328170-94X
238ZUAHX-*3 (1)	225	Opp	195		8-A-032(P)		Furnished								
ONE SPEED - FORWARD & REVERSE															
348ZFAHX-*5 (21)	200	Opp	82	86	8-A-032		Furnished	340ZFAHX-*4 (21)	200	Opp	82	86	7-A-062(P)		Furnished
352ZSAHX-*3 (1)	140	Opp	181	237	7-A-093(P)	328481X	328170-94X	352ZSAHX-*4 (1)	140	Opp	181	237	7-A-062(P)		328170-94X
GEARED ADAPTERS															
628ZAHX-3XX (1)	250	Eng	0		8-A-032(T)		Furnished	626KAHX-4XX (1)	250	Eng	0		7-A-062(T)		328170-94X
								630KAHX-4XX (1)	250	Eng	0		7-A-062(T)		328170-94X
								645KAHX-4XX (1)	250	Eng	0		7-A-062(T)		328170-94X

CAUTION: 660/680 Series: Applications above 1500 RPM output shaft speed, contact Chelsea Technical Service for approval. DO NOT use Standard Geared Adapters w/660 Series, contact Chelsea Technical Service.

NOTE: The PTO output speeds shown are with the transmission in High Range, for PTO output speeds with the transmission in low range, multiply speeds shown by .82

NOTE: 282 Series stated torque values on this page are for Intermittent and Continuous Duty Applications.

(1) Input Gear Part No. 5-P-1004
(18) Input Gear Part No. 5-P-1486
(21) Input Gear Part No. 5-P-581

Parker Hannifin Corporation
Chelsea Products Division
Olive Branch, MS 38654 USA



VOLVO

Parker Chelsea

ENGINEERING YOUR SUCCESS.

Volvo

⚠ WARNING — User Responsibility

FAILURE OR IMPROPER SELECTION OR IMPROPER USE OF THE PRODUCTS DESCRIBED HEREIN OR RELATED ITEMS CAN CAUSE DEATH, PERSONAL INJURY AND PROPERTY DAMAGE.

This document and other information from Parker-Hannifin Corporation, its subsidiaries and authorized distributors provide product or system options for further investigation by users having technical expertise.

The user, through its own analysis and testing, is solely responsible for making the final selection of the system and components and assuring that all performance, endurance, maintenance, safety and warning requirements of the application are met. The user must analyze all aspects of the application, follow applicable industry standards, and follow the information concerning the product in the current product catalog and in any other materials provided from Parker or its subsidiaries or authorized distributors.

To the extent that Parker or its subsidiaries or authorized distributors provide component or system options based upon data or specifications provided by the user, the user is responsible for determining that such data and specifications are suitable and sufficient for all applications and reasonably foreseeable uses of the components or systems.

Offer of Sale

The items described in this document are hereby offered for sale by Parker Hannifin Corporation, its subsidiaries or its authorized distributors. This offer and its acceptance are governed by the provisions stated in the "Offer of Sale".

© Copyright 2016, Parker Hannifin Corporation, All Rights Reserved

Parker Hannifin Corporation
Chelsea Products Division
Olive Branch, MS 38654 USA

Transmission Make and Model	PTO Appl. Number	Number Forward Speeds	Teeth in PTO Driver
AT2412 (I-Shift Transmission)	VLV-10	12	CS
AT2512 (I-Shift Transmission)	VLV-10	12	CS
AT2612 (I-Shift Transmission)	VLV-10	12	CS
AT2812 (I-Shift Transmission)	VLV-10	12	CS
ATO1109TO	VLV-15	9	CS
ATO2512 (I-Shift Transmission)	VLV-13	12	CS
ATO2612 (I-Shift Transmission)	VLV-13	12	CS
ATO3112 (I-Shift Transmission)	VLV-13	12	CS
V2412AT (I-Shift Transmission)	VLV-10	12	CS
V2512AT (I-Shift Transmission)	VLV-10	12	CS
V2812AT (I-Shift Transmission)	VLV-10	12	CS
VO2512AT (I-Shift Transmission)	VLV-13	12	CS
VO3112AT (I-Shift Transmission)	VLV-13	12	CS

IMPORTANT: See Safety Information in Section 1 of the Chelsea Applications catalog HY25-3000/US.

Transmission PTO Driver & Apertures (Viewed from Rear of Transmission)

L-Left Side R-Right Side B-Bottom Side T-Top Side CS-Countershaft

For transmissions not listed, contact your authorized Chelsea Distributor.

Parker Hannifin Corporation
Chelsea Products Division
Olive Branch, MS 38654 USA

V2412AT (I-Shift Transmission)
V2512AT (I-Shift Transmission)
V2812AT (I-Shift Transmission)
AT2412 (I-Shift Transmission)
AT2512 (I-Shift Transmission)
AT2612 (I-Shift Transmission)
AT2812 (I-Shift Transmission)

REAR SIDE ONLY

TRANSMISSION GEAR DATA:
REAR 04-BOLT Opening

PITCH LINE TO APERTURE FACE:

Caution: Application Approval Required for PTO Output Shaft Speeds Above 2500 RPM

REAR MOUNT - MECHANICAL SHIFT (12 SPEED TRANSMISSIONS)

REAR Side PTO Model	Inter. Torq.	Dir. Rot.	Engine %		Filler Block	Adapter Assy.	Stud Kit		Inter. Torq.	Dir. Rot.	Engine %		Filler Block	Adapter Assy.	Stud Kit
			Fwd.	Rev.							Fwd.	Rev.			
523XTASX-V-*	258	Eng	97			329735X	Furnished								
523XVASX-V-*	258	Eng	115			329735X	Furnished								

NOTE: All Stated Torque Ratings for the 523 are Good for Both Continuous and Intermittent Applications.

NOTE: Rear Mount PTO speeds are shown in Low - Multiply All Values by 1.28 for High Split

NOTE: Connection to Volvo system required for Volvo I-Shift or Mack M-Drive, the vehicle needs to be ordered with PTO prep package. Vehicle ECU must be programmed by dealer for PTO operation.

NOTE: PTO must be ordered with the "V" shift option and use the OE factory supplied in dash PTO switch.

NOTE: 523 Rear Mounts-The adapter noted is furnished with the PTO

Volvo

Parker Hannifin Corporation
Chelsea Products Division
Olive Branch, MS 38654 USA

ATO2612 (I-Shift Transmission)
ATO3112 (I-Shift Transmission)
VO2512AT (I-Shift Transmission)
VO3112AT (I-Shift Transmission)
ATO2512 (I-Shift Transmission)

REAR SIDE ONLY

TRANSMISSION GEAR DATA:
REAR 04-BOLT Opening

PITCH LINE TO APERTURE FACE:

Caution: Application Approval Required for PTO Output Shaft Speeds Above 2500 RPM

REAR MOUNT - MECHANICAL SHIFT (12 SPEED TRANSMISSIONS)

REAR Side PTO Model	Inter. Torq.	Dir. Rot.	Engine % Fwd.	Engine % Rev.	Filler Block	Adapter Assy.	Stud Kit		Inter. Torq.	Dir. Rot.	Engine % Fwd.	Engine % Rev.	Filler Block	Adapter Assy.	Stud Kit
523XTASX-V-*	258	Eng	124			329735X	Furnished								
523XVASX-V-*	258	Eng	148			329735X	Furnished								

NOTE: All Stated Torque Ratings for the 523 are Good for Both Continuous and Intermittent Applications.

NOTE: Connection to Volvo system required for Volvo I-Shift or Mack M-Drive, the vehicle needs to be ordered with PTO prep package. Vehicle ECU must be programmed by dealer for PTO operation.

NOTE: PTO must be ordered with the "V" shift option and use the OE factory supplied in dash PTO switch.

NOTE: 523 Rear Mounts-The adapter noted is furnished with the PTO

NOTE: Rear Mount PTO speeds are shown in Low - Multiply All Values by 1.28 for High Split

Parker Hannifin Corporation
Chelsea Products Division
Olive Branch, MS 38654 USA

ATO1109TO

REAR SIDE ONLY

TRANSMISSION GEAR DATA:
REAR 00-BOLT Opening

PITCH LINE TO APERTURE FACE:

Caution: Application Approval Required for PTO Output Shaft Speeds Above 2500 RPM

REAR Side PTO Model	Inter. Torq.	Dir. Rot.	Engine % Fwd.	Engine % Rev.	Filler Block	Adapter Assy.	Stud Kit		Inter. Torq.	Dir. Rot.	Engine % Fwd.	Engine % Rev.	Filler Block	Adapter Assy.	Stud Kit
REAR MOUNT - MECHANICAL SHIFT															
511XRAQW-*-*	590	Opp	97			329743X	Furnished								
523XTAQX-*-*	258	Eng	134			329743X	Furnished								
523XVAQX-*-*	258	Eng	159			329743X	Furnished								

NOTE: 511/523 Rear Mounts-The adapter noted is furnished with the PTO

Volvo

Parker Hannifin Corporation
Chelsea Products Division
Olive Branch, MS 38654 USA



Parker Chelsea

ENGINEERING YOUR SUCCESS.

⚠ WARNING — User Responsibility

FAILURE OR IMPROPER SELECTION OR IMPROPER USE OF THE PRODUCTS DESCRIBED HEREIN OR RELATED ITEMS CAN CAUSE DEATH, PERSONAL INJURY AND PROPERTY DAMAGE.

This document and other information from Parker-Hannifin Corporation, its subsidiaries and authorized distributors provide product or system options for further investigation by users having technical expertise.

The user, through its own analysis and testing, is solely responsible for making the final selection of the system and components and assuring that all performance, endurance, maintenance, safety and warning requirements of the application are met. The user must analyze all aspects of the application, follow applicable industry standards, and follow the information concerning the product in the current product catalog and in any other materials provided from Parker or its subsidiaries or authorized distributors.

To the extent that Parker or its subsidiaries or authorized distributors provide component or system options based upon data or specifications provided by the user, the user is responsible for determining that such data and specifications are suitable and sufficient for all applications and reasonably foreseeable uses of the components or systems.

Offer of Sale

The items described in this document are hereby offered for sale by Parker Hannifin Corporation, its subsidiaries or its authorized distributors. This offer and its acceptance are governed by the provisions stated in the "Offer of Sale".

© Copyright 2016, Parker Hannifin Corporation, All Rights Reserved

ZF

Parker Hannifin Corporation
Chelsea Products Division
Olive Branch, MS 38654 USA

Transmission Make and Model	PTO Appl. Number	Number Forward Speeds	Teeth in PTO Driver
6S-650 (Ford Only Prior to January 2007)	ZF-45	6	L39
6S-750 (Ford Only Prior to January 2007)	ZF-45	6	L39
9S-1110TO (9.48/0.75 Ratio)	ZF-7	9	CS
9S-1310TO (9.48/0.75 Ratio)	ZF-7	9	CS
S5-42 (7.5 Gas Wide Ratio)	ZF-4	5	L45-R45
S5-47 (Gas Wide Ratio 5.72/0.76)	ZF-4	5	L45-R45
S6-36 (6.93/0.80 Ratio)	ZF-2	6	CS
S6-650 (Ford Truck Models Prior to January 2007)	ZF-45	6	L39
S6-650 (GM 3600 Cab/Chassis)	ZF-47	6	L39-R39

IMPORTANT: See Safety Information in Section 1 of the Chelsea Applications catalog HY25-3000/US.

Transmission PTO Driver & Apertures (Viewed from Rear of Transmission)

L-Left Side R-Right Side B-Bottom Side T-Top Side CS-Countershaft

For transmissions not listed, contact your authorized Chelsea Distributor.

Parker Hannifin Corporation
Chelsea Products Division
Olive Branch, MS 38654 USA

S6-36 (6.93/0.80 Ratio)

REAR SIDE ONLY

TRANSMISSION GEAR DATA:
REAR 04-BOLT Opening

PITCH LINE TO APERTURE FACE:

Caution: Application Approval Required for PTO Output Shaft Speeds Above 2500 RPM

REAR Side PTO Model	Inter. Torq.	Dir. Rot.	Engine % Fwd.	Engine % Rev.	Filler Block	Adapter Assy.	Stud Kit		Inter. Torq.	Dir. Rot.	Engine % Fwd.	Engine % Rev.	Filler Block	Adapter Assy.	Stud Kit
REAR MOUNT & THRUSHAFT															
511XRAAW-*-*	590	Opp	51				Furnished								
523XTAAX-*-*	258	Eng	70				Furnished								
523XVAAX-*-*	258	Eng	84				Furnished								

Parker Hannifin Corporation
Chelsea Products Division
Olive Branch, MS 38654 USA

S5-42 (7.5 Gas Wide Ratio)
S5-47 (Gas Wide Ratio 5.72/0.76)

LEFT SIDE ONLY

TRANSMISSION GEAR DATA:
L.S. 06-BOLT Opening Gear FORWARD of Centerline
45 Teeth - R.H. HELIX

PITCH LINE TO APERTURE FACE:
1.1953" (30.3606MM)

RIGHT SIDE ONLY

TRANSMISSION GEAR DATA:
R.S. 06-BOLT Opening Gear FORWARD of Centerline
45 Teeth - R.H. HELIX

PITCH LINE TO APERTURE FACE:
1.1953" (30.3606MM)

Caution: Application Approval Required for PTO Output Shaft Speeds Above 2500 RPM

LEFT Side PTO Model	Inter. Torq.	Dir. Rot.	Engine % Fwd.	Engine % Rev.	Filler Block	Adapter Assy.	Stud Kit	RIGHT Side PTO Model	Inter. Torq.	Dir. Rot.	Engine % Fwd.	Engine % Rev.	Filler Block	Adapter Assy.	Stud Kit
ONE SPEED - TWO GEAR - MECHANICAL SHIFT															
442XFGSX-*5 (2)	250	Opp	53				Furnished	442XFGSX-*3 (2)	250	Opp	53				Furnished
442XLGSX-*5 (3)	250	Opp	68				Furnished	442XLGSX-*3 (3)	250	Opp	68				Furnished
442XQGSX-*5 (3)	225	Opp	74				Furnished	442XQGSX-*3 (3)	225	Opp	74				Furnished
442XRGSX-*5 (3)	225	Opp	85				Furnished	442XRGSX-*3 (3)	225	Opp	85				Furnished
442XSGSX-*5 (3)	200	Opp	102				Furnished	442XSGSX-*3 (3)	200	Opp	102				Furnished
442XUGSX-*5 (3)	195	Opp	121				Furnished	442XUGSX-*3 (3)	195	Opp	121				Furnished
442XWGSX-*5 (3)	175	Opp	142				Furnished	442XWGSX-*3 (3)	175	Opp	142				Furnished
442XXGSX-*5 (3)	140	Opp	168				Furnished	442XXGSX-*3 (3)	140	Opp	168				Furnished
ONE SPEED - FORWARD & REVERSE															
340XFEDX-*5 (4)	200	Opp	41	43	7-A-140 7-A-270		7170-4X	340XFEDX-*5 (4)	200	Opp	41	43	7-A-140 7-A-270		7170-4X
352XSEDX-*5 (1)	140	Opp	88	114	7-A-270		7170-4X	352XSEDX-*3 (1)	140	Opp	88	114	7-A-270		7170-4X

NOTE: No adapters available for this application.

NOTE: The 100 Series will not mount on the left side due to interference with the reverse idler bulge.

NOTE: Gas tank may prohibit the remote mounting of a hydraulic pump on the Left Hand side.

NOTE: If there is interference with the exhaust system at the right hand aperture, use assembly arrangement "5".

NOTE: Chelsea pump model P16-45 thru-85 can be direct mounted to PTOs. Larger pumps can not be direct mounted due to interference with the transmission.

(1) Input Gear Part No. 5-P-1056
(2) Input Gear Part No. 5-P-1151
(3) Input Gear Part No. 5-P-1152
(4) Input Gear Part No. 5-P-897

Parker Hannifin Corporation
Chelsea Products Division
Olive Branch, MS 38654 USA

9S-1110TO (9.48/0.75 Ratio)
9S-1310TO (9.48/0.75 Ratio)

REAR SIDE ONLY

TRANSMISSION GEAR DATA:
REAR 04-BOLT Opening

PITCH LINE TO APERTURE FACE:

Caution: Application Approval Required for PTO Output Shaft Speeds Above 2500 RPM

REAR Side PTO Model	Inter. Torq.	Dir. Rot.	Engine % Fwd.	Engine % Rev.	Filler Block	Adapter Assy.	Stud Kit		Inter. Torq.	Dir. Rot.	Engine % Fwd.	Engine % Rev.	Filler Block	Adapter Assy.	Stud Kit
REAR MOUNT & THRUSHAFT															
511XRAQW-*-*	590	Opp	97			329743X	Furnished								
523XTAQX-*-*	258	Eng	134			329743X	Furnished								
523XVAQX-*-*	258	Eng	159			329743X	Furnished								

NOTE: 511/523 Rear Mounts-The adapter noted is furnished with the PTO

Parker Hannifin Corporation
Chelsea Products Division
Olive Branch, MS 38654 USA

6S-650 (Ford Only Prior to January 2007)
6S-750 (Ford Only Prior to January 2007)

LEFT SIDE ONLY

TRANSMISSION GEAR DATA:
L.S. 06-BOLT Opening Gear FORWARD of Centerline
39 Teeth - R.H. HELIX

PITCH LINE TO APERTURE FACE:
0.9330" (23.6982MM)

Caution: Application Approval Required for PTO Output Shaft Speeds Above 2500 RPM

LEFT Side PTO Model	Inter. Torq.	Dir. Rot.	Engine % Fwd.	Engine % Rev.	Filler Block	Adapter Assy.	Stud Kit		Inter. Torq.	Dir. Rot.	Engine % Fwd.	Engine % Rev.	Filler Block	Adapter Assy.	Stud Kit
ONE SPEED - TWO GEAR - MECHANICAL SHIFT															
442XLHYX-*5 (1)	250	Opp	65				Furnished								
442XQHYX-*5 (1)	225	Opp	70				Furnished								
442XRHYX-*5 (1)	225	Opp	81				Furnished								
442XSHYX-*5 (1)	200	Opp	96				Furnished								
442XUHYX-*5 (1)	195	Opp	115				Furnished								
442XWHYX-*5 (1)	175	Opp	135				Furnished								
442XXHYX-*5 (1)	140	Opp	160				Furnished								
ONE SPEED - TWO GEAR - POWERSHIFT (AIR)															
236XDHYX-*5 (1)	250	Opp	53				Furnished								
236XKHYX-*5 (1)	250	Opp	67				Furnished								
236XQHYX-*5 (1)	250	Opp	91				Furnished								
236XUHYX-*5 (1)	225	Opp	104				Furnished								
ONE SPEED - FORWARD & REVERSE															
340XFHYX-*5 (2)	200	Opp	46	48			Furnished								
352XSHYX-*5 (1)	140	Opp	98	126			Furnished								
GEARED ADAPTERS															
626XHYX-*4JB	250	Eng	0				Furnished								
630XHYX-*4JB	250	Eng	0				Furnished								
645XHYX-*4JB	250	Eng	0				Furnished								

NOTE: A "5" assembly is shown here, but other assembly arrangements may work better depending on the chassis setup, whether or not a direct mount pump is to be used, and whether or not a geared adapter is to be used. Chelsea P16-45 and -65 pumps can be direct mounted rearward if the PTO is a "3" assembly (bulge up), uses the XK pump flange, and is the L,R,S or U ratio. All other combinations will have interference problems. Chelsea P16-45 and -65 pumps can be direct mounted forward if a "4" assembly is used (bulge down), an XK pump flange is used, and is the L,R,S, or U ratio. All other combinations will have interference problems. Other ratios, assemblies, pump flanges and pumps may work if a geared adapter is used, but the PTO may be the lowest component on the truck. It would be vulnerable to damage.

NOTE: The 236 series cannot be used on this transmission unless the truck is equipped with an auxiliary air supply.

NOTE: If a 626, 630 or 645 series geared adapter is used, the PTO input gear is the 5-P-1244 JB gear, and the HY gear is used in the adapter. If a 626XHY, 630XHY or 645XHY Series geared adapter is going to be used, the PTO must be a deep mount (ex: 442Z*JB). Use a 7-A-125 filler block, gaskets to establish .006" -.012" backlash, and a 328170-76X stud kit to mount the PTO to the adapter. Be aware that using a geared adapter will change the direction of PTO rotation, but will not affect the speeds shown above.

NOTE: Refer to Ford Body Builders Book (Power Take-Off Applications SEIC/PTO) for information on removal of a tab on the M60D transmission case. This will help in direct mount pump installations.

NOTE: Ford Super Duty MY 2005 applications with the 6.8L gas engine may have PTO to engine exhaust pipe interference problems. It is recommended that you use an assembly arrangement "3". This still leaves the PTO close to the engine exhaust pipe. Route cable and wiring away from the exhaust pipe. Heat may be an issue for PTO operation due to the proximity of the engine exhaust pipe.

(1) Input Gear Part No. 5-P-1237
(2) Input Gear Part No. 5-P-1245

Parker Hannifin Corporation
Chelsea Products Division
Olive Branch, MS 38654 USA

S6-650 (GM 3600 Cab/Chassis)

LEFT SIDE ONLY

TRANSMISSION GEAR DATA:
L.S. 06-BOLT Opening Gear FORWARD of Centerline
39 Teeth - R.H. HELIX

PITCH LINE TO APERTURE FACE:
0.9330" (23.6982MM)

RIGHT SIDE ONLY

TRANSMISSION GEAR DATA:
R.S. 06-BOLT Opening Gear FORWARD of Centerline
39 Teeth - R.H. HELIX

PITCH LINE TO APERTURE FACE:
0.9330" (23.6982MM)

Caution: Application Approval Required for PTO Output Shaft Speeds Above 2500 RPM

LEFT Side PTO Model	Inter. Torq.	Dir. Rot.	Engine % Fwd.	Engine % Rev.	Filler Block	Adapter Assy.	Stud Kit	RIGHT Side PTO Model	Inter. Torq.	Dir. Rot.	Engine % Fwd.	Engine % Rev.	Filler Block	Adapter Assy.	Stud Kit
ONE SPEED - TWO GEAR - MECHANICAL SHIFT															
442XLHYX-*5 (1)	250	Opp	65				Furnished	442XLHYX-*5 (1)	250	Opp	65				Furnished
442XQHYX-*5 (1)	225	Opp	70				Furnished	442XQHYX-*5 (1)	225	Opp	70				Furnished
442XRHYX-*5 (1)	225	Opp	81				Furnished	442XRHYX-*5 (1)	225	Opp	81				Furnished
442XSHYX-*5 (1)	200	Opp	96				Furnished	442XSHYX-*5 (1)	200	Opp	96				Furnished
442XUHYX-*5 (1)	195	Opp	115				Furnished	442XUHYX-*5 (1)	195	Opp	115				Furnished
442XWHYX-*5 (1)	175	Opp	135				Furnished	442XWHYX-*5 (1)	175	Opp	135				Furnished
442XXHYX-*5 (1)	140	Opp	160				Furnished	442XXHYX-*5 (1)	140	Opp	160				Furnished
ONE SPEED - FORWARD & REVERSE															
340XFHYX-*5 (2)	200	Opp	46	48			Furnished								
352XSHYX-*5 (1)	140	Opp	98	126			Furnished								
GEARED ADAPTERS															
626XHYX-*4JB (1)	250	Eng	0				Furnished								
630XHYX-*4JB (1)	250	Eng	0				Furnished								
645XHYX-*4JB (1)	250	Eng	0				Furnished								

CAUTION: It is required by GM Truck that the 442 Series when mounted on the right side of the transmission must have the direct mount pump, with hard tubing coming out of the rear of the pump, up and over the transmission output shaft, and a heat shield must be installed to cover the PTO and the pump. Order Kit number 329333X for complete pump and heat shield installation parts.

NOTE: Only 442 Series with the CABLE SHIFT option " W " and a SAE "A" 2 bolt output flange "RC" must be used on right side applications. The 442 Series must be "Shaft High" #5 assembly arrangement due to exhaust pipe interference. "RC" field conversion kit number 328591-112X ("XD" to "RC")

NOTE: There is a left and right PTO opening for GM/ ZF S6-650, the LEFT side aperture can be used in 4 x 2 vehicles. There is a interference on the 4 x 4 vehicles due to the front wheel driveshaft on the LEFT side.

NOTE: The 626 and 645 Series adapters will mount to this transmission (LEFT Side Only) with the 5-P-1237 gear in the adapter and the 5-P-1244 gear in the 442 Series. The 442 Series must use a deep mount housing, stud kit 328170-76X and 7-A-125 spacer to mount to the adapter.

NOTE: Parker P16-45/65 pumps can be mounted rearward and direct to the 442 series on the LEFT side if the PTO is a 3 assembly, (bulge up), has the XK or RC flange, and is the F, L, R, S, or U ratio.

NOTE: Wiring harness assembly number 329333-4X can be used on all applications to control engine speed. See owner's manual HY25-1135-M1/US for complete instructions.

(1) Input Gear Part No. 5-P-1237
(2) Input Gear Part No. 5-P-1245

Parker Hannifin Corporation
Chelsea Products Division
Olive Branch, MS 38654 USA

NOTES



Parker Hannifin Corporation
Chelsea Products Division
Olive Branch, MS 38654 USA

NOTES



Parker Hannifin Corporation
Chelsea Products Division
Olive Branch, MS 38654 USA

NOTES

Parker Hannifin Corporation
Chelsea Products Division
Olive Branch, MS 38654 USA

Offer of Sale

The items described in this document and other documents and descriptions provided by Parker Hannifin Corporation, its subsidiaries and its authorized distributors ("Seller") are hereby offered for sale at prices to be established by Seller. This offer and its acceptance by any customer ("Buyer") shall be governed by all of the following Terms and Conditions. Buyer's order for any item described in its document, when communicated to Seller verbally, or in writing, shall constitute acceptance of this offer. All goods, services or work described will be referred to as "Products".

1. Terms and Conditions. Seller's willingness to offer Products, or accept an order for Products, to or from Buyer is subject to these Terms and Conditions or any newer version of the terms and conditions found on-line at www.parker.com/saleterms/. Seller objects to any contrary or additional terms or conditions of Buyer's order or any other document issued by Buyer.

2. Price Adjustments; Payments. Prices stated on Seller's quote or other documentation offered by Seller are valid for 30 days, and do not include any sales, use, or other taxes unless specifically stated. Unless otherwise specified by Seller, all prices are F.C.A. Seller's facility (INCOTERMS 2010). Payment is subject to credit approval and is due 30 days from the date of invoice or such other term as required by Seller's Credit Department, after which Buyer shall pay interest on any unpaid invoices at the rate of 1.5% per month or the maximum allowable rate under applicable law.

3. Delivery Dates; Title and Risk; Shipment. All delivery dates are approximate and Seller shall not be responsible for any damages resulting from any delay. Regardless of the manner of shipment, title to any products and risk of loss or damage shall pass to Buyer upon placement of the products with the shipment carrier at Seller's facility. Unless otherwise stated, Seller may exercise its judgment in choosing the carrier and means of delivery. No deferment of shipment at Buyers' request beyond the respective dates indicated will be made except on terms that will indemnify, defend and hold Seller harmless against all loss and additional expense. Buyer shall be responsible for any additional shipping charges incurred by Seller due to Buyer's acts or omissions.

4. Warranty. Seller warrants that all products sold, other than the 590 Series, conform to the applicable Parker Chelsea standard specification for the lesser period of 2 years (24 Months) from date of service or 2-1/2 years (30 Months) from date of build (as marked on the product name plate). Seller warrants that the 590 Series will conform to the applicable Seller standard specification for the lesser period of 2 years (24 Months) from date of service or 2000 hours of usage. The prices charged for Seller's products are based upon the exclusive limited warranty stated above, and upon the following disclaimer: **DISCLAIMER OF WARRANTY: THIS WARRANTY COMPRISES THE SOLE AND ENTIRE WARRANTY PERTAINING TO PRODUCTS PROVIDED HEREUNDER. SELLER DISCLAIMS ALL OTHER WARRANTIES, EXPRESS AND IMPLIED, INCLUDING DESIGN, MERCHANTABILITY AND FITNESS FOR A PARTICULAR PURPOSE.**

5. Claims; Commencement of Actions. Buyer shall promptly inspect all Products upon delivery. No claims for shortages will be allowed unless reported to the Seller within 10 days of delivery. No other claims against Seller will be allowed unless asserted in writing within 30 days after delivery. Buyer shall notify Seller of any alleged breach of warranty within 30 days after the date the defect is or should have been discovered by Buyer. Any action based upon breach of this agreement or upon any other claim arising out of this sale (other than an action by Seller for an amount due on any invoice) must be commenced within 12 months from the date of the breach without regard to the date breach is discovered.

6. LIMITATION OF LIABILITY. UPON NOTIFICATION, SELLER WILL, AT ITS OPTION, REPAIR OR REPLACE A DEFECTIVE PRODUCT, OR REFUND THE PURCHASE PRICE. IN NO EVENT SHALL SELLER BE LIABLE TO BUYER FOR ANY SPECIAL, INDIRECT, INCIDENTAL OR CONSEQUENTIAL DAMAGES ARISING OUT OF, OR AS THE RESULT OF, THE SALE, DELIVERY, NON-DELIVERY, SERVICING, USE OR LOSS OF USE OF THE PRODUCTS OR ANY PART THEREOF, OR FOR ANY CHARGES OR EXPENSES OF ANY NATURE INCURRED WITHOUT SELLER'S WRITTEN CONSENT, EVEN IF SELLER HAS BEEN NEGLIGENT, WHETHER IN CONTRACT, TORT OR OTHER LEGAL THEORY. IN NO EVENT SHALL SELLER'S LIABILITY UNDER ANY CLAIM MADE BY BUYER EXCEED THE PURCHASE PRICE OF THE PRODUCTS.

7. User Responsibility. The user, through its own analysis and testing, is solely responsible for making the final selection of the system and Product and assuring that all performance, endurance, maintenance, safety and warning requirements of the application are met. The user must analyze all aspects of the application and follow applicable industry standards and Product information. If Seller provides Product or system options, the user is responsible for determining that such data and specifications are suitable and sufficient for all applications and reasonably foreseeable uses of the Products or systems.

8. Loss to Buyer's Property. Any designs, tools, patterns, materials, drawings, confidential information or equipment furnished by Buyer or any other items which become Buyer's property, will be considered obsolete and may be destroyed by Seller after two consecutive years have elapsed without Buyer ordering the items manufactured using such property. Seller shall not be responsible for any loss or damage to such property while it is in Seller's possession or control.

9. Special Tooling. A tooling charge may be imposed for any special tooling, including without limitation, dies, fixtures, molds and patterns, acquired to manufacture Products. Such special tooling shall be and remain Seller's property notwithstanding payment of any charges by Buyer. In no event will Buyer acquire any interest in apparatus belonging to Seller which is utilized in the manufacture of the Products, even if such apparatus has been specially converted or adapted for such manufacture and notwithstanding any charges paid by Buyer. Unless otherwise agreed, Seller shall have the right to alter, discard or otherwise dispose of any special tooling or other property in its sole discretion at any time.

10. Buyer's Obligation; Rights of Seller. To secure payment of all sums due or otherwise, Seller shall retain a security interest in the goods delivered and this agreement shall be deemed a Security Agreement under the Uniform Commercial Code. Buyer authorizes Seller as its attorney to execute and file on Buyer's behalf all documents Seller deems necessary to perfect its security interest.

11. Improper use and Indemnity. Buyer shall indemnify, defend, and hold Seller harmless from any claim, liability, damages, lawsuits, and costs (including attorney fees), whether for personal injury, property damage, patent, trademark or copyright infringement or any other claim, brought by or incurred by Buyer, Buyer's employees, or any other person, arising out of: (a) improper selection, improper application or other misuse of Products purchased by Buyer from Seller; (b) any act or omission, negligent or otherwise, of Buyer; (c) Seller's use of patterns, plans, drawings, or specifications furnished by Buyer to manufacture Product; or (d) Buyer's failure to comply with these terms and conditions. Seller shall not indemnify Buyer under any circumstance except as otherwise provided.

12. Cancellations and Changes. Orders shall not be subject to cancellation or change by Buyer for any reason, except with Seller's written consent and upon terms that will indemnify, defend and hold Seller harmless against all direct, incidental and consequential loss or damage. Seller may change product features, specifications, designs and availability with notice to Buyer.

13. Limitation on Assignment. Buyer may not assign its rights or obligations under this agreement without the prior written consent of Seller.

14. Force Majeure. Seller does not assume the risk and shall not be liable for delay or failure to perform any of Seller's obligations by reason of circumstances beyond the reasonable control of Seller (hereinafter "Events of Force Majeure"). Events of Force Majeure shall include without limitation: accidents, strikes or labor disputes, acts of any government or government agency, acts of nature, delays or failures in delivery from carriers or suppliers, shortages of materials, or any other cause beyond Seller's reasonable control.

15. Waiver and Severability. Failure to enforce any provision of this agreement will not waive that provision nor will any such failure prejudice Seller's right to enforce that provision in the future. Invalidation of any provision of this agreement by legislation or other rule of law shall not invalidate any other provision herein. The remaining provisions of this agreement will remain in full force and effect.

16. Termination. Seller may terminate this agreement for any reason and at any time by giving Buyer thirty (30) days written notice of termination. Seller may immediately terminate this agreement, in writing, if Buyer: (a) commits a breach of any provision of this agreement (b) appointments a trustee, receiver or custodian for all or any part of Buyer's property (c) files a petition for relief in bankruptcy on its own behalf, or by a third party (d) makes an assignment for the benefit of creditors, or (e) dissolves or liquidates all or a majority of its assets.

17. Governing Law. This agreement and the sale and delivery of all Products hereunder shall be deemed to have taken place in and shall be governed and construed in accordance with the laws of the State of Ohio, as applicable to contracts executed and wholly performed therein and without regard to conflicts of laws principles. Buyer irrevocably agrees and consents to the exclusive jurisdiction and venue of the courts of Cuyahoga County, Ohio with respect to any dispute, controversy or claim arising out of or relating to this agreement.

18. Indemnity for Infringement of Intellectual Property Rights. Seller shall have no liability for infringement of any patents, trademarks, copyrights, trade dress, trade secrets or similar rights except as provided in this Section. Seller will defend and indemnify Buyer against allegations of infringement of U.S. patents, U.S. trademarks, copyrights, trade dress and trade secrets ("Intellectual Property Rights"). Seller will defend at its expense and will pay the cost of any settlement or damages awarded in an action brought against Buyer based on an allegation that a Product sold pursuant to this Agreement infringes the Intellectual Property Rights of a third party. Seller's obligation to defend and indemnify Buyer is contingent on Buyer notifying Seller within ten (10) days after Buyer becomes aware of such allegations of infringement, and Seller having sole control over the defense of any allegations or actions including all negotiations for settlement or compromise. If a Product is subject to a claim that it infringes the Intellectual Property Rights of a third party, Seller may, at its sole expense and option, procure for Buyer the right to continue using the Product, replace or modify the Product so as to make it noninfringing, or offer to accept return of the Product and return the purchase price less a reasonable allowance for depreciation. Notwithstanding the foregoing, Seller shall have no liability for claims of infringement based on information provided by Buyer, or directed to Products delivered hereunder for which the designs are specified in whole or part by Buyer, or infringements resulting from the modification, combination or use in a system of any Product sold hereunder. The foregoing provisions of this Section shall constitute Seller's sole and exclusive liability and Buyer's sole and exclusive remedy for infringement of Intellectual Property Rights.

19. Entire Agreement. This agreement contains the entire agreement between the Buyer and Seller and constitutes the final, complete and exclusive expression of the terms of sale. All prior or contemporaneous written or oral agreements or negotiations with respect to the subject matter are herein merged.

20. Compliance with Law, U. K. Bribery Act and U.S. Foreign Corrupt Practices Act. Buyer agrees to comply with all applicable laws and regulations, including both those of the United Kingdom and the United States of America, and of the country or countries of the Territory in which Buyer may operate, including without limitation the U. K. Bribery Act, the U.S. Foreign Corrupt Practices Act ("FCPA") and the U.S. Anti-Kickback Act (the "Anti-Kickback Act"), and agrees to indemnify and hold harmless Seller from the consequences of any violation of such provisions by Buyer, its employees or agents. Buyer acknowledges that they are familiar with the provisions of the U. K. Bribery Act, the FCPA and the Anti-Kickback Act, and certifies that Buyer will adhere to the requirements thereof. In particular, Buyer represents and agrees that Buyer shall not make any payment or give anything of value, directly or indirectly to any governmental official, any foreign political party or official thereof, any candidate for foreign political office, or any commercial entity or person, for the purpose of influencing such person to purchase products or otherwise benefit the business of Seller.

07/14

Parker Hannifin Corporation
Chelsea Products Division
Olive Branch, MS 38654 USA

Chelsea Products

Mechanical Shift 6/8-Bolt

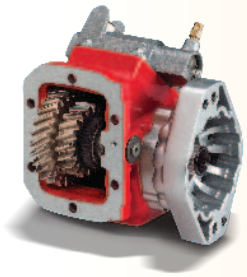
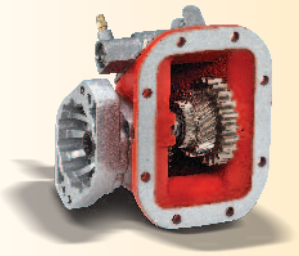
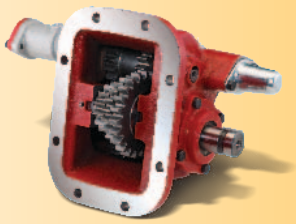


PowerShift 6/8-Bolt


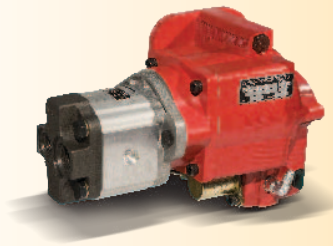
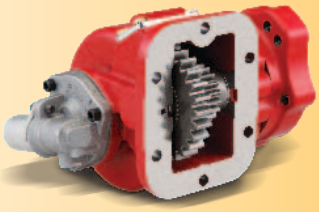
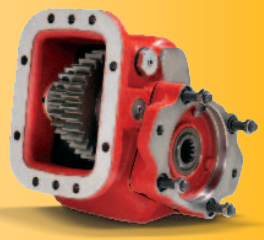

PowerShift 10-Bolt

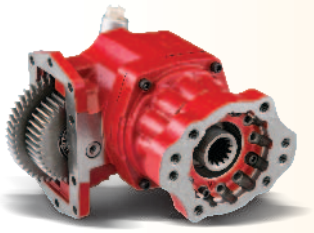
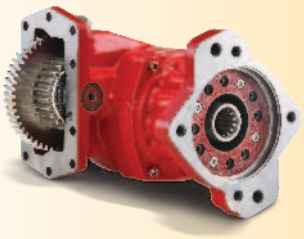


Rear Mount

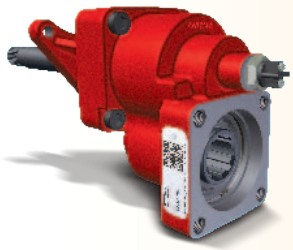
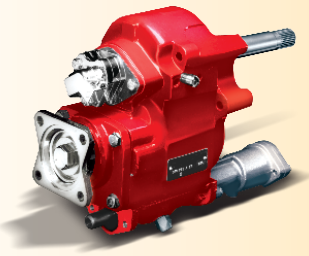

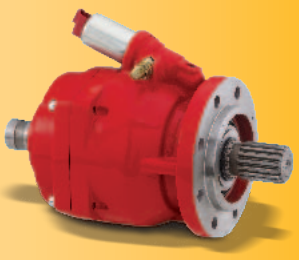

Split Shaft Gear Boxes

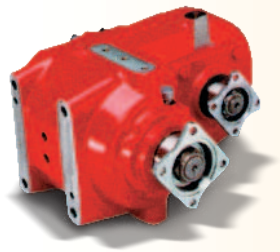
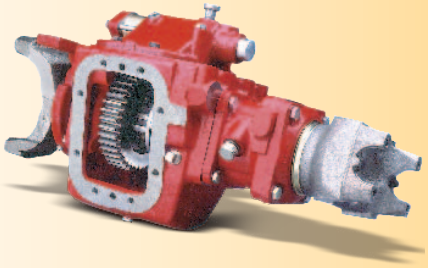


Parker Hannifin Corporation
Chelsea Products Division
Olive Branch, MS 38654 USA

Sales Offices Worldwide

North America

Canada
Parker Hannifin Canada
160 Chisholm Drive
Milton, Ontario L9T 3G9
Tel: (905) 693-3000
Fax: (905) 867-0789

Mexico
Parker Hannifin Corporation
Via de Ferrocarril a
Matamoros 730
Apodaca, N.L Mexico
Tel: (011) 52 81 8156 6000
Fax: (011) 52 80 8156 6076

South Africa

Parker Hannifin Pty Ltd
Sales Company South Africa
10 Berne Avenue
Aeroport
Kempton Park
SOUTH AFRICA
1620
Tel: +9610700
Fax: +3927213

South America

Brazil
Parker Hannifin Industria e Comercio Ltda.
Hydraulics Division
Av Frederico Ritter 1100
District Industrial
94930-000 Cachoeirinha
RS, Brazil
Tel: 55 51 3470 9131
Fax: 55 51 3470 6090

Latin America

Pan American Div
7400 N W 19th St Suite A
Miami, FL 33126
UNITED STATES
Tel: (305) 470-8800
Fax: (305) 470-8809

Europe

Parker Chelsea Products Europe
Parker Hannifin Manufacturing Germany GmbH & Co. KG
Neefestrasse 96
09116 Chemnitz
GERMANY
Tel: + 49 (0) 371 3937-157
Fax: + 49 (0) 371 3937-143

Parker Chelse Products Europe
Parker Hannifin Manufacturing Germany GmbH & Co. KG
Neefestrasse 96
09116 Chemnitz
Germany
UNITED KINGDOM
DY6-7FR
Tel: + 49 (0) 371 3937-157
Fax: + 49 (0) 371 3937-143

South Asia

Chelsea Products
Parker Hannifin India Pvt. Ltd.
TTC Industrial Area, Mahape
Navi Mumbai - 400 709, India
Tel: +91 22 6513 7081 - 85
ext 260
Fax: +91 22 2768 6841

Asia Pacific

Australia
305 Frankston-Dandenong Road
Dandenong South, Victoria 3175
Tel: 61 3 9768-5555
Fax: 61 3 9768-5556

Australia
Parker Hannifin (Australia) Pty. Ltd.
9 Carrington Road
Castle Hill
New South Waltes, 2154
Tel: 61 2 9842-5812
Fax: 61 2 9842-5826

Parker Hannifin Singapore Pte
No 11 Fourth Chin Bee Rd
Jurong Town
SINGAPORE
619702
Tel: (+68) 87 -6300
Fax: (+62) 65 -5125

Parker Hannifin Hong Kong Ltd
8/f, Kin Yip Plaza
9 Cheung Yee Street
Cheung Sha Wan Kowloon
HONG KONG
Tel: (+02) 428-8008
Fax: (+02) 480-4256

Parker Hannifin Motion & Control (Shanghai) Co., Ltd.
280 Yunqiao Road, Jinqiao Export Processing Zone
Shanghai 201206, P. R. China
Tel: (+86) 21 6455 2002
Fax: (+86) 21 5463 1250

Parker Hannifin Beijing
Suite B9-B11
21/F Hanwei Plaza
No. 7 Guanghua Road
Chaoyang District
Beijing 100004, China
Tel: (+86) 10 6561 0520 - 5
Fax: (+86) 10 6561 0526 - 7

Supersedes HY25-3000/US January 2012 HY25-3000/US 2M TGI January 2016

Parker Hannifin Corporation
Chelsea Products Division
8225 Hacks Cross Road
Olive Branch, MS 38654, USA
Phone: (662) 895-1011
Fax: (662) 895-1069
www.parker.com/chelsea

Parker | Chelsea

Your Local Authorized Parker Distributor